United States Patent

[11] **3,632,890**

[72] Inventor **Eduard Herman Hugenholtz**
Ontario, Canada

[21] Appl. No. **853,735**
[22] Filed **Aug. 28, 1969**
[45] Patented **Jan. 4, 1972**
[73] Assignee **U.S. Philips Corporation**
New York, N.Y.
[32] Priority **Aug. 29, 1968**
[33] **Canada**
[31] **028770**

[54] **EMERGENCY TELEPHONE SYSTEM**
6 Claims, 4 Drawing Figs.

[52] **U.S. Cl.** ..... **179/32,** 179/15, 179/17 A
[51] **Int. Cl.** **H04m 1/70**
[50] **Field of Search** ..... 179/2.5 R, 84 YF, 17 A, 17 B, 13, 28, 32

[56] **References Cited**

UNITED STATES PATENTS

2,873,316	2/1959	Power	179/17 B
810,335	1/1906	Hall	179/32
3,491,207	1/1970	Birck	179/2.5 R

Primary Examiner—Ralph D. Blakeslee
Attorneys—Frank R. Trifari and Simon L. Cohen

ABSTRACT: This invention is directed to a communication system of the wired type and is especially suitable for use in emergency situations such as arise in the case of fire, or violence eruptions in cities. The system is adaptable for use with existing fire alarm loop-call systems as the substations of the system may readily replace the standard fire callboxes, i.e., they may be connected in series in existing fire callbox loops with many advantages being provided.

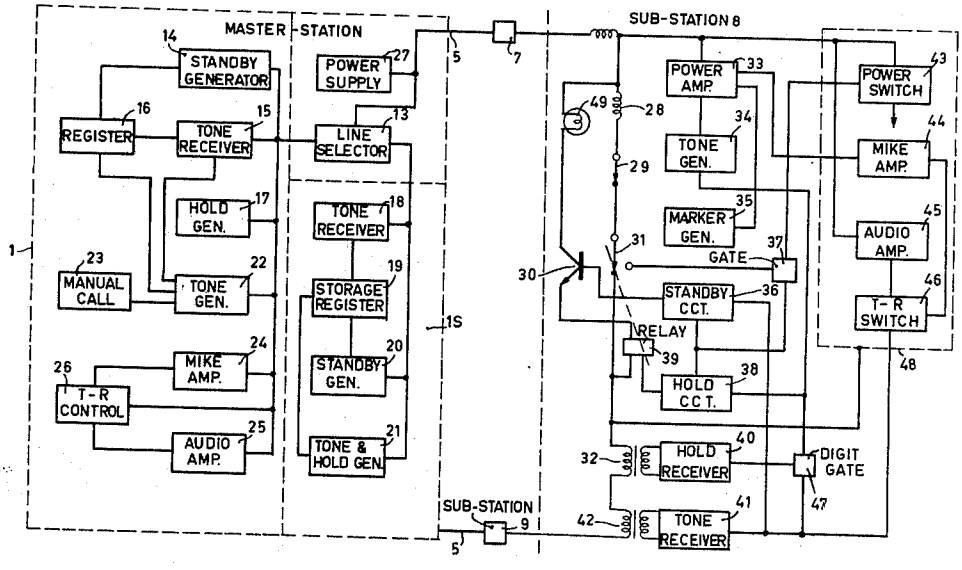

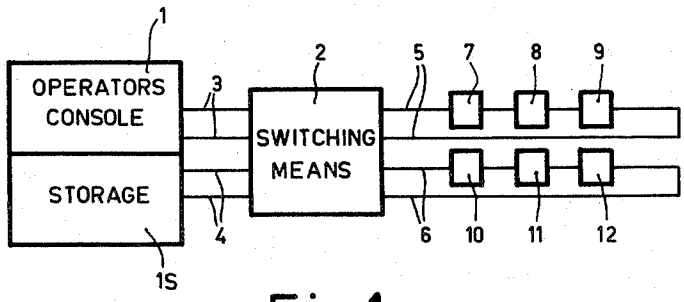

Fig.1

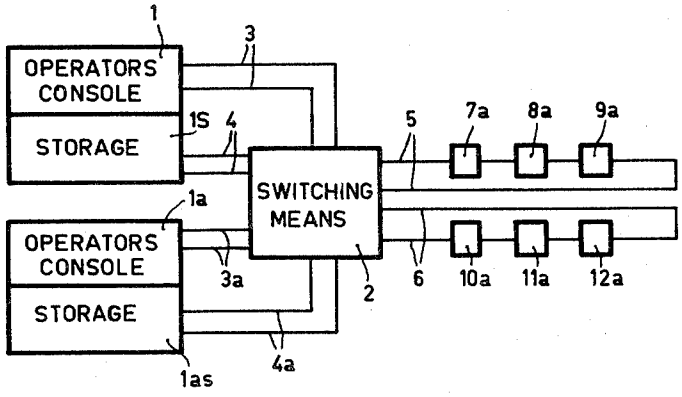

Fig.2

INVENTOR.

EDUARD H. HUGENHOLTZ

BY

AGENT

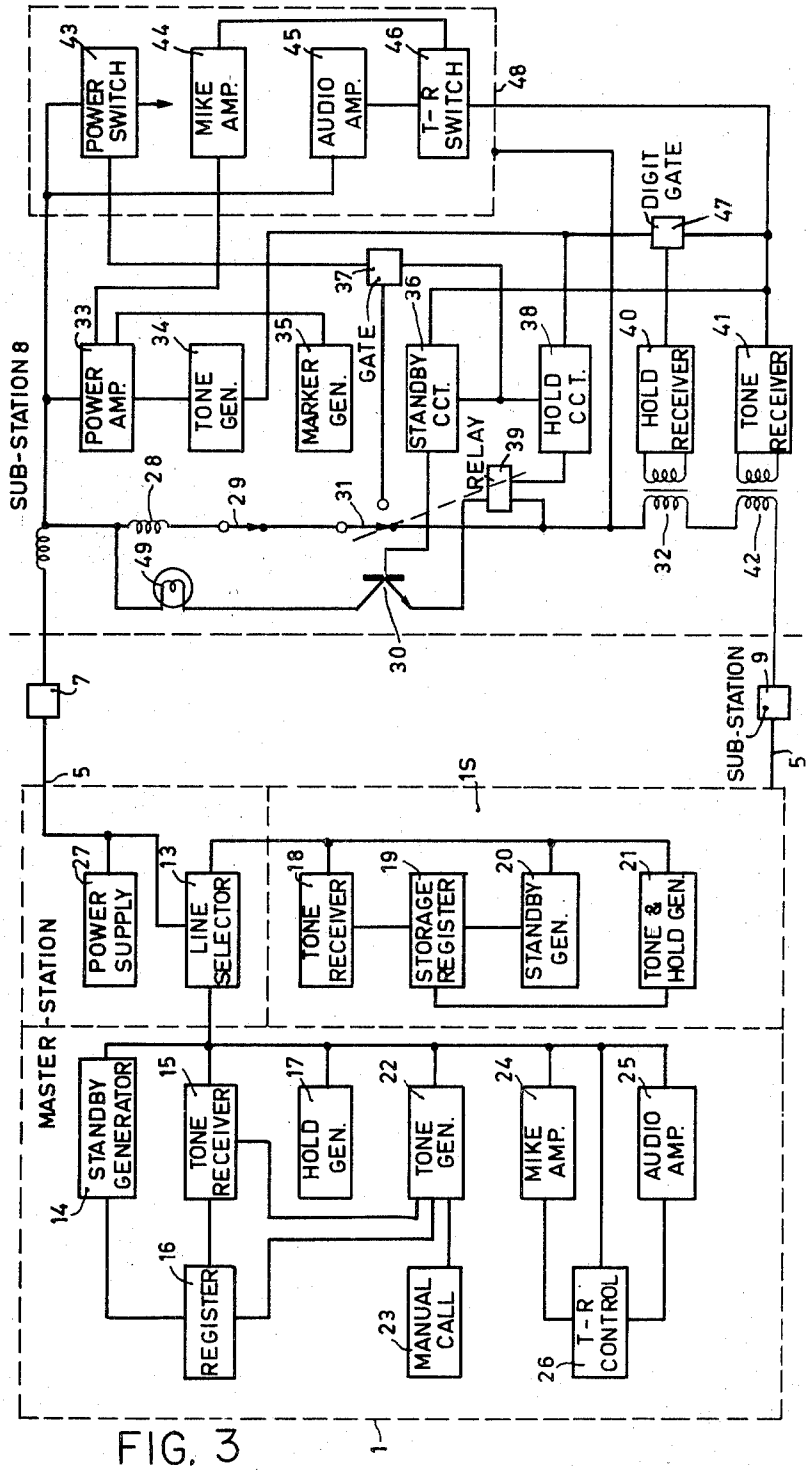

FIG. 3

INVENTOR.
EDUARD H. HUGENHOLTZ
BY
Frank R. Trifari
AGENT.

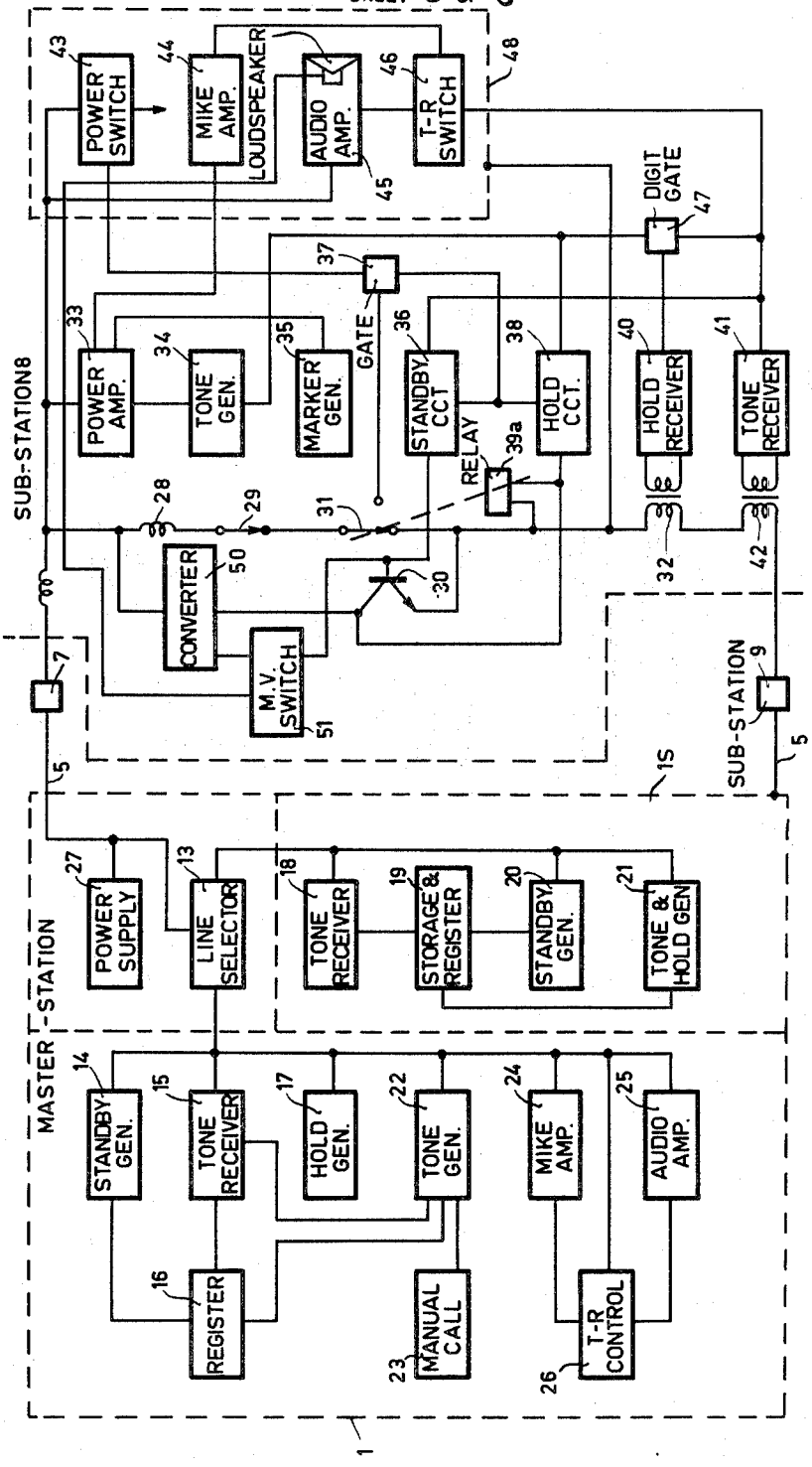

Fig.4

INVENTOR.

EDUARD H. HUGENHOLTZ

BY

AGENT

EMERGENCY TELEPHONE SYSTEM

The present fire alarm systems utilize a mechanical switching arrangement which transmits to the central station, a coded signal indicative of the location of the actuated firebox. However, voice communication with the callbox actuator is not possible and valuable time may be lost in establishing the exact location of the fire.

The present invention overcomes the deficiency of the presently used fire callbox systems in that voice communication is established between a callbox location and a central station and the necessary information can be obtained by such communication.

The invention provides a further advantage in that more than one conversation can be carried on simultaneously over a single loop system although separate facilities at the central station must be provided.

In addition to the above advantage the usual callbox location information is provided at the central station.

In accordance with the invention the mechanical switching mechanism of a callbox is replaced by a voice communication signalling system substation provided with facilities for transmitting to the central station marker and identification signals which establish connection therewith and initiate response by the way of "hold" or "stand-by" signals from the central station. The final establishment of voice communication is preferably under the control of the central station.

More particularly the invention, in a first embodiment, comprises a central station and a plurality of single wire loop circuits connectable thereto, each of the wire loops including one or more substations connected serially in the loop normally present a low impedance in the loop, the substations each being provided with actuating means which when operated initiate the following sequence of operations;

a. a marker signal is generated in the energized substation and transmitted by the loop to the central station to operate the controlled switching means to connect the substation with the central station
b. the substation transmits identifying tone signals to the central station;
c. the central station transmits a marker signal and an identifying tone to the substation to set up a predetermined mode of voice communication between the energized substation and the central station.

In a further embodiment of the invention two or more modes of voice communication are established, i.e., voice and voice frequency modulation, facilitating the carrying on of two or more independent voice communications.

The invention also provides the advantage of standby operation for substation calling in a loop in which communication has already been established with subsequent shift to full operational condition when the established communication has been terminated.

In order to more clearly and fully describe the invention, reference will be made to the figures of the drawings in which:

FIG. 1 shows a block diagram a central station in association with a plurality of loop circuits each containing one or more substations.

FIG. 2 shows a modification of the embodiment of FIG. 1 wherein means are provided for establishing two distinct forms of communication on a single loop, and

FIG. 3 shows a block diagram providing greater detail of a master and substation usable in the systems shown in FIGS. 1 and 2.

FIG. 4 shows a modification of the system shown in FIG. 3.

Referring now to FIG. 1, a central station 1 is shown as being provided with an operators console and a storage. The console is connected to a switching means 2 by line 3 and the storage is connected to switching means 2 by line 4.

In the embodiment of the invention shown, two endless call loops 5 and 6 are shown. Loop 5 is provided with three substations 7, 8 and 9 and loop 6 is provided with three substations 10, 11 and 12. A greater or lesser number of substations may be included in each loop. Providing the operators console is not in use a call from one of the substations on either loop will actuate the switching means to connect that particular loop to the console. If, however, the console was already connected through switching means to one of the loops, a call on the other loop is directed to storage wherein the central identification of the substation calling is displayed. Immediately on termination of the prior call the second loop is connected to the console.

The invention also provides for holding a call on a loop in which a substation is already connected with the operators console. The means of achieving this will be explained hereinafter.

FIG. 2 shows a further embodiment of the system according to the invention wherein two central stations 1 and 1*a*, are provided. In this embodiment two systems of communication are provided so that two conversations may be carried on simultaneously, one with each operator's console. The two communications may take place between the operator's consoles and two substations on the same loop. The switching means 2 operates in the same manner as the switching means in FIG. 1 with the additional feature that the switching senses a marker or pilot signal which indicates the operator's console to which the incoming call should be directed.

The substations of FIG. 2 have an additional facility in that they are provided with two modes of communications, one of which may be direct voice communication, and the other where the intelligence is transmitted as frequency modulation of a medium low-frequency carrier, for example 18 kHz., with a maximum frequency deviation of, for instance, 4 kHz.

For a more complete description of the operation of the system reference will now be made to FIG. 3 wherein the master station and one substation are each shown in block diagram form.

The master station, connected to line 5, is shown as being comprises by three main parts or units, a line selector 13, an operator's console 1 and a storage unit 1*s*. In actual practice a master station would be provided with more than one operator's console, and this is especially true if the system is used by a city fire department, wherein a single fire station is connected with several fire callbox loops. In that event the line selector would be programmed to connect the calling loop to a free operator's console or to the storage unit if all consoles were busy.

The operator's console 1 is comprised by a tone receiver 15 which is sensitive to signals of frequencies which represent digits from 0 to 9 as well as to other frequencies the purpose of which will be referred to hereinafter. The tone receiver supplies digital signal information to a call register which displays the number of a callbox connected to the console by line selector 13.

The tone receiver also supplies digital signal information i.e., the last digit of a callbox number, to a tone generator 22, connected to the line selector 13, which generator is then programmed to transmit corresponding digital information signal to the loop connected to the console. Register 16 can also program the tone generator to cell a callbox whose number is displayed by the register. Additionally, the tone generator can be programmed by the console operator by means of a manual call control 23 which may incorporate among other things, a number dialing system.

Also connected to the line selector 13 are a hold generator 17, an operators microphone amplifier 24 and an audio amplifier 25 which amplifies incoming audio signals when programmed to do so by transmit-receive control 26, which is also effective to alternately control microphone amplifier 24. Control 26 is also directly connected to the line selector 13 since control of the transmit-receive operation of a calling callbox is in the hands of the console operator.

A standby generator 14 is controlled by register 16 to transmit a predetermined standby signal via line selector 13 to a selected loop circuit.

The storage unit 1*s* comprises a tone receiver 18 and a storage and register-display unit 19 to which a calling loop is connected in the event all operator's consoles are busy. The

unit 1s also incorporates a standby generator 20 and a tone generator 21 connected to line selector 13 and therethrough to any loop connected to the storage unit. The tone generator is programmed by register and display unit 19.

Loop 5 shown in FIG. 3 connects the master station to substations 7 to 12, inclusive (FIG. 1), of which only 7, 8 and 9 are shown, substation 8 being shown in block diagram form.

The substation comprises a switching network in the form of a serially connected circuit of inductor 28, a hand operated switch 29, a relay operated switch 31 and the primaries of two coupling transformers 32 and 42. The switching network is in series with loop 5. A further serially connected circuit of an indicator lamp 49, a transistor 30 and a winding on a relay 39 is connected in parallel with inductor 28 and switches 29 and 31. The first of the two circuits just described maintains a low direct current impedance path across the substation so that normally the substation is provided with insufficient voltage for operation. It should be noted that a direct current voltage is normally applied across the ends of a call-loop and a complete direct current path is provided through the shunt circuits of the substations in that loop. The applied voltage acts as the supply for substation operation and can be applied to any particular substation by opening the direct current path by for instance opening switch 31.

In the block portion of the drawings ground or return paths for signals or power supply circuit are not shown except wherein it is necessary in order to explain a particular operational feature. Accordingly, a power amplifier 33, a tone generator 34 and a marker generator 35 are connected directly and in parallel to the positive side of incoming loop 5 as shown. A power switch 43 controls the application of direct current voltage in parallel to a microphone amplifier 44, an audio amplifier 45 and a transmit-receive switch 46. Transmit-receive switch 46 alternately renders the microphone and audio amplifiers operative and the switch 46 in turn is controlled as to its function of operation by the output of a tone receiver 41 which is coupled to the loop by transformer 42.

Tone receiver 41 also is connected to supply controlling signals to a digit gate 47 and a standby control unit 36, which in turn controls the conduction of transistor 30.

A hold receiver 40, coupled to the loop by transformer 32 supplies signals to the digit gate 47 and also to a hold circuit 38. Digit gate 47 and hold circuit 38 are each coincidence type circuits, i.e., two signals must be present simultaneously in order that a predetermined mode of operation takes place.

OPERATION OF THE SYSTEM SUBSTATION CALL.

The substations in one embodiment of the invention are designed as replacements for fire callboxes and in order to prevent confusion the initiation of a call is effected by pulling a handle in the same manner as in the case of a standard callbox.

The pull-handle opens switch 29 to break the substation direct current bypass circuit. Transistor 30 is normally nonconductive and this circuit is also open. As a result of the break in the direct current path the voltage will rise to a value, limited for instance by a zener diode, and power amplifier 33, turns generator 34 and marker generator 35 will be energized. Power switch 43, under control of gate 37, is inoperative and no power is applied to either the microphone amplifier 44 or the audio amplifier 45.

Tone receiver 41, hold receiver 40, and standby circuit 36 and hold circuit 38 controlled thereby are all inoperative in view of the fact that the source of voltage supply therefore is dependent on incoming signals as will appear subsequently.

The rise in voltage applied to marker generator 35 initiates operation of this generator to produce for a short period, in one second, a low frequency oscillatory voltage signal at a predetermined frequency, i.e., 97 cycles per second. This marker signal is transmitted via loop 5 and through bypass circuits of other substations in the loop to the master station line selector 13.

Considering that the operators console is free hold generator 17 is then operative to supply a predetermined low-frequency signal, i.e., 37 cycles per second, to the line selector 13 and to a frequency selective relay system sensitive to the presence of the hold signal in conjunction with the marker signal from the calling substation. The selective relay closes to connect the loop 5 to the operators console and hold generator 17 supplies the hold signal to loop 5.

The initiation of operation of the marker generator in substation 8 in turn initiates, with a short delay, i.e., 200 milliseconds, the production of a series of preprogrammed low-frequency signals or tones each of which represents one digit in the range of 0 to 9. The particular tones produced by substation 8 represent the call number of that substation.

The tone call signal is transmitted by loop 5 to the operators console and subsequently to tone receiver 15 which is provided with a plurality of frequency selective circuits which supply an output signal to the register 16 in the form of digital information. The register responds by displaying the call number of the substation and in conjunction with tone receiver 15 conditions tone generator 22 to transmit to loop 5 a signal corresponding to a selected digit of the cell number, preferably the last.

The hold signal from hold generator 17 of the operators console is fed to hold receiver 40 of substation 8 by connecting loop 5 and coupling transformer 32. The hold signal is selectively rectified in hold receiver 40 to supply a direct current voltage to hold circuit 38 and digit gate 47. The voltage applied to hold circuit 38 is insufficient by itself to energize relay 39 and open switch 31. However, the digit signal, transmitted back to substation 8 is selectively applied by tone receiver 40 to digit gate 47 and in the presence of the hold voltage produced by hold receiver 40, is passed on to hold circuit 38 wherein in combination with the directly applied hold voltage the hold circuit is activated to energize relay 39 and open switch 31. Relay 39 will remain energized with switch 31 open as long as the hold signal is supplied by hold generator 17 at the operators console. It should be noted at this time that the hold signal supplied to line selector 13 is sufficient in itself to hold loop 5 connected to the console after the disappearance of the marker signal from the loop which occurs shortly after the last digit of the substation has been transmitted from the substation.

The opening of switch 31 is such that any further actuation of switch 29 is ineffective. In fact the power supply discharge characteristics of power amplifier 33, tone generator 34 and marker generator 35 are such that the predetermined marker and tone signals are transmitted even though switch 29 may be closed shortly after the initial opening thereof.

Upon the complete energization of relay 39, gate 37 is opened by the presence of the direct voltage supplied thereto via switch 31 and the hold voltage from hold circuit 38 is passed to power switch 43 to actuate same and apply the nominal station voltage drop to mike amplifier 44, audio amplifier 45 and transmit receive switch 46.

If the central station operator is ready to take a call from the actuated substation 8, transmit-receive control 26 can be energized to transmit a selected frequency signal to tone receiver 41 of the substation which supplies the appropriate signal to transmit-receive switch 46. The operator at the central station will usually condition the substation for reception of an incoming signal via loop 5 and audio amplifier 45, connected to a loudspeaker not shown, and indicate by a tone or voice that the substation caller may communicate. Immediately thereafter the substation is conditioned, by a particular tone transmitted from the operator's console via tone receiver 41 of the substation to transmit receive switch 46, to switch microphone amplifier 44 to operative condition and the voice of the substation caller will be transmitted by mike amplifier 44, power amplifier 33, loop 5 to audio amplifier 25 of the central station so that the callers voice is heard at that end. The direction of communication at all times is under control of the central station operator.

When switch 31 is open the power supply circuit through the power switch 43 and the ground system of the audio combination enclosed by dashed line with a connection to transformer 32 acts as an alternating current bypass so that tone and voice frequencies may be supplied to the audio combination, the hold and tone receiver units.

In order to terminate the call between the substation and the central station the central station operator has to merely remove the hold signal from loop 4 for a period long enough to allow relay 39 to fall out and switch 31 close to complete the direct current shunt circuit.

OPERATION WHEN CENTRAL OPERATORS CONSOLE IS BUSY.

Considering now that the central station operator's console is connected to a loop, i.e., connected to substation 8, and a second substation on the same loop, substation 7, calls. The initial operation of the substation will be identical to that which takes place when there is no other substation on the line. The central station receives and registers the call in register 16, and upon registration of the last digit the tone generator 22 sends out to the loop the last digit tone signal. The hold signal is of course already on the loop due to the connection with substation 8 already effected. If no other signal were sent from the central station, substation 7 would be made operational in the regular manner. However, due to the presence of a former call registered in register 16 the last digit of the second call actuates standby generator 14 to produce a predetermined tone frequency which is transmitted to the loop with the last digit tone of substation 7. The standby signal is received in substation 7 and fed to its standby circuit 36. At the same time the hold circuit sensitizes the standby circuit 36 which in the presence of the standby signal turns transistor 30 on so that lamp 27 lights and relay 39 is fully energized.

Conduction of transistor 30 produces a low impedance direct current path through lamp 27, transistor 30, relay 39 and the primary windings of transformers 32 and 42 which, due to the voltage drop in a series impedance 49, lowers the voltage on the substation to such an extent that the communication circuits such as microphone amplifier 44 and audio amplifier 45 are inoperative. The standby circuit 36 is provided with an operational delay so that relay 39 will remain energized for a short period, one or two seconds, after the removal of the standby signal whereas if relay 39 is energized only by the hold circuit it will drop out with a minimum delay. The standby circuit is arranged such that it is retained in operation by the presence of either a hold or a standby signal.

The standby delay is advantageously utilized to provide a busy indication by a periodic removal of the standby signal so that lamp 49 will flash off and on with the removal and reapplication of the standby signal which is of course effected at the central station. Thus the substation operator will be notified that the loop is in use and will wait for it to clear.

When the first substation call is completed the central station operator removes the hold signal from the loop for a short period, i.e., 1 second, and replaces it by the standby signal during the time of the interruption. The interruption of the hold signal allows relay 39 to drop out returning the substation to a nonoperative condition, switch 29 having been reclosed by, for instance, spring action. The substation on standby, substation 7, will maintain its relay 39 energized and with the first disappearance of the standby signal the nonconduction of transistor 30 allows the voltage on that substation to rise and this is the equivalent to opening of its switch 29 with the result that the marker and tone generators of that substation are energized and the call signal is transmitted to the central station through the line selector which remains closed due to an opening delay. Substation 7 will now be placed in an operational condition with the hold signal being reapplied. The call signal of substation 7 will be moved from standby to operational position in register 16 of the central station and thus no standby signal will be applied to the loop until a busy situation is created by a call from another substation on the same loop.

CALL FROM A STATION ON A LOOP WHEN ANOTHER LOOP IS CONNECTED TO THE CENTRAL STATION OPERATORS CONSOLE.

If now it is considered that loop 5 is connected to the operators console and an incoming call appears on loop 6, see FIGS. 1 and 3, line selector 13 will through an appropriate coincidence relay system connect loop 6 to the standby console 1*s* and tone receiver 18 which connects loop 6 to storage and register system 19 to display the call number. Standby generator 20 is placed in operation and along with tone and hold generator 21 the appropriate hold, last digit, and standby signals are transmitted to the substation on loop 6, to put that substation in a standby condition from which it is made operational as soon as the operator's console becomes free. The transfer of the substation loop from storage to operational is not pertinent to the system described and claimed herein and will not be referred to in greater detail — except to point out that the storage system is will only store information regarding calls originating on one loop. The number of storage systems and, of course, operator's consoles will depend on the communication traffic to be allowed for. For instance, it would not be expected that all loops should be in communication at once, hence for a system of five loops two operator's consoles and two storage systems could be provided so that a maximum of four loops could be connected in operation or standby condition. In addition, the register and storage systems would provide for something less than total possible loading.

FIG. 4 shows a modified version of the system shown in FIG. 3, similar components of which bear identical designation numbers.

In the system according to FIG. 3 the busy condition of central station operators console is signified at the substation by the flashing of lamps 49 and since the flashing of the lamps are controlled in unison by the intermittent transmission of a standby signal from the central station a highly fluctuating load is put on the power supply 27 when several substations have been connected and are receiving the busy indication. In addition it is difficult to protect an indicator lamp against damage since it must be located where the light from it is visible.

In order to render the system somewhat more reliable and provide an indication which is more readily recognized as a busy signal use is made of an intermittent tone reproduced by the loudspeaker incorporated in the substation. The loudspeaker is identified as such in FIG. 4 and is shown as being included in audio amplifier block 45.

The substation of FIG. 4 is essentially the equivalent of that of FIG. 3 with the following exceptions.

Indicator lamp 49 has been replaced by a direct current converter 50, a single winding relay 39*a* replaces dual winding relay 39 and a multivibrator switch 51 has been added.

The operation of the standby condition circuitry has been modified so that the standby circuit controls the conduction of transistor 30 which acts as a direct current switch to apply direct current voltage from the loop to a converter 50. Converter 50 utilizes a built-in audiofrequency oscillator-converter to produce a direct current voltage step-up with respect to the loop voltage drop in the converter circuit. The direct current output of the converter is supplied directly to the winding of relay 39 and to a multivibrator switch 51 which is conditioned to the operational status by a voltage supplied from the standby circuit and an audio frequency voltage from converter 50 is supplied through the multivibrator switch 51 intermittently and directly to the loudspeaker in audioamplifier 45 to provide the characteristic busy signal.

In the embodiment shown in FIG. 4 standby circuit 36 may be comprised by an electronic switch whereby its normal position, for instance in a state of nonconduction, transistor 30 is open or conductive. Consequently a voltage applied from hold circuit 38 will produce conduction in switch 38 and nonconduction in transistor 30 when the proper hold and last digit signals are received in the substation — i.e., indicating a free central station.

When a standby signal is received instead of a hold signal, the standby signal ensures that the standby circuit is switched to a state wherein transistor **30** is conductive and the converter becomes operative to supply direct current voltage to switch **51** and relay **39***a* thus securing the standby condition.

When the central station becomes free the register thereof transmits the call number (tones) of the standby substation and the operations that take place are substantially the same as those explained with reference to FIG. **3**. The lack of a standby signal with the last digit tone signal switches the standby circuit so that conduction in transistor **30** ceases with the consequence that the converter voltage is no longer supplied to units **39***a* and **51**

DUAL COMMUNICATION—FM AND VOICE MODULATION.

FIG. **2** shows the block diagram of the system adapted for dual communication, i.e., two simultaneous conversations, one by ordinary voice frequency and the other by voice frequency modulation of a relatively low-frequency carrier, for instance, 18 kHz. With such a dual communication system provision can be made for communication from one substation using both modes of transmission or alternately separate communications between two substations on the same, or different, loops with the voice console and the frequency modulation console. Further communication by either mode may be carried on separately.

The frequency modulation mode of communication may be added to a substation already equipped for voice mode. The circuit and operation for the voice mode remaining the same as described with respect to FIG. **3**.

In order to achieve frequency modulation operation an FM operators console must be provided having substantially the same components as the voice console shown in FIG. **3**. The line selector **2** must then be provided with coincidence line switches sensitive to the presence of a predetermined FM marker frequency, i.e., 108 Hz. and generated at the substation and a locally generated hold signal differing in frequency from that generated by hold generator **17**, for instance, 46 Hz. The presence of the 108 Hz. and 46 Hz. signals will close the coincidence line switch to connect a loop, calling on FM mode, to the FM operators console. The line switching circuit is such that a single loop may be connected simultaneously to each of the voice and FM consoles or these consoles may be connected simultaneously to separate loops.

The FM part of the central station, as shown in FIG. **2**, is provided with storage and, of course, standby for waiting calls on an already connected loop. The tones generated in the FM console for substation control will differ from those used to perform similar control functions in the voice console.

The substation tone receiver, hold and marker circuits are preferably designed to perform a dual function. The microphone and audio amplifiers will be common for both modes of communication. However, these units will be provided with means for connection to the FM transmission and reception circuits of the substation. These have not been shown in FIG. **3**, but would comprise a local oscillator for producing the low-frequency carrier of 18 kHz., and modulation and detection circuits. For dual communication the microphone is connected to the power amplifier and the frequency modulator circuitry and the loudspeaker amplifier is connected to the loop for voice frequencies and to the FM detector for signals received by that means.

What is claimed is:

1. A communication system, comprising a central station and a plurality of substations, means for connecting selected groups of substations in series circuit with a source of direct current, first switch means in each substation for selectively changing the impedance of the substation from a normal low impedance to a high impedance, whereby in response to the high impedance of a selected substation the DC voltage across that selected substation rises, marker signal generating means in each substation for providing a marker signal having a characteristic frequency to the series circuit associated with the selected substation in response to the higher voltage across the selected substation, the central station comprising an operators console, signal controllable second switching means in the central station for connecting the series circuit corresponding to the selected substation to the operators console in response to the marker signal from the selected substation, tone generating means in each substation for providing a series of identifying tones to the operators console through the corresponding series circuit and the signal controllable second switching means in the central station in response to the rising voltage across the selected substation at a time delayed with respect to the transmission of the marker signal, means in the operators console for providing a hold signal through the controlled switching means to the selected series circuit, means in the operators console for providing an operators tone signal specific to the selected substation in response to the substation tone signal from the selected substation, means in the selective substation for providing an audio channel to the series circuit corresponding to the substation in response to the hold signal and operators tone signal from the operators console, means in the selected substation for electrically maintaining the high impedance through the selected substation in response to the hold signal and operators tone signal, means in the operators console for removing the hold signal, and means in the selected substation for deenergizing the audio circuits and for reestablishing the low impedance through the substation in response to the removal of the hold signal.

2. A communications system as claimed in claim **1**, further comprising means in the central station for providing a standby signal to the series circuit corresponding to the selected substation in response to a high impedance across the selected substation and a marker signal from an additional selected substation in the series circuit, and means in the additional selected substation responsive to the standby signal for indicating the existence of a standby signal and preventing the excitation of the audio circuits in the second selected substation.

3. A communication system as claimed in claim **2**, wherein the standby signal is periodically interrupted and in conjunction with indicator means at the second substation indicates the standby condition of that substation.

4. A communication system as claimed in claim **1**, wherein each substation is provided with alternate activating means which by means of a selected marker signal frequency determines the mode of communication between the substation and the central station substation and the central station.

5. A communication system as claimed in claim **2**, wherein the standby signal is supplied to a direct current converter in the substation, which converter supplies direct current voltage to maintain the standby condition of the substation.

6. A communication system as claimed in claim **5**, wherein the alternating current of the direct current converter is supplied through electronic switch means intermittently to a sound reproduction device which provides a characteristic audible busy signal.

* * * * *