March 12, 1929. P. L. MORRIS 1,704,805

PEANUT PICKING MACHINE

Filed Oct. 8, 1923 9 Sheets-Sheet 1

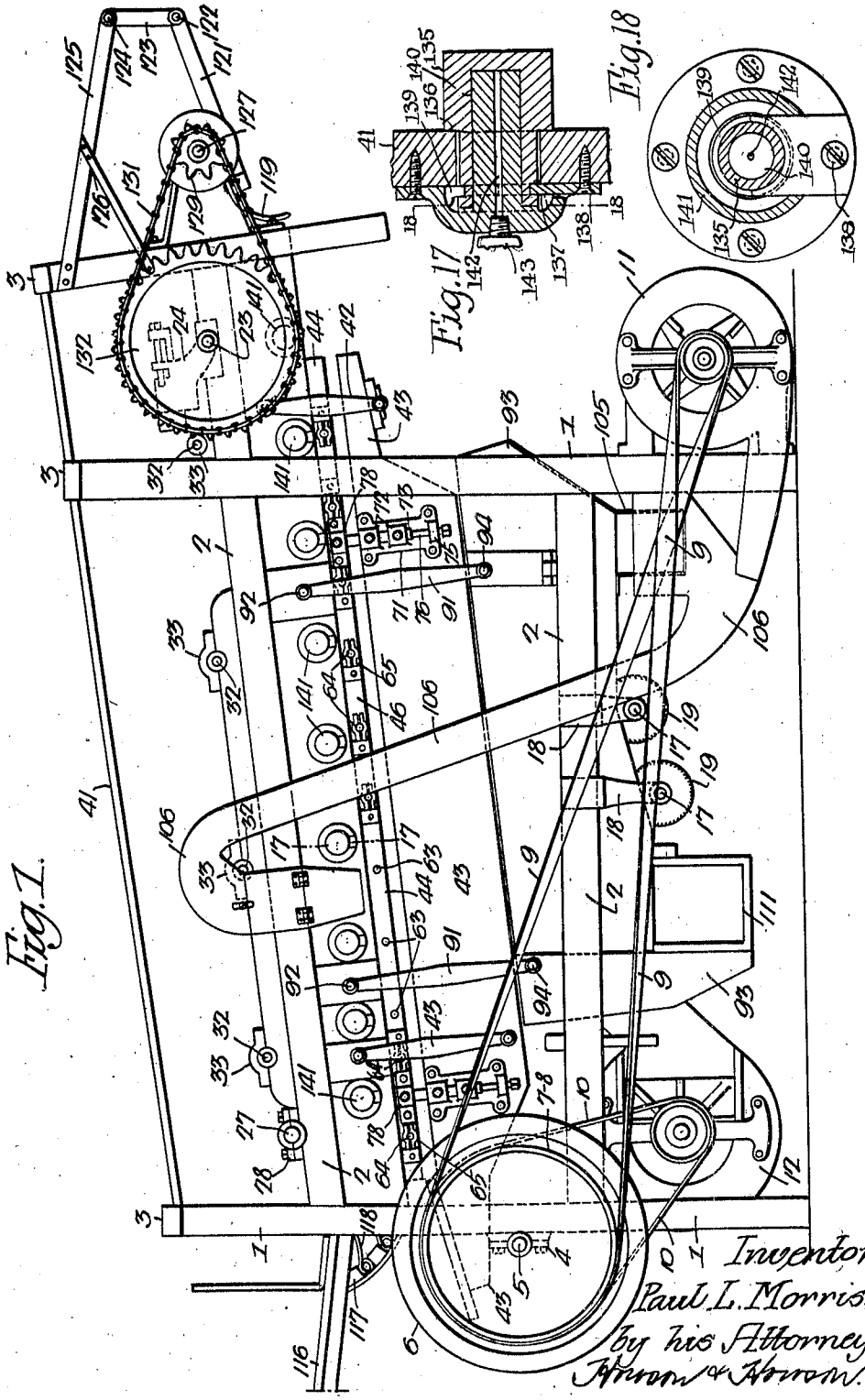

Fig. 1.

Fig. 17

Fig. 18

Inventor-
Paul L. Morris.
By his Attorneys.
Arrow & Arrow.

March 12, 1929. P. L. MORRIS 1,704,805

PEANUT PICKING MACHINE

Filed Oct. 8, 1923 9 Sheets-Sheet 2

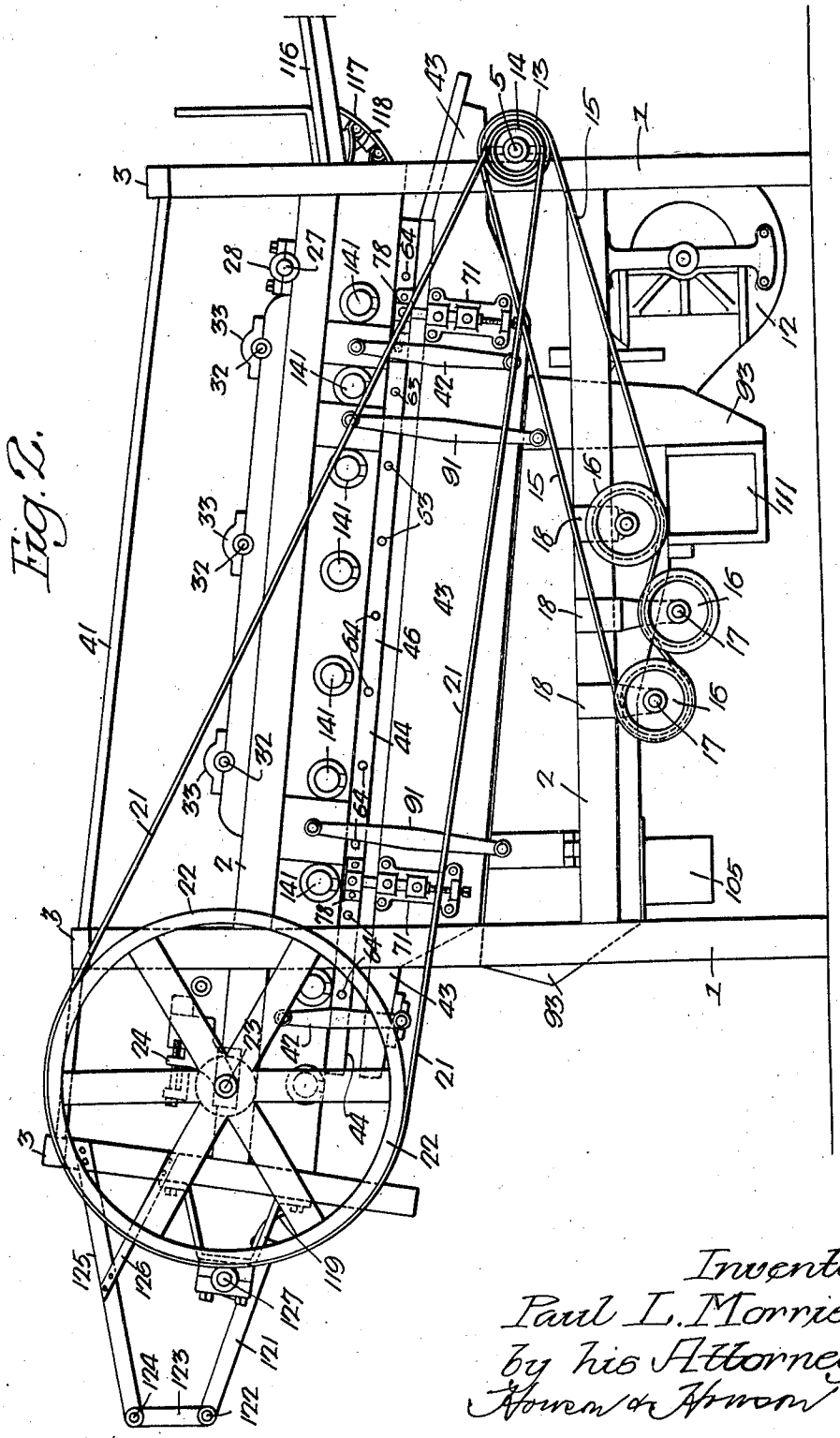

Fig. 2.

Inventor—
Paul L. Morris.
by his Attorneys—
Howson & Howson

March 12, 1929. P. L. MORRIS 1,704,805

PEANUT PICKING MACHINE

Filed Oct. 8, 1923 9 Sheets-Sheet 3

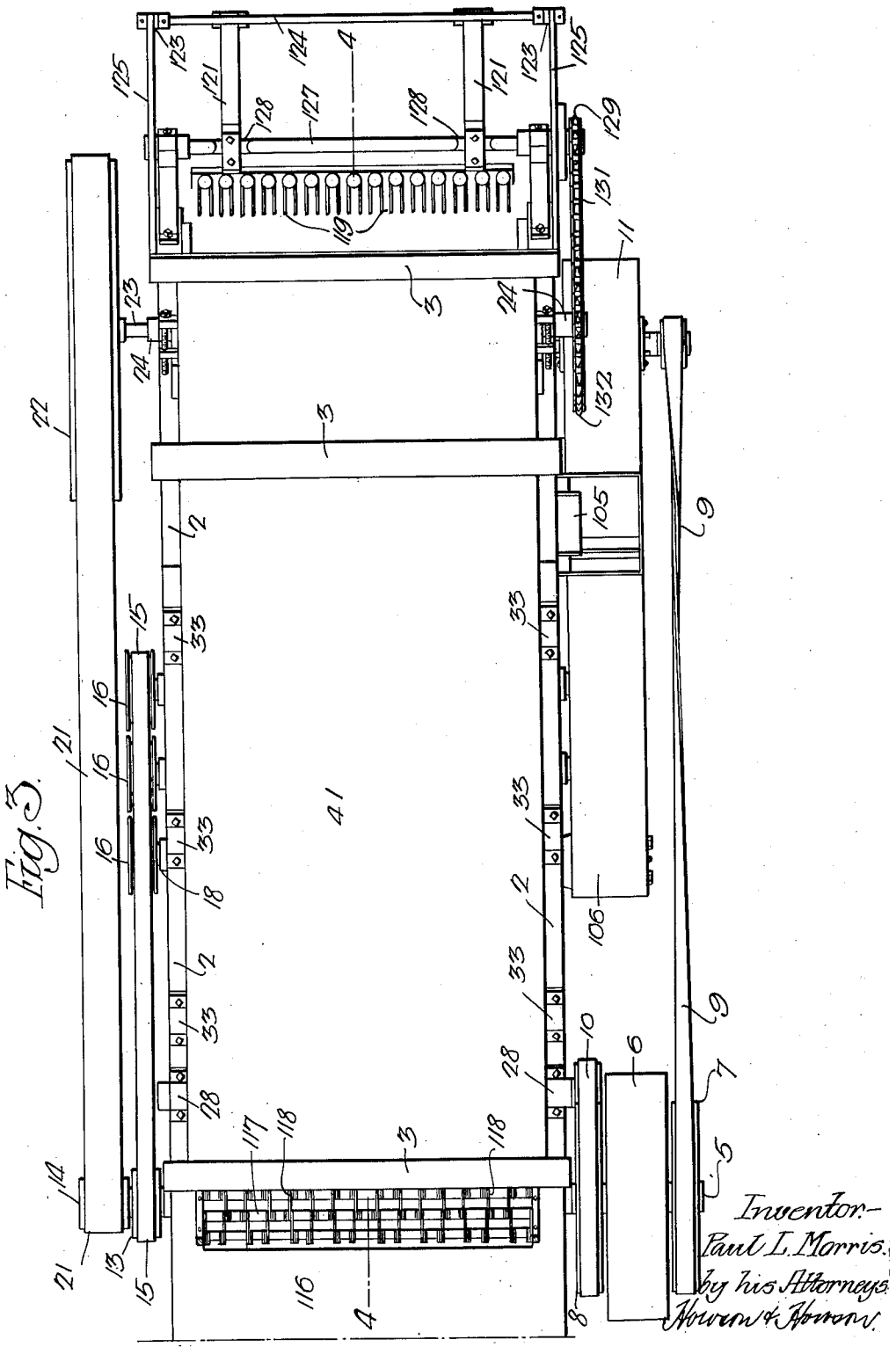

Fig. 3.

Inventor-
Paul L. Morris.
by his Attorneys
Howson & Howson

March 12, 1929. P. L. MORRIS 1,704,805

PEANUT PICKING MACHINE

Filed Oct. 8, 1923 9 Sheets-Sheet 4

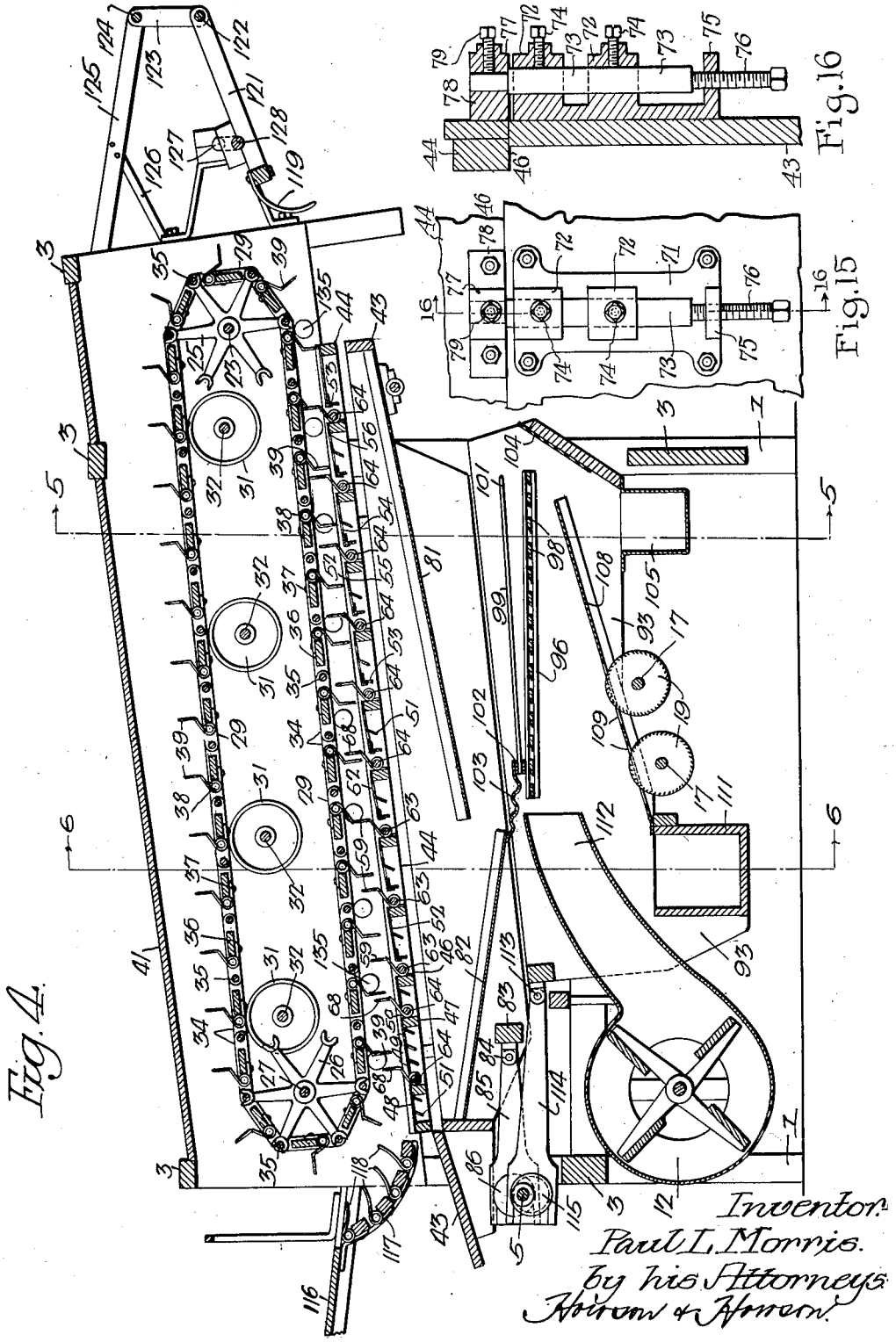

Fig. 4.

Fig. 16

Fig. 15

Inventor:
Paul L. Morris.
By his Attorneys
Morrow & Morrow

March 12, 1929. P. L. MORRIS 1,704,805

PEANUT PICKING MACHINE

Filed Oct. 8, 1923 9 Sheets-Sheet 5

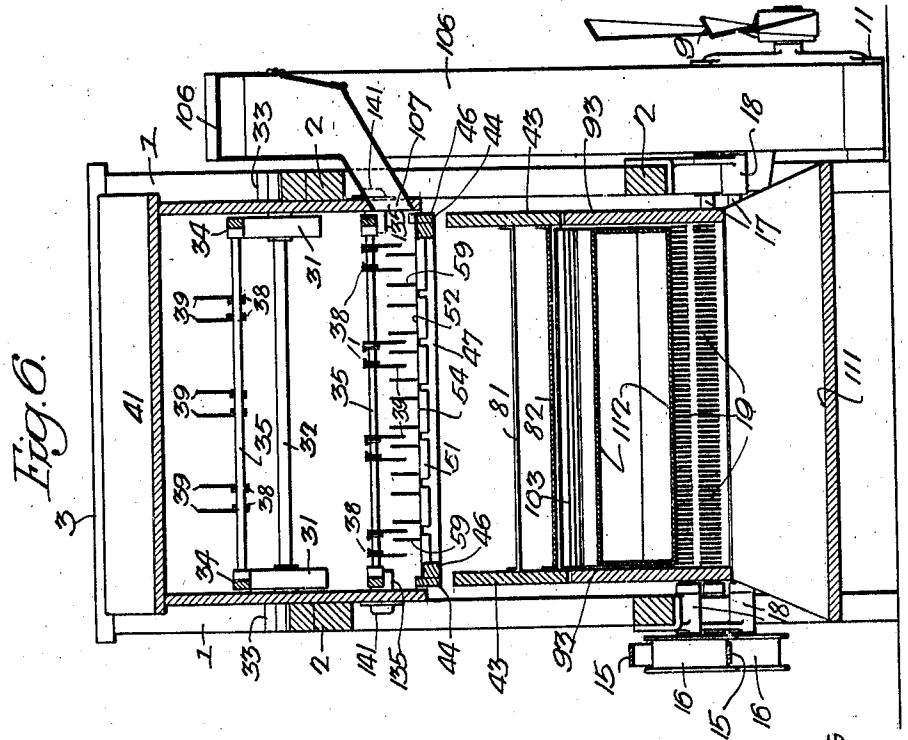

Fig. 6.

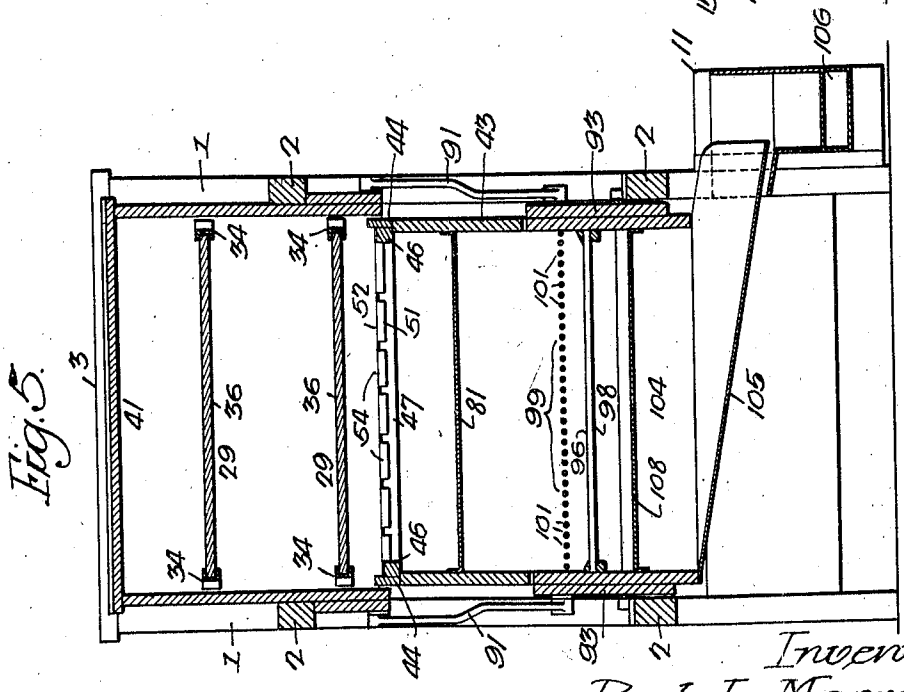

Fig. 5.

Inventor-
Paul L. Morris.
by his Attorneys-
Parsons & Parsons

March 12, 1929. P. L. MORRIS 1,704,805

PEANUT PICKING MACHINE

Filed Oct. 8, 1923 9 Sheets-Sheet 6

Fig. 7.

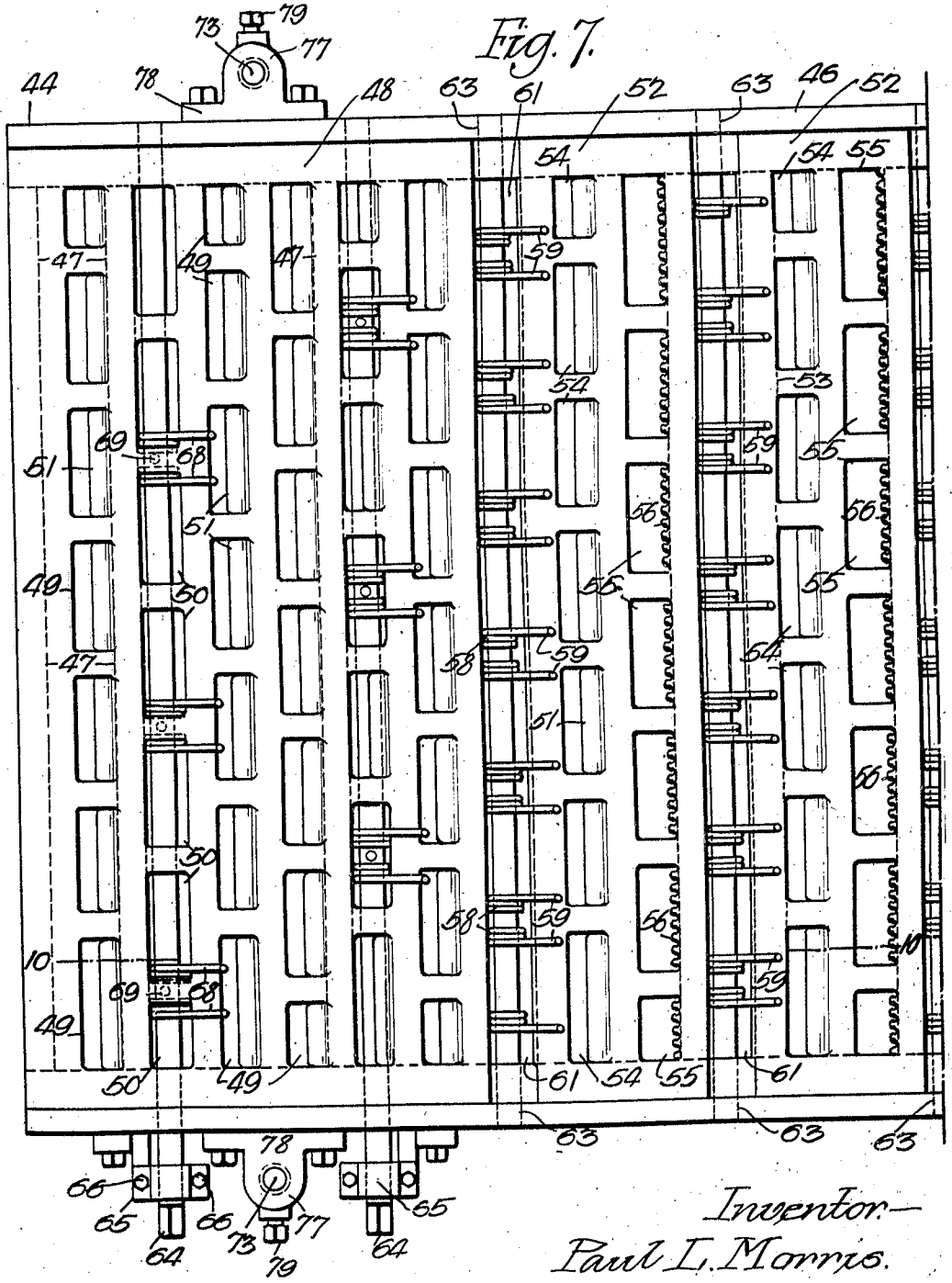

Inventor—
Paul L. Morris.
By his Attorneys—
Howson & Howson.

March 12, 1929. P. L. MORRIS 1,704,805

PEANUT PICKING MACHINE

Filed Oct. 8, 1923 9 Sheets-Sheet 7

Fig. 8.

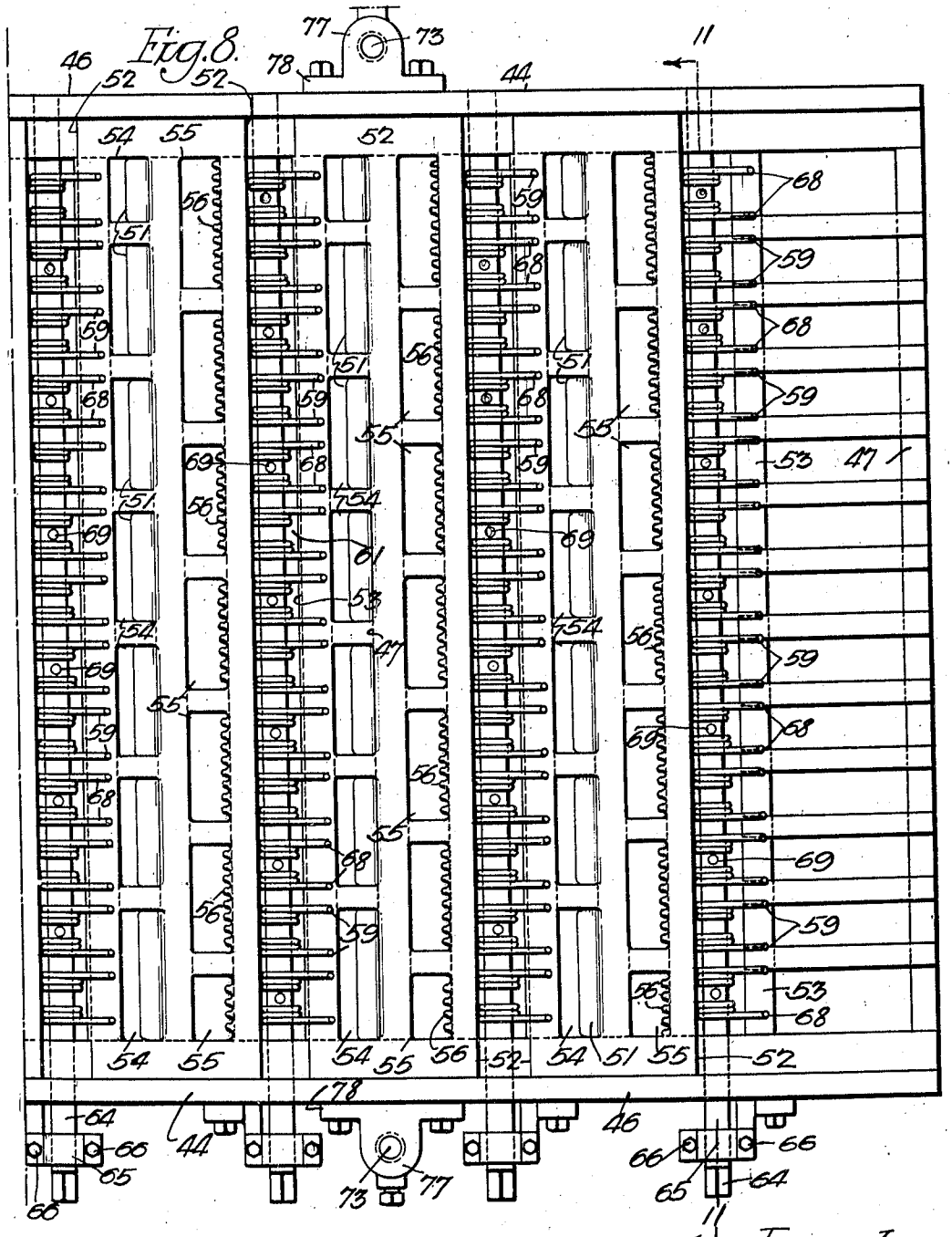

Inventor-
Paul L. Morris.
by his Attorneys.—
Howson & Howson

March 12, 1929. P. L. MORRIS 1,704,805

PEANUT PICKING MACHINE

Filed Oct. 8, 1923 9 Sheets-Sheet 8

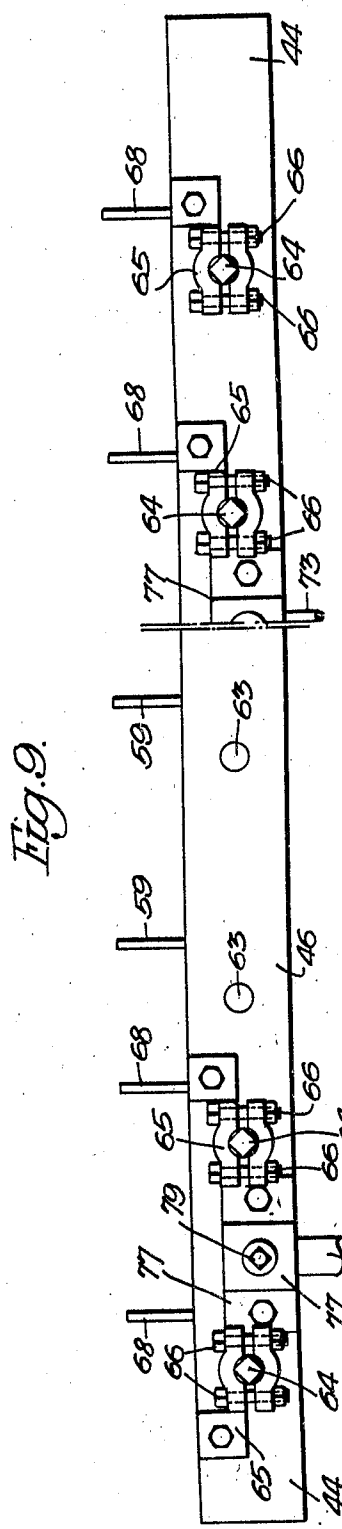

Fig. 9.

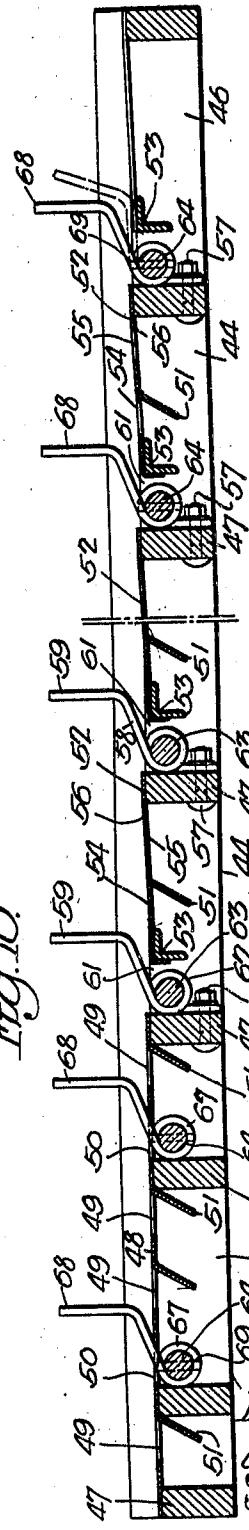

Fig. 10.

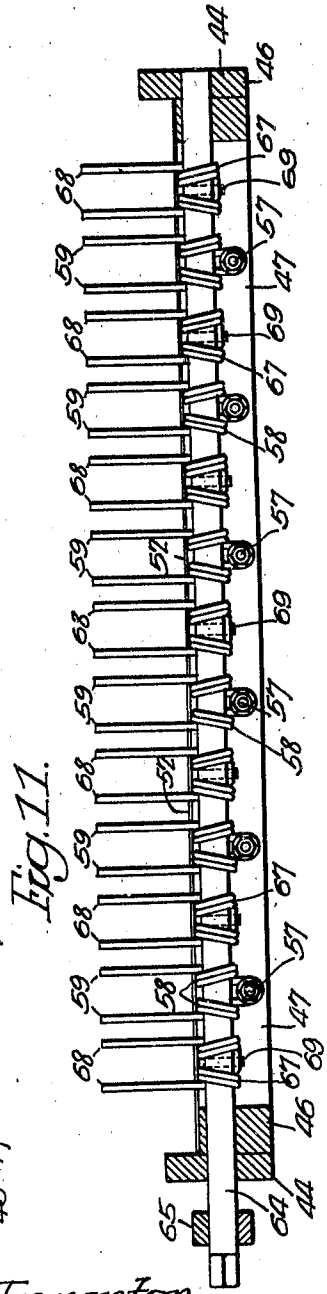

Fig. 11.

Inventor.
Paul L. Morris.
by his Attorneys.
Howson & Howson

March 12, 1929. P. L. MORRIS 1,704,805

PEANUT PICKING MACHINE

Filed Oct. 8, 1923 9 Sheets-Sheet 9

Fig. 12.

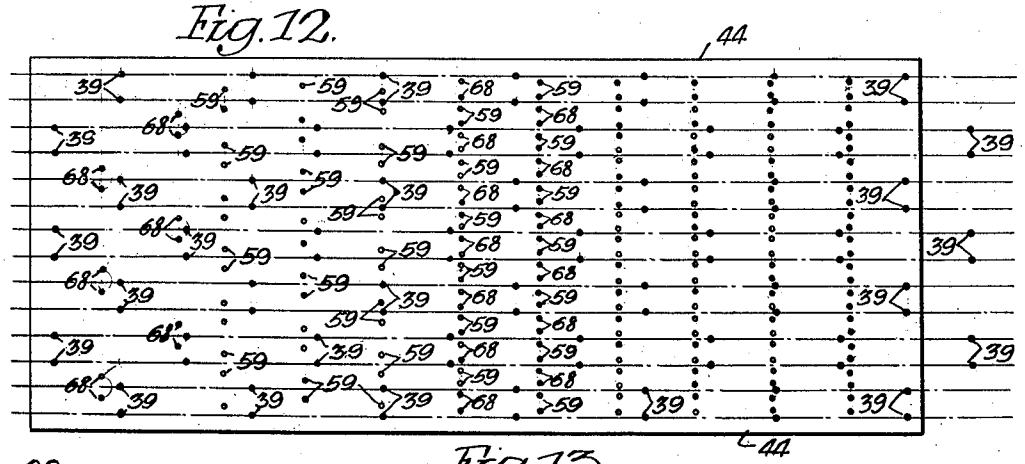

Fig. 13.

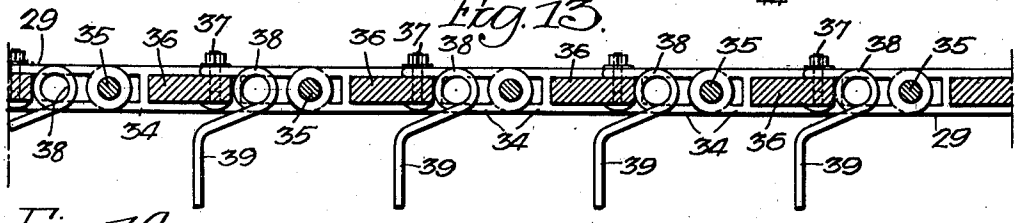

Fig. 14.

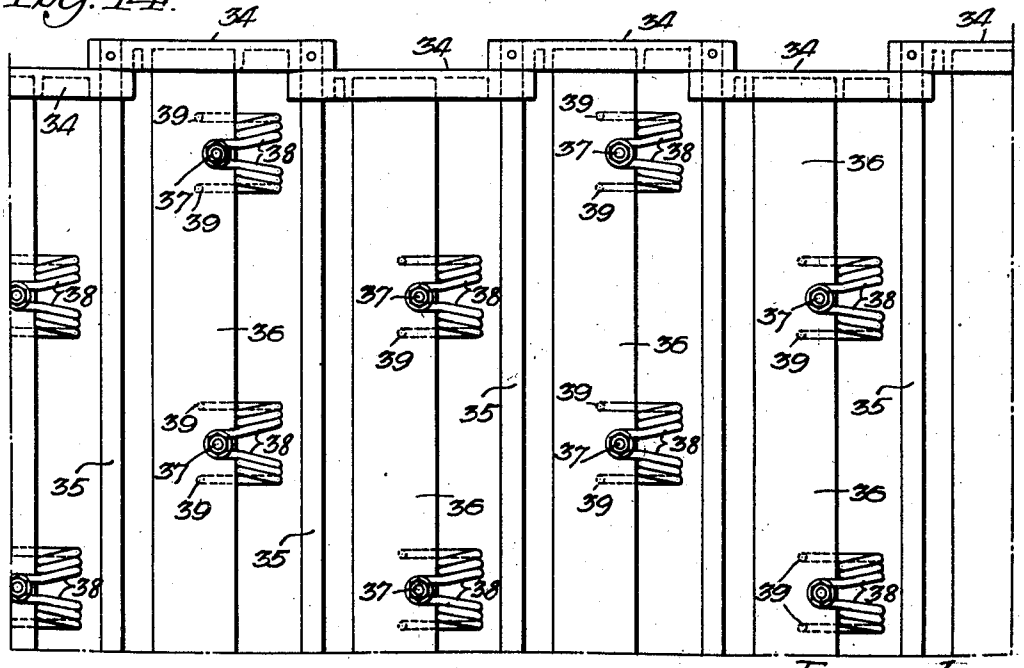

Inventor.
Paul L. Morris.
by his Attorneys.
Arwan & Arwan

Patented Mar. 12, 1929. 1,704,805

UNITED STATES PATENT OFFICE.

PAUL L. MORRIS, OF POTTSTOWN, PENNSYLVANIA.

PEANUT-PICKING MACHINE.

Application filed October 8, 1923. Serial No. 667,265.

This invention relates to machines adapted for picking peanuts from the vines, and the invention resides in certain novel and advantageous details of construction hereinafter set forth.

One of the specific objects of the invention is to provide a machine which is adjustable for different sizes of peanuts whereby the scope of the machine is greatly increased over those machines which are adapted for the picking of but one size only.

In the attached drawings:

Figure 1, is a side elevation of a machine made in accordance with my invention;

Fig. 2, is a side elevation on the reverse side from that shown in Fig. 1;

Fig. 3, is a plan view of the machine;

Fig. 4, is a section on the line 4—4, Fig. 3;

Fig. 5, is a section on the line 5—5, Fig. 4;

Fig. 6, is a section on the line 6—6, Fig. 4;

Fig. 7, is a plan view of one end of the lower rack;

Fig. 8, is a plan view of the other end of the lower rack;

Fig. 9, is a side elevation of the lower rack;

Fig. 10, is a section on the line 10—10, Fig. 7;

Fig. 11, is a section on the line 11—11, Fig. 8;

Fig. 12, is a diagrammatic view showing the relation between the teeth on the lower rack and the teeth on the upper rack;

Fig. 13, is a fragmentary longitudinal section illustrating details of the movable rack;

Fig. 14, is a fragmentary plan view of that portion of the movable rack illustrated in Fig. 13;

Fig. 15, is a fragmentary side elevation of the lower rack adjusting means;

Fig. 16, is a section on the line 16—16, Fig. 15;

Fig. 17, is a section on the line 17—17, Fig. 1, and

Fig. 18, is a section on the line 18—18, Fig. 17.

With reference to the drawings, the machine comprises a main frame consisting of uprights 1, 1, and longitudinal bars 2, 2, and transverse bars 3, 3, respectively. Journaled at what will be termed the forward or intake end of the machine and supported in suitable bearings 4 on the main frame, is a transverse shaft 5 which projects at each end beyond the sides of the main frame, as shown in Fig. 3. The shaft 5 on one projecting end carries a pulley wheel 6 by means of which the shaft may be connected to a suitable external source of power (not shown). This end of the shaft also carries, one at each side of the pulley wheel 6, a pair of pulleys 7 and 8 connected respectively by means of belts 9 and 10 to blowers 11 and 12 suitably supported on the main frame, the blower 11 being located at the rear end of the frame and the blower 12 at the forward or intake end of the frame, as best shown in Fig. 1. The purposes of these blowers will be set forth hereinafter.

On the opposite end of the shaft 5 is a pair of pulleys 13 and 14, the pulley 13 being connected by means of a belt 15, as best shown in Fig. 2, with three pulley wheels 16, 16, 16, two of which are fixed to the ends of transverse shafts 17, 17, journaled in suitable bearings suspended from brackets 18, 18 from the longitudinal cross bars 2. Each of the transverse shafts 17 carries a gang saw 19 of the type well known in the art which are designed and adapted for the picking of small stems or tails from the peanuts after the peanuts have been separated from the vines.

The pulley 14 is connected by means of a belt 21 to a pulley 22 shown best in Figs. 2 and 3, which is mounted on a transverse shaft 23 journaled in adjustable bearings 24 on a rearward extension of the upper longitudinal bars 2. The adjustment of the bearings 24 permits limited movement of the shaft 23 longitudinally of the machine for a purpose described hereinafter. The shaft 23 intermediate its ends carries a pair of sprocket wheels 25, 25. The sprockets 25, 25, together with corresponding sprockets 26, 26, on a shaft 27 journaled in bearings 28, 28, at the forward end of the machine constitute a support for an endless chain belt 29, the upper run of which is supported upon rollers 31, 31, carried on transverse shafts 32, 32, journaled in bearings 33, 33, on the upper longitudinal frame pieces 2, as clearly shown in Figs. 1, 2 and 4.

As best illustrated in Figs. 4, 13 and 14, the conveyer chain 29 is made up of side links 34, 34, secured together by transverse bars 35, 35, which latter mesh with the

sprockets 25 and 26. Each of the links 34 is adapted to support a transverse bar 36 to which is secured, by means in the present instance of bolts 37, resilient elements 38, in the present instance of spring wire, whose ends 39 project outwardly from the conveyer, as clearly illustrated in the aforesaid Figures 4, 13 and 14. The relative arrangement of these spring elements or teeth 39 on the various cross bars 36 is well illustrated in the diagram of Fig. 12, in which the dots shown in black indicate the teeth or projecting ends 39 of the chain belt.

As well illustrated in Figs. 4, 5 and 6, the upper portion of the main frame of the machine in which the endless chain belt 29 is located, and the associated parts is boarded in to form an open-ended, open-bottom hood 41. From the sides of this hood, as best illustrated in Figs. 1 and 2, is suspended by means of rock arms 42, 42, a cradle 43, the arms 42, 42, being pivotally secured at the top to the side plates of the hood and having at the bottom a pivotal connection with the cradle 43. Supported on the cradle 43 at the top is a rack 44, this rack being provided with upwardly extending resilient teeth similar to the teeth 39 on the chain belt 34. The details of the rack 44 and the means for supporting the rack on the cradle 43 are illustrated in Figs. 7 to 11, inclusive, and 15 and 16.

The rack comprises a rectangular frame 46 comprising transverse cross bars 47, 47. Supported at the top of the forward end of the rack is a plate 48, of sheet metal in the present instance, having apertures 49 and 50, the metal of the plate being pressed down as indicated at 51 to form the openings 49, which as shown in Fig. 7 are substantially rectangular in shape, and the apertures 50 being clean cut. Rearwardly of the plate 48 is a series of comparatively narrow transverse plates 52, the forward ends of which are supported upon cross bars 53 on the frame of the rack, and the rearward ends upon the aforesaid cross bars 47, as best shown in Fig. 10. As clearly illustrated, the cross bars 53 are spaced apart from the nearest of the cross bars 47, leaving a longitudinal transverse slot, and the plates 52 are also provided with apertures 54 and 55, the apertures 54 being similar to the apertures 49 in the plate 48 and being similarly formed, and the apertures 55 being clean cut in the same manner as the apertures 50 in the plate 48, but being provided at their forward edges with serrations or teeth 56, the purpose of these teeth being set forth hereinafter.

Secured to the side of each of the cross bars 47, by means in the present instance of bolts 57, is a series of resilient teeth elements 58 whose ends 59 project upwardly through the apertures 50 in the plate 48 and through the longitudinal slots between the cross bars 47 and 53, designated by the reference numeral 61, to form teeth similar to the teeth 39 of the chain belt 29 with which they intermesh. As clearly illustrated in the drawings, the resilient elements 58 are formed in the present instance of spring wire and comprise near their bases loops 62 through which extend circular rods 63 and 64, the difference between the rods 63 and 64 residing in the fact that whereas the rods 63 are mounted in the side bars of the frame and do not project beyond the edges thereof, the rods 64 do project at one end beyond the side bar of the frame, as well shown in Fig. 11, and are provided with a bearing in a bracket 65 secured to the side of the frame through which the said rods project. The journal of this bracket 65 through which the rods 64 extend, as best illustrated in Fig. 9, is so made as to permit tightening around the rod by means of bolts 66. The projecting extremity of each of the rods 64 is also flattened to provide for a socket wrench or other tool by means of which the rods may be rotated, the adjustable bearings 66 constituting a clamp whereby the bars may be locked against accidental angular movement and whereby the bars may be retained in any position to which they may be adjusted.

Each of the rods 64 has secured thereto so as to be movable therewith a series of teeth elements 67 essentially similar to the elements 58 and having their ends 68 extending upwardly to form teeth similar to the teeth 59. These elements 67, as best shown in Figs. 10 and 11, are secured to the rods 64 by means of pins 69. The first two rows of teeth at the forward end of the rack, as clearly illustrated in Fig. 7, are composed of the elements 67 secured to the rods 64. The succeeding three rows of teeth may be composed of the elements 58 which are fixed to the frame and are immovable, while the succeeding rows of teeth, as illustrated in Fig. 11, may comprise both teeth that are fixed to the frame and teeth that are movable on the bars 64. A preferred arrangement of teeth in the rack and their relation to the teeth 39 of the upper rack constituted by the endless chain belt 29 is well illustrated in Fig. 12, in which the teeth of the chain, as previously stated, are designated by the reference numeral 39, while the fixed and adjustable teeth of the lower rack are designated respectively by the reference numerals 59 and 68.

It will be noted that in some instances the fixed teeth 59 alternate with the adjustable teeth 68, and that by the arrangement above described, alternate teeth of certain of the rows may be thrown into or out of action as desired, or whole rows of the teeth may be made operative or inoperative to suit

various conditions. It will further be noted that in the rows of teeth at the rear of the rack, the throwing in of the adjustable teeth so reduces the spaces between the teeth that the rack is made suitable for extremely small peanuts.

The manner in which the rack is supported on the cradle 43 is best shown in Figs. 15 and 16. Secured to each side of the cradle 43 are bracket elements 71 each comprising vertically apertured lugs 72, 72, in which a pin 73 is releasably held by means of set screws 74. Each bracket element 71 also comprises a vertically apertured lug 75 adapted for the reception of a set screw or belt 76 which bears up against and constitutes a further support for the pin 73. The upper end of each of the pins 73, which is of reduced diameter, fits within an apertured lug 77 on a plate 78 secured to the side of the rack 46, and each lug 77 is provided with a set screw 79 which may be tightened against the said reduced end of the pin. A number of these supports is provided at each side of the cradle 43, and the rack 44, and the pins, which are vertically adjustable, constitute an adjustable support for the rack whereby the latter may be elevated above the cradle to adjust the distance between the rack and the lower run of the chain belt 29 as may be found desirable. It will further be noted by reference to Fig. 4, that the rack 44 is more steeply inclined than the lower run of the chain belt 29 whereby the forward end of the rack 44 lies at all times closer to the lower run of the chain belt than does the rear end. It will further be noted that the rack 44 constitutes in effect a floor for the open-ended casing formed by the hood 41.

To prevent the lower run of the chain belt from sagging and to maintain a uniform relation between the upper and lower racks, I provide in each side of the hood 41, as shown in Figs. 4, 17 and 18, a series of rollers 135 which underlie and support the edges of the belt 29. Each of the rollers occupies an opening in the side plate 41 of the hood into which it may be inserted from the inside of the latter, the rollers being held in place by an integral shoulder 136 and by a retaining plate 137 detachably secured by means in the present instance of a screw 138 to the side piece 41 with the upper curved edge of the plate inserted in an annular groove 139 in the outward projecting end of the roller. The rollers 135 are recessed for the reception of a stem 140 on a cap 141 which fits over the outer ends of the rollers and shields the latter from dirt, the stems 140 constituting journals for the rollers. Screws 142 may be employed to secure the caps 141 to the side pieces 41. The caps are apertured through their centers, the aperture 142 extending through the stems, and the outer ends of the apertures are tapped for reception of a grease or oil cup 143 which lubricates the bearing.

The cradle 43 has at the inside a pair of inclined platforms or shelves 81 and 82 whose function will be described hereinafter. The cradle 43 further comprises a cross piece 83 to which is pivotally connected at 84 an eccentric rod 85 which at its outer end connects with an eccentric 86 on the shaft 5 whereby as the latter rotates, the entire cradle 43 with the rack 44 is given a vibratory movement longitudinally of the machine.

Suspended below the cradle 43 by means of rocker arms 91, 91, pivotally attached at 92 to the sides 41 of the hood, is a second cradle 93, the arms 91 being pivotally secured at 94, 94, to the sides of the cradle. The cradle 93 has on the inside a transverse grating 96 composed of lateral bars 98, and mounted in the cradle above this grating is an upper grate 99 composed of more or less flexible and parallel rods 101, see Figures 4 and 5, said rods being supported only at one end, as indicated at 102, see Fig. 4. This end 102 of the grate 99 is connected by means of a flexible connecting element 103 to the lower end of the inclined shelf 82 of the cradle 43. Opposite the forward end of the grate 96 is an inclined wall 104 which terminates at the bottom in the edge of a laterally inclined chute 105 which, as best shown in Fig. 5, extends outwardly beyond the side of the machine frame and communicates with a shaft or duct 106 which extends upwardly along the side of the machine and enters the hood 41 through an opening 107 at a point between the lower run of the chain belt 29 and the lower rack 44, as best shown in Fig. 6. The lower end of the duct 106, as well shown in Fig. 1, is connected with the blower 11.

Underlying the grate 96 is an inclined shelf 108 which extends downwardly and has near the bottom thereof two lateral series of slots, 109, through which project the gang saws 19, 19. The inclined shelf 108 terminates at the edge of a trough 111 which extends laterally of the machine and which has open ends for discharging the picked peanuts from the machine. As best shown in Fig. 4, air from the blower 12 is directed through a spout 112 transversely and upwardly through the grates 96 and 99. Pivotally secured at 113 to the forward end of the cradle 93 is an eccentric arm 114 which is operatively connected with an eccentric 115 on the shaft 5. The eccentric 115 is preferably offset from the eccentric 86 at an angle of 180° whereby the vibrations of the cradles 43 and 93 oppose each other.

The peanut vines from which the peanuts are to be picked are fed to the racks on an

inclined platform 116. To the inner end of this platform is secured a concave 117 having resilient teeth 118, as clearly shown in Fig. 4. The teeth 39 of the upper moving rack engage the vines, and after dragging them through the teeth 118 carry them over the rack 44 and past the teeth 59 and 68 on this rack. In order to prevent the vines from clinging to the teeth 39 after they have reached the end of the rack 44, which would result in the vines being carried up and over the rack 34, I provide at the rear end of the machine an oscillatory cleaning fork 119. This fork is carried on a frame 121 supported at one end upon a shaft 122 which is suspended by means of links 123, 123, from a second shaft 124 mounted in the rearwardly projecting arms 125 of a bracket structure 126 on the upper projecting end of the frame. This bracket 126 also has journaled therein a lateral crank shaft 127, the cranks 128 of which have connection with the side arms of the frame 121. The outer end of this shaft 127 carries a sprocket 129 which is connected by means of a chain 131 to a sprocket 132 on the shaft 23, as clearly shown in Fig. 1. It is obvious that in the operation of the machine the movement of the shaft 23 is passed through the aforedescribed connecting elements to the fork 119 which is given a vertical oscillatory movement adapted to clear the vines which cling to the teeth 39, the vines thus detached dropping to the floor.

In passing over the rack 44, the vines are subjected to the action of the teeth on the upper and lower racks and are so straightened out, the peanuts which are pulled off by the action of the teeth dropping down through the apertures 49, 54 and 55, in the rack 44. Others of the nuts while dragging over the rack 44 fall down into the apertures 55 and are pulled from the vines by means of the teeth 56 at the forward edges of these apertures. Separation of the peanuts from the vines is further assisted by the vibratory motion of the cradle 43.

The peanuts thus passing through the rack 44 fall upon the inclined shelves 81 and 82 and are passed by gravity assisted by the vibration of the cradle over the flexible connector 103 and to the rack 99. The cradle 93 is also in vibration, and as a consequence the rods which make up the grate 99 are given a vibratory movement which causes the loose peanuts to pass through the rods onto the grate 96. Peanuts which still have any material quantity of the vine adhering fail to pass through the grates 99 and 96 and are forced by the air from the blower 12 outwardly over the ends of the latter and against the inclined wall 104, which guides them to the chute 105, from which they are conducted by means of air from the blower 11 upwardly through the duct 106 and between the racks 29 and 44, with the result that the peanuts are removed, the vines passing to the end of the rack 44 and dropping to the floor. Those peanuts which pass through the grates 99 and 96 fall to the inclined shelf 108 down which they pass by gravity and by reason of the vibration of the cradle 93 to the saws 19, 19, which remove such small stems and tails as may still adhere to the peanut, the completely cleaned peanuts then passing into the trough 111 and discharging through the ends of the trough to the sides of the machine.

It will be apparent, as hereinbefore set forth, that the teeth of the rack 44 may be adjusted to give a maximum efficiency in the picking operation, and where extremely small peanuts, such as Spanish peanuts, are to be picked, the extra teeth may be brought into action to thereby adapt the machine for this work.

I claim:

1. In a peanut picker, the combination with an endless toothed rack, of a relatively reciprocating perforated rack positioned below the said endless rack and having teeth adapted to mesh with the teeth of the endless rack, mechanism for operating the endless rack, mechanism for operating said reciprocating rack, and means at both ends of the relatively reciprocating rack for adjusting said rack vertically to regulate the space between it and the said endless rack.

2. In a peanut picker, the combination with an upper endless toothed rack, of a perforated rack mounted below the said endless rack and having teeth adapted to mesh with the teeth of the upper rack, means for feeding vines to the teeth of the endless rack whereby the vines are carried between the racks, and an oscillating rake at the discharge end of the racks adapted to remove adhering vines from the teeth of the endless rack.

3. In a peanut picker, the combination with an upper endless toothed rack, of a perforated rack below the said upper rack and having teeth adapted to mesh with the teeth of said upper rack, mechanism for actuating the endless rack, a crank shaft at the discharge end of said rack, a rake operatively connected with the shaft and adapted to be oscillated so as to remove adhering vines from the teeth of the endless rack, and mechanism for operating the said crank shaft.

4. In a peanut picker, the combination with an endless toothed rack, of a reciprocating cradle established below the rack, a perforated toothed rack adjustably carried by the cradle, means providing for adjustment of the perforated rack with respect to said cradle and toward and from the said

endless rack, mechanism for actuating the endless rack and mechanism for actuating the reciprocating cradle.

5. In a peanut picker, the combination with a pair of relatively movable racks having intermeshing teeth, one of the racks being perforated and adapted to receive a reciprocating motion relative to the other rack, the other rack being adapted to draw the vines through the teeth and over the said perforations of the perforated rack, and finely divided serrations at the edge of said perforations adapted to strip the peanuts from the vines as they are advanced over the rack.

6. In a peanut picker, the combination with a pair of relatively movable racks having intermeshing teeth, one of the racks being perforated and the other rack being adapted to draw vines through the teeth of the perforated rack, a grate adapted to receive material passing through the perforated rack, said grate being adapted to permit the passage of peanuts therethrough but preventing the passage of the vines, and air operated conveyor mechanism for returning the said vines to the racks to be passed for a second time therebetween.

7. In a peanut picker, the combination with a pair of relatively movable racks having intermeshing teeth, one of the racks being perforated and the other rack being adapted to draw vines through the teeth of the perforated rack, a grate adapted to receive material passing through the perforated rack, said grate being adapted to permit the passage of peanuts therethrough but preventing the passage of vine particles, mechanism for returning the said vine particles to the racks to be passed for a second time therebetween, said mechanism comprising a duct adapted to receive the vine particles from the grate and extending upwardly to the toothed racks, and a blower adapted to create a draft of air through the duct for carrying the vine particles upwardly to the racks.

8. In a peanut picker, the combination with a pair of relatively movable racks having intermeshing teeth, one of the racks being perforated and the other rack being adapted to draw vines through the teeth and over the perforations of said perforated rack, means for collecting the material passing through the perforated rack and for separating the loose peanuts from the vine particles, and air operated conveying means for returning the vine particles to the toothed racks to be again passed therebetween.

9. In a peanut picker, the combination with a pair of relatively movable racks having intermeshing teeth, one of said racks being perforated and adapted to have the vines drawn through the teeth thereof and over said perforations, a grate established below the perforated rack and adapted to receive the material passing therethrough, said grate comprising a plurality of resilient strips supported at one end only in parallel relation, means for vibrating the said strips, and means for collecting the peanuts passing between the strips.

10. In a peanut picker, the combination with an upper longitudinally movable toothed rack, of a cradle mounted below the rack, brackets on said cradle, pins adjustable vertically in the brackets, a perforated rack supported by said pins and having teeth intermeshing with the teeth of said longitudinally movable rack, and mechanism for actuating the said movable rack.

11. In a peanut picker, the combination with a pair of relatively movable racks having intermeshing teeth, the teeth of one of said racks being unevenly distributed so that one end of the rack has a greater number of teeth than the other.

12. In a peanut picker, the combination with a pair of relatively movable racks having intermeshing teeth, said teeth being arranged in transverse rows, and the number of teeth on the respective rows of one of said racks diminishing from one end of the rack to the other.

13. A rack for peanut pickers comprising a frame, teeth on said frame arranged in transverse rows, and means for rotating alternate teeth of individual transverse rows to operative and inoperative positions.

14. A rack for peanut pickers comprising a frame, teeth secured to the said frame in a transverse row, said teeth having loop formations, a shaft journaled in said loops, and teeth secured to said shaft and adapted to be moved thereby into and out of a position corresponding to that of the teeth secured to the frame.

PAUL L. MORRIS.