(No Model.) 2 Sheets—Sheet 1.

C. B. ALLEN.

GATE OPERATING DEVICE FOR PNEUMATIC DESPATCH TUBES.

No. 590,784. Patented Sept. 28, 1897.

FIG. 1

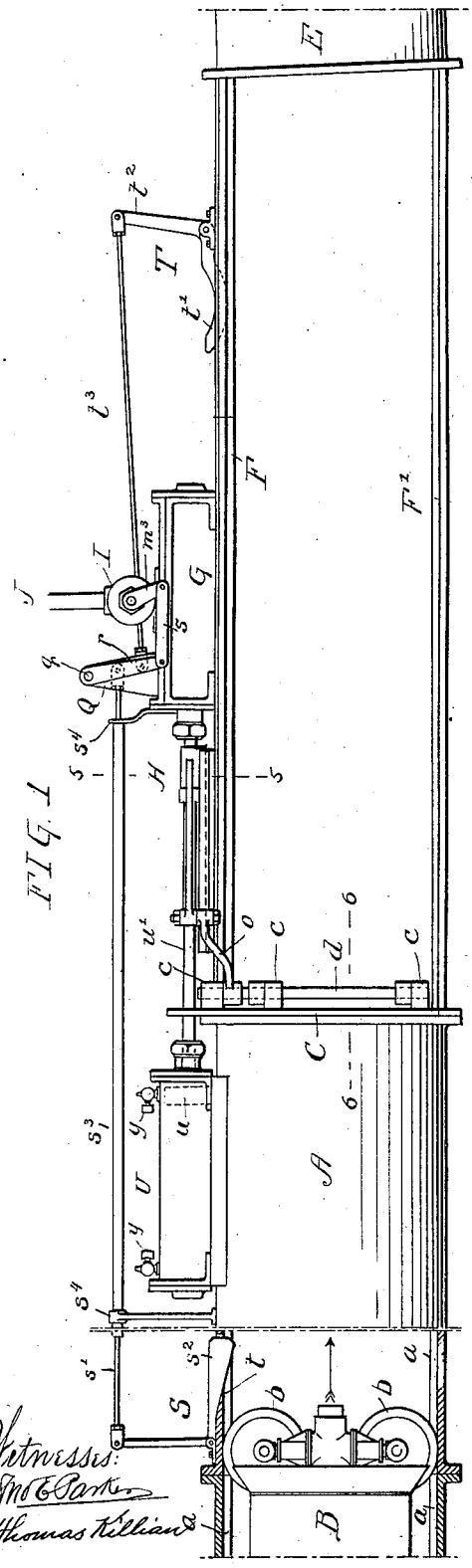

FIG. 2

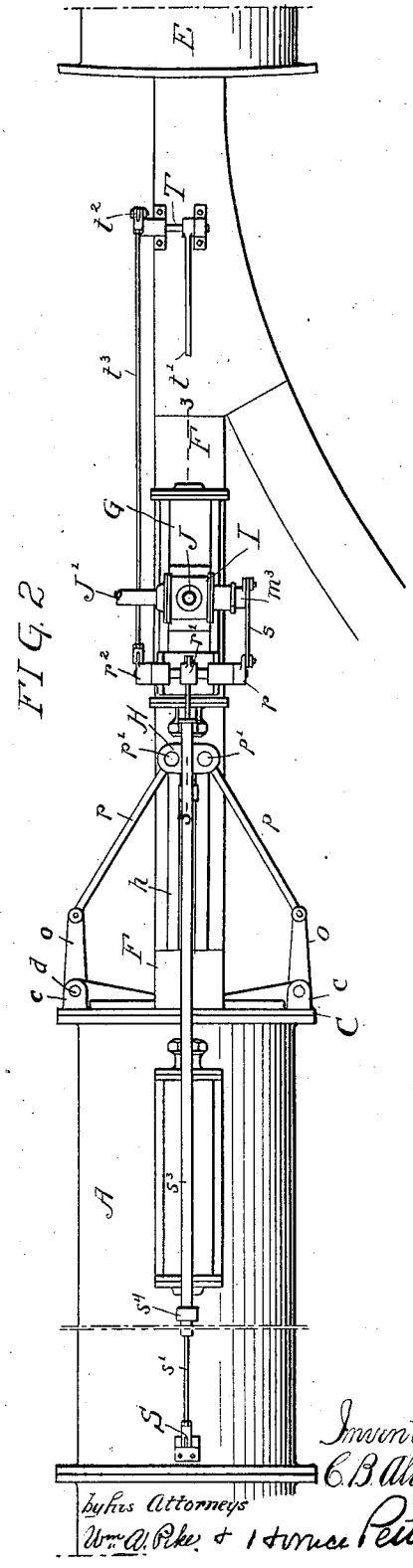

Witnesses:
Jno. C. Parker
Thomas Killiard

Inventor:
C. B. Allen
by his Attorneys
Wm. A. Pike & Horace Pettit

THE NORRIS PETERS CO., PHOTO-LITHO., WASHINGTON, D. C.

(No Model.) 2 Sheets—Sheet 2.

C. B. ALLEN.

GATE OPERATING DEVICE FOR PNEUMATIC DESPATCH TUBES.

No. 590,784. Patented Sept. 28, 1897.

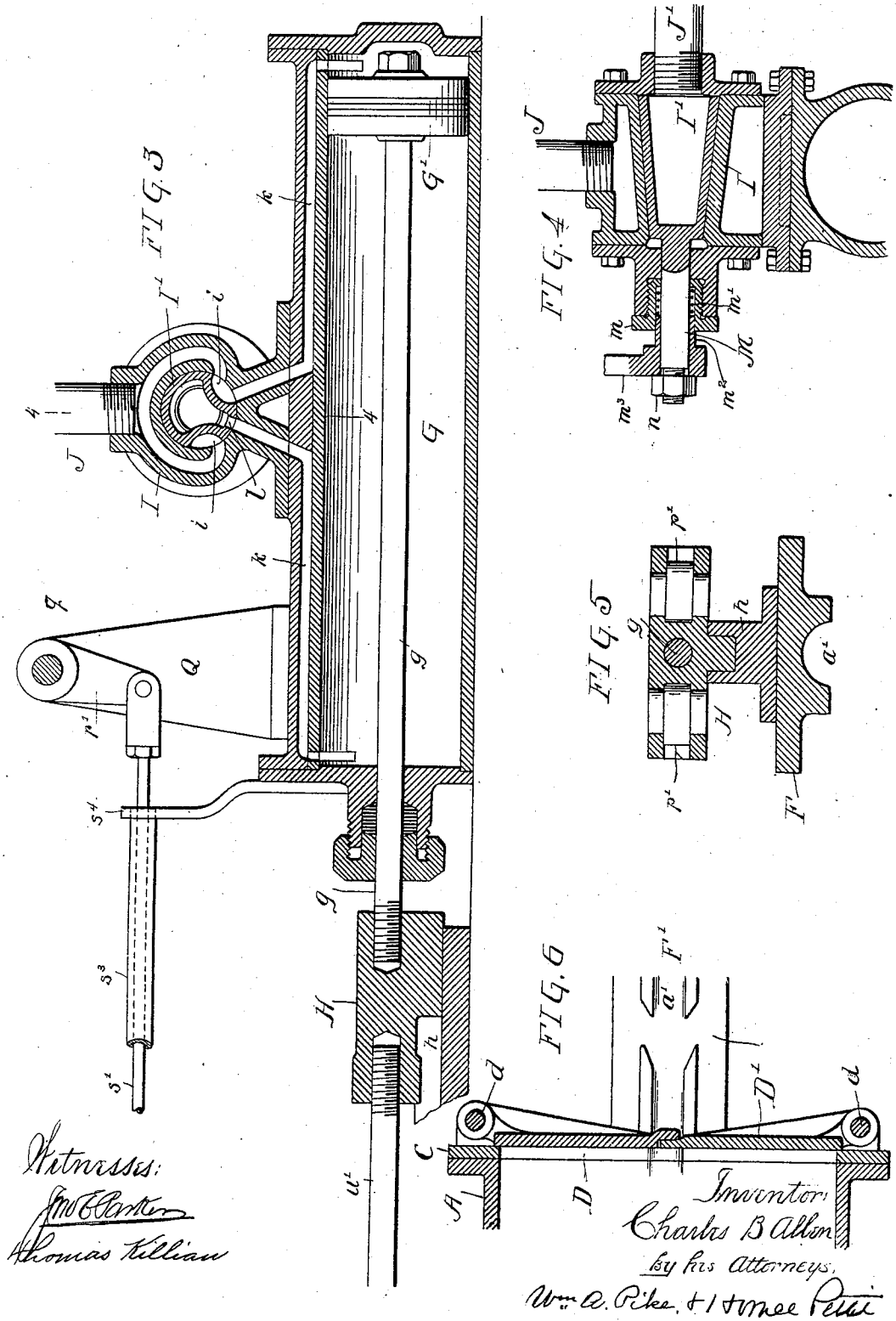

Witnesses:
Jno. E. Parker
Thomas Killian

Inventor:
Charles B. Allen
by his Attorneys,
Wm. A. Pike & Horace Pettit

THE NORRIS PETERS CO., PHOTO-LITHO., WASHINGTON, D. C.

UNITED STATES PATENT OFFICE.

CHARLES B. ALLEN, OF BURLINGTON, NEW JERSEY.

GATE-OPERATING DEVICE FOR PNEUMATIC-DESPATCH TUBES.

SPECIFICATION forming part of Letters Patent No. 590,784, dated September 28, 1897.

Application filed January 11, 1897. Serial No. 618,724. (No model.)

To all whom it may concern:

Be it known that I, CHARLES B. ALLEN, a citizen of the United States, and a resident of Burlington, State of New Jersey, have invented certain new and useful Improvements in Gate-Operating Devices for Pneumatic-Despatch Tubes, of which the following is a full, clear, and exact description, reference being had to the accompanying drawings, forming part of this specification.

My invention relates to certain improvements in pneumatic-despatch tubes, and has for its object to provide an improved form of operating device for effecting the opening and closing of a gate or gates at the end of a tube, as more fully set forth hereinafter.

In the accompanying drawings, Figure 1 is an elevation of a portion of a pneumatic-despatch-tube system, illustrating a gate-operating mechanism in accordance with my invention. Fig. 2 is a plan view of the same. Fig. 3 is a sectional elevation, on an enlarged scale, on the line 3 3, Fig. 2. Fig. 4 is a transverse sectional elevation on the line 4 4, Fig. 3. Fig. 5 is a transverse sectional elevation on the line 5 5, Fig. 1; and Fig. 6 is a sectional plan view of the gates on the line 6 6, Fig. 1.

In the operation of pneumatic-despatch-tube systems it has been found advisable to employ closing gates or valves at the exit end of the tube to prevent the entrance to or escape of air from the tube and in order that a cushion of air may be formed at the end of the tube to reduce the speed of travel of the carrier, so that when it emerges from the tube its speed will be reduced to such an extent that it will travel but a short distance before stopping at the receiver-station.

In carrying out my invention I employ at the exit end of the tube one or more hinged gates or doors under the control of a pressure-cylinder operated by steam, air, or other fluid to open the doors to permit the discharge of the carrier and to automatically close the same after the carrier has been discharged.

Referring to the drawings, A represents the end section of a pneumatic-despatch tube, in which may travel a carrier B of any desired character, the carrier in the present instance being provided with supporting and guiding wheels *b*, adapted to travel in internal trackways or guides *a*. The internal construction of the tube and the construction of the carrier form no part of my present invention, and it will be understood that any form of tube and any form of carrier, either with or without wheels, may be employed.

To the flanged end of the tube-section A is secured a ring C, provided with lugs *c*, through which pass vertical spindles or bolts *d*, forming pivots for two doors D D′, which swing upon the pivots to close the end of the tube, or may open to permit the discharge of the carrier. The meeting edges of the doors at the vertical center of the tube preferably overlap, as shown in Fig. 6, so as to form a practically air-tight closure.

At some distance from the end of the tube is a chamber E for the reception of the carrier, the tube and chamber being joined by upper and lower guiding-rails F F′, which in the present instance are grooved, as at *a′*, Fig. 5, to correspond to the grooved trackways *a* of the pneumatic tube and to provide for the proper guidance of the wheels *b* of the carrier. Where a carrier without wheels is employed, the grooved tracks may be dispensed with and a series of three or more bars may be placed at suitable intervals and extending from the tube to the receiver to guide the carrier in its passage from one to the other.

Secured to the upper surface of the guide-rail F is a power-cylinder G, in which is a piston G′, connected by a rod *g* to a cross-head H, adapted to guideways *h*, also secured to the rail F. Above the cylinder is valve-casing I, in which is placed a conical valve I′, having ports *i*, which may be placed in communication with the pressure-supply pipe J to effect the operation of the piston, the partial rotation of the valve bringing one or other of the ports *i* into such position as to afford a passage for the steam, air, or other fluid from the supply-pipe through the valve and through the ports *k*, leading to the opposite ends of the cylinder G. The valve I′ is hollow and at one end communicates with an escape-pipe J′, screwed into the head of the valve-casing, and is also provided with an escape-port *l*, into which the fluid may escape

from the cylinder to the pipe J′ and thence to the outer air. One end of the valve I′ is provided with a spindle M, passing through the end of the valve-casing and through a cup m, in which is contained a compression-spring m', bearing at one end against the bottom of the cup and at the opposite end against an annular flange or collar m^2, preferably forming part of an arm m^3, secured to the spindle M by a nut n in such manner that it may effect the rotation of the valve, while the turning of the nut will effect an increase or decrease in the pressure of the spring m' and thus keep the valve tightly seated.

To the pivot-bolts d of the doors are secured levers o, the ends of which are connected by rods p to pivot-blocks p', carried by the cross-head H, the longitudinal travel of the cross-head by its piston G effecting the opening and closing of the doors D D′.

In standards Q, secured to the top of the pressure-cylinder, is mounted a rock-shaft q, to which are rigidly secured three arms r r' r^2, the arm r at one end of the shaft being connected by a link s to the end of the arm m^3 of the valve I′ and the arm r' being connected by a rod s' to one arm of a bell-crank trip-lever S, pivoted at the point of bifurcation to the upper surface of the pneumatic tube, the opposite arm s^2 of the lever extending down through an opening t in the upper surface of the tube into the path of the upper carrier-wheel b, the passage of the carrier moving the arm of the lever in a vertical direction and effecting the movement of the valve through the connecting-rod s', and s, and levers r', r, and m^3. To protect the rod s', the latter is guided in a tube s^3, supported by standards s^4, as shown.

At a point on the upper track F near the receiver-chamber is pivoted a bell-crank lever T, having one arm t' projecting down through an opening in the trackway into the path of wheeled carrier and its opposite arm t^2 being connected by a rod t^3 to the lever r^2, the passage of the carrier across the arm t' effecting a movement of the valve I′ in a direction opposite to that given the valve by the operation of the opening trip-lever S.

In order to avoid any sudden action of the pressure-cylinder, I provide on the upper surface of the pneumatic tube a cylinder U, in which travels a piston u, connected by a rod u' to the cross-head H. The opposite ends of the cylinder are provided with cocks y, which may be turned to regulate the escape of air from the cylinder as the piston travels therein. This cylinder acts as a double dash-pot, and as its piston u travels with the cross-head and piston G′ any quick action of the latter is prevented.

In operation, considering the parts to be in the position shown in Figs. 1 and 2, with the carrier traveling in the direction of the arrow, the upper carrier-wheel b will come into contact with and raise the arm s^2 of the lever S, effecting the movement of the rod s', the arm r', rock-shaft q, arm r, link s, arm m^3, and turning the valve I′ to the position shown in Fig. 3. The air or steam under pressure then enters the cylinder G and forces the piston G′ and the cross-head H toward the end of the tube, the doors being opened by the connecting-rods p, extending from the cross-head to the levers o.

When the doors are opened, the carrier emerges from the end of the tube and travels along the rails F F′ until the upper carrier-wheel b comes into contact with the arm t' of the closing trip-lever T, the upward movement of the arm t' being transmitted to the valve by the rod t^3, arm r^2, rock-shaft q, arm r, link s, and arm m^3, and the valve being moved to a position opposite to that shown in Fig. 3 to permit the entrance of air or steam to the cylinder G and effect the movement of the piston to close the doors D D′. Ordinarily the valve I′ rests midway between the ports to prevent the entrance of steam or air to either end of the cylinder.

It will be understood that the structure herein described may be modified without departing from my invention and that the mechanism may be employed in connection with any form of carrier or tube. If desired, a single door may be employed in place of the double doors shown, although the latter is preferred.

Having thus described my invention, what I claim, and desire to secure by Letters Patent, is—

1. The combination of the tube, A, pivoted doors, D, D′, having overlapping meeting edges, levers, o, connected to the door-pivots, a pressure-cylinder, G, having entrance and escape ports, a valve for governing the admission of steam or air to the cylinder, a guided cross-head, H, rods, p, connecting the cross-head to the levers, o, a piston-rod, g, extending between the cross-head and the piston, G, a trip-lever, S, having one arm, s^2, extending into the tube, and mechanism connecting said lever to the valve, substantially as specified.

2. The combination of the tube, doors for closing the same, a pressure-cylinder, a piston therein operatively connected to the doors, a cylinder or dash-pot, U, a piston, u, therein connected to and traveling with the piston of the pressure-cylinder, a valve for governing the admission of steam or air to the pressure-cylinder, a trip-lever extending into the tube and mechanism connecting said trip-lever to the valve, substantially as specified.

3. The combination of the tube, doors for closing the same, an opening trip-lever extending into the tube, guiding-tracks beyond the end of the tube, a closing trip-lever carried by one of said guiding-tracks, a pressure-cylinder, a piston therein operatively connected to the doors, a valve-casing, a rotative valve therein for governing the admission of

steam or air to the cylinder, a rock-shaft, q, arms, r, r', r^2, carried thereby, an arm, m^3, carried by the valve-spindle, a link, s, connecting the arms, r, and s^2, a rod, s', connecting the opening trip-lever to the arm, r', and a rod, f^3, connecting the closing trip-lever to the arm, r^2, substantially as specified.

In witness whereof I have hereunto set my hand this 8th day of January, 1897.

CHARLES B. ALLEN.

Witnesses:
WM. A. PIKE,
CHAS. F. PIKE.