Feb. 12, 1957 W. G. FLESSNER ET AL 2,781,442

APPARATUS FOR RIVETING

Filed March 9, 1953 2 Sheets-Sheet 1

Fig. 1

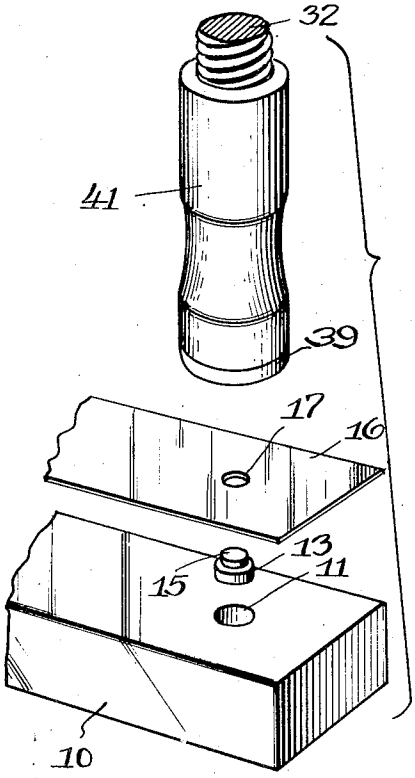

Fig. 2

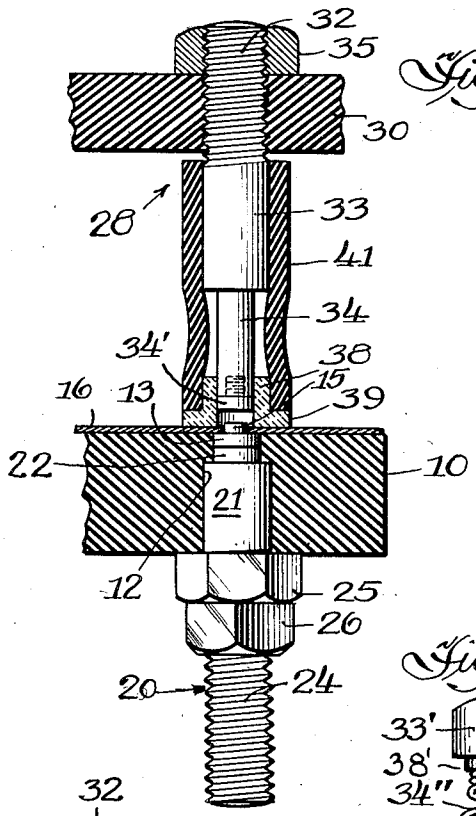

Fig. 6

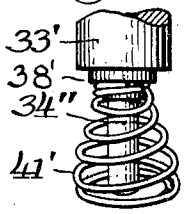

Fig. 4

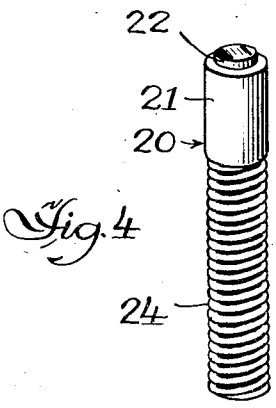

Fig. 3

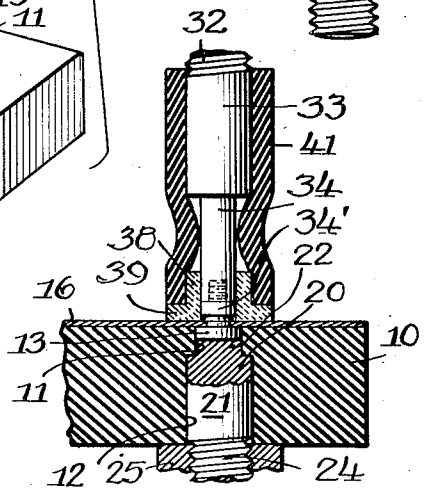

Fig. 5

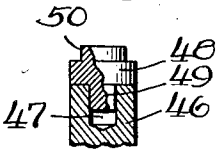

Inventors,
William G. Flessner
and Ernest W. Luke,
By: Schneider & Dressler,
Attys.

Feb. 12, 1957 W. G. FLESSNER ET AL 2,781,442

APPARATUS FOR RIVETING

Filed March 9, 1953 2 Sheets-Sheet 2

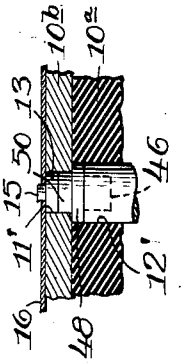

Fig. 7

Fig. 8

Inventors,
William G. Flessner
and
Ernest W. Luke
By: Schneider & Dressler,
Attys.

United States Patent Office 2,781,442 Patented Feb. 12, 1957

2,781,442

APPARATUS FOR RIVETING

William G. Flessner, Skokie, and Ernest W. Luke, Waukegan, Ill., assignors to Fansteel Metallurgical Corporation, a corporation of New York

Application March 9, 1953, Serial No. 341,074

5 Claims. (Cl. 219—150)

This invention relates to an apparatus for and method of welding small metal articles, and more particularly, relates to the welding of contact buttons or points upon metal arms, made particularly of spring material, by application of a forging action which intimately joins each contact button to its associated arm.

Contact buttons or points are available in a number of sizes and thicknesses and may be of any one of a number of different metals. The active contact material, which may consist of tungsten, silver or other relatively expensive material, usually comes with a backing of copper, iron, steel, or other relatively cheap metal. The backing generally is constructed in the form of a rivet having a shank of smaller diameter than the head of the button, which may be spread for the purpose of attaching the contact to the contact arm. The contact arm, which may be of thin metal, such as spring steel or spring copper or bronze, is generally apertured to accommodate the shank of the rivet-shaped contact backing part.

It is clear that a satisfactory contact and contact arm assembly should have perfect mechanical and electrical contact therebetween so that all mechanical movement will be concentrated or localized at the contact face, and also so that the circuit making and breaking function will be localized at the contact face. A contact assembly where the button or point is not tightly joined to the contact arm will be a fertile field for both mechanical and electrical difficulties. Mechanically, the repeated hammering to which contacts are subjected, as for example in the distributor points of an automobile engine, will tend to wear the backing of the contact button against the hard material of the contact arm. Electrically, any looseness between the contact button and arm will permit arcing to occur therebetween. Such arcing is, of course, destructive to the contact assembly. The improper functioning of the contact assembly in both mechanical and electrical senses will thus tend to reduce greatly the life expectancy of the contact assembly.

In certain present day methods and apparatuses for making contact assemblies, substantial difficulty is occasioned by the tendency of the spring arm to pull away from the contact button just at the instant when welding or riveting is to occur. This pulling is usually caused by the action of intense magnetic fields set up by heavy welding currents and the resiliency of the spring arm. At this instant, the shank metal is soft and has not been spread, so the contact button cannot be considered as riveted to the arm. In other present day methods and apparatuses for making spring contact assemblies, there is a tendency to crack or damage the contact button. This occurs when the button is gripped in a chuck and the shank is spun or staked. The center of the contact button is not supported against the spinning or staking force and the contact button frequently cracks.

In accordance with this invention, a method and apparatus is provided wherein the assembly of contact button and contact arm and the subsequent welding thereof is facilitated. The new method and apparatus are positive

in action and render the manufacture of contact assemblies fool-proof and effective, while making it practically impossible to produce defective or damaged assemblies or parts.

In general, the new apparatus provides a welder having top and bottom electrodes. For convenience, a vertical orientation of the welder will be assumed; it is possible, however, to have other welder positions. The bottom electrode is recessed to accommodate a contact button, the button being disposed with the contact face down and the rivet shank up. An apertured spring arm for the assembly is disposed over the bottom electrode so that the contact shank will project through the aperture in the spring arm. The top electrode of the new welder is provided with a resilient member extending therefrom and bearing upon the spring arm to prevent the spring arm from pulling away from the contact button shoulder formed at the point where the shank joins the head of the contact button.

Additionally, the top welding electrode has the active part thereof of refractory material. The welder itself is of the resistance type with the electrodes and work being tightly in contact during the welding. Such welders customarily have the active electrodes of relatively soft material such as copper. By contrast, the new welder has the active part of the top electrode, and in some instances both electrodes, of refractory material. As a result, a welder embodying the present invention makes it possible to develop a forging action upon the work during welding. In the case of a contact button having a rivet-like shank, the forging action is advantageous in that the metal is spread without the use of excessive force, such as would be necessary during hammering.

In its more general aspect, the invention may be considered as providing means in a resistance welder for spreading a rivet shank over a thin metal piece and preventing the thin metal piece from leaving the shoulder at the rivet head upon electrode separation. The current passing through the rivet shank serves to soften the shank metal to facilitate the forging action which intimately joins the spread rivet shank to the thin metal piece.

For a more complete understanding of the invention, both in its specific and general forms, reference will now be made to the drawings, wherein exemplary embodiments of the invention are illustrated. It is understood that variations within the skill of those versed in the art may be made without departing from the scope or spirit of the invention.

Referring therefore to the drawings:

Figure 1 shows an exploded view of the upper welding electrode and base block, with a contact button and spring arm between the electrode and base block in preparation for assembly.

Figure 2 shows, partly in section, the welding electrodes and the parts of a contact button assembly just prior to the initiation of welding.

Figure 3 is a view generally similar to Figure 2, but showing the electrodes pressed tightly together to weld the contact button and contact arm into a unitary assembly.

Figure 4 is a perspective elevation of a lower electrode.

Figure 5 is a detail, partly in section, of a modified form of lower electrode provided with a removable tip.

Figure 6 shows a modified form of resilient member to engage the contact arm.

Figure 7 shows partially in section a modified base block which may be used with the present invention.

Figure 8 is a diagrammatic view of a welding system embodying the present invention.

Referring first to Figures 1 to 5 inclusive, the significant portions of the welder comprise the electrode structures. Thus, the welder includes base block **10** of rigid insulating material, such as fibre, Bakelite, or wood. Block **10**

may be supported in any suitable fashion and has bore 11 with counterbore 12, the latter extending upwardly from the bottom of block 10 toward the top. Bore 11, together with the top face of the bottom electrode to be described later, cooperates to provide a shallow recess for accommodating contact button 13.

Contact button 13 has reduced shank portion 15, this contact button being assembled with contact arm or metal reed 16 to provide a contact assembly. Reed 16 is apertured at 17 to accommodate contact button shank 15, the length of the shank being somewhat greater than the thickness of reed 16. This is shown in Figure 2 where, prior to welding, the shank material extends through the reed aperture and has a part above the top surface of the reed. Where assemblies other than contact assemblies are to be joined, the contact button may be a simple rivet having a head and shank.

Insulating block 10 supports a bottom electrode generally indicated by numeral 20. The bottom electrode has body portion 21 and reduced electrode portion 22. The lateral dimensions of parts 21 and and 22 of bottom electrode 20 are so proportioned that the electrode snugly fits bore 11 of insulating block 10. Lower electrode 20 has portion 24 threaded so that nuts 25 and 26 may be used to adjust the electrode height in block 10 and for engaging the bottom surface of block 10 to withstand the welding pressure. Between nuts 25 and 26 a connector may be disposed for establishing a circuit connection to the lower electrode.

It will be understood that the bottom electrode may be removed from block 10 and replaced by another electrode having a different sized electrode portion 22 for the purpose of accommodating different thicknesses of contact buttons. The bottom electrode is preferably of silver or copper, having excellent heat and electrical conductivities, and has the active electrode part of silver or of refractory material, as will be explained later.

Block 10 is preferably stationary in the welding machine and is adapted to have a movable electrode assembly, generally indicated by numeral 28, bear down upon the parts for performing a welding operation. Movable electrode assembly 28 includes insulating block 30 carrying the electrode proper.

The top electrode comprises bolt portion 32, below which is body portion 33 carrying pin 34. Bolt portion 32 is threaded into a threaded part of block 30 and has nut 35 to lock the top electrode in desired vertical position. Block 30 may be made of a suitable conducting material, such as copper, to provide a convenient connecting surface for the end of a conductor (not shown) leading to a terminal of a source of current. Pin 34 may be integral with or attached to body portion 33 of the electrode structure, and the active tip face thereof is larger in area than the contact or rivet shank face.

The top electrode is preferably of silver or copper to provide excellent heat and electrical conductivities. Pin portion 34 may be of silver or copper with a removable tip 34′ made preferably of a refractory material, such as tungsten. Tip 34′ may be threaded into a bore provided in the end of pin 34. If desired, the removable tip may be omitted and the entire pin 34 may be made of the refractory material, although this is not preferred.

Slidable over pin 34 is insulating bushing 38 having bottom flange 39 extending outwardly therefrom. Bushing 38 is of insulating material such as Bakelite, glass, ceramic or other rigid insulating material. Disposed over body 33 of the top electrode is flexible sleeve 41 of rubber, plastic or similar resilient material. Sleeve 41 extends down far enough so that it encloses pin 34 and engages the outer surface of bushing 38. Sleeve 41 and body 33 are so proportioned that the sleeve hugs the body tightly. Bushing 38 is also large enough so that the flexible sleeve will tightly grip the bushing. Flexible sleeve 41 is normally long enough so that in the normal position of the sleeve, bushing 38 will telescope with the end of pin 34, the lower part of the bushing extending beyond the pin as illustrated in Figure 2.

Bushing 38 functions as an extension of sleeve 41. It is possible to omit the bushing and rely upon the sleeve alone, although the embodiment just described is preferred.

Upon downward movement of the top electrode, bushing 38 will be telescoped over pin 34, the active face 34′ of pin 34 pressing down against the top face of shank 15 of the contact button. It is understood, of course, that the means for supporting either block 10 or block 30, or both, will include suitable springs so that when the top electrode presses down upon the button shank there will be predetermined pressure exerted upon the end faces of the contact button or rivet, as the case may be.

By adjusting the pressure of the electrodes upon the contact assembly and the amount of electric current passing through the shank of the contact, a desired forging action will result. Inasmuch as the top electrode face is preferably made of refractory material, such as tungsten, and since shank 15 is usually of copper or other metal having a melting point which is low compared to tungsten, there will be little difficulty in securing a sufficiently high temperature for effecting a softening of the button or rivet shank metal without serious damage to the tungsten electrode face. The upper electrode initially makes contact with the button shank, which protrudes slightly above the reed 16, and only the button shank is heated to a sufficiently high temperature to be softened as the current is concentrated in the button shank.

The bottom electrode may be constructed similar to top electrode 28. Thus, referring to Figure 5, electrode 46 has recess 47 into which may be pressed electrode tip 48. When this construction is used for the lower electrode, tip 48 may have reduced portion 50 corresponding to reduced portion 22 of the electrode shown in Figure 3. Electrode tip 48 has depending part 49 extending into recess 47. A bayonet or screw joint, as shown for the top electrode, between the insert and electrode body may be provided to facilitate speedy change.

While silver may be used as an active electrode material at the electrode tip, it wears relatively fast, and no forging action is possible on copper. Tungsten, iron, nickel, or any metal having a melting point higher than copper or the shank metal, may be used as the active top electrode for obtaining forging as well as welding, this being attached to the silver or copper electrode body, as is tip 34′. In the specific example shown, only the shank end of the rivet is heated and forged. Hence, the top electrode will have a refractory metal tip, such as tungsten. However, there may be instances where the bottom of the rivet is to be heated and forged, in which case the bottom electrode will also include a tip made of a refractory material.

As shown, however, the bottom electrode need only conduct current to the contact button and the large area of the contact button will assure good conduction of the current to the shank.

During a welding or forging operation, flexible sleeve 41 will yield and permit flanged bushing 38 to slide upwardly. The spring of sleeve 41 will retain flanged bushing 38 against reed 16 and prevent any movement of the reed upwardly away from the contact button.

Instead of a flexible sleeve, a coil spring may be used. The spring is insulated either from the reed or from the movable electrode body, or both. Such a construction is shown in Figure 6 where helical spring 41′, having a tapered cross-section, embraces part 34″ of the electrode and is retained against upward movement by insulator 38′.

The movable electrode may also be tapered with the larger end up and thus permit the use of a simple coil spring rather than a tapered helical spring.

It is also possible for the resilient member projecting ahead of the movable electrode to be disposed on one side

of the electrode pin and not necessarily surround the electrode pin as the rubber sleeve and springs do. It is true that the force on reed **16** would be on one side only of the aperture; however, reed **16** is usually stiff enough so that if one part of the reed near the aperture is restrained from upward movement, the remainder of the reed will be restrained.

Instead of a contact point assembly, the contact button may be a rivet, and reed **16** may be replaced by two or more articles to be riveted together.

Suitable means for cooling the electrodes may be provided. Thus, water-jacketed electrodes are well known in the art and may be used.

To more readily adapt the welding apparatus of the present invention for use with contact buttons of varying size, the base block shown in Figures 1, 2 and 3 is modified in the manner shown in Figure 7. The block herein comprises a lower portion **10***a* made of an insulating material as in Figures 1, 2 and 3, and an upper portion **10***b* made of a suitable metal, such as a nickel-alloy material. Base block portions **10***a* and **10***b* have apertures **12'** and **11'** respectively, corresponding to apertures **12** and **11** in the embodiment of Figures 1, 2 and 3. Aperture **11'** snugly receives the head of a contact button **13**. The upper and lower portions **10***a* and **10***b* are held together by suitable fastening means, as by threaded bolts (not shown), so that the upper portion **10***b* may be readily changed in order to accommodate contact buttons of different sizes, requiring aperture **11'** to be of a different width or depth.

The lower electrode construction shown in Figure 5 is utilized in the embodiment of Figure 7 so that the tip **48** may be readily changed when necessary.

Referring now to Figure 8, there is shown a welding system for carrying out welding. The welding comprises base **50** upon which is supported the lower electrode structure previously described. Base **50** has post **51** and arm **52** carrying head **53**. Within head **53** is the movable top electrode previously described and for convenience generally indicated by numeral **54**. Top electrode **54** is carried by a suitable piston operating within an air cylinder of a conventional press. A winding, generally indicated by numeral **56**, controls the air applied to the piston. Excepting for the detailed construction of the two electrodes as previously described, the welder shown in Figure 6 and so far described is conventional.

The top and bottom electrodes are connected by wires to a power source generally indicated by **58**. The power source is adapted to supply heavy alternating or direct currents at a low voltage of the order of about 1 or 2 volts. Power source **58** has wires **59** and **60** for controlling the energization of the power source.

Movable electrode assembly **54** carries trip arm **62** which is adapted to cooperate with switch finger **63** of switch **64** secured to a suitable part of the welder, such as for example post **51**. Means not shown are provided for adjusting the closure of switch **64** at a predetermined point in the downward travel of the movable electrode assembly. The timing is such that switch **64** is closed just prior to the impact of electrode pin **34** upon contact shank **15**.

Switch **64** has one terminal connected by wire **66** to the top terminal of winding **67** of relay **68**. Relay **68** is of the type having a delayed opening and closing, such relays being well known and available in a variety of forms. The delay in the relay operation is of the order of between about one tenth and about one third of a second, although this may vary depending upon various factors.

Winding **67** has its lower terminal connected by wire **69** to fixed contact **71** of an operating relay **72**. Fixed contact **71** cooperates with movable contact **73**, this latter contact also cooperating with fixed contact **74**. It is understood that movable contact **73** bridges fixed contacts **71** and **74**, when the relay is closed, to connect these fixed contacts. Contact **74** is connected by wire **75** to junction **76**. Junction **76** is connected to one terminal of winding **77** of relay **72**, the other terminal of this winding being connected by wire **78** to the remaining terminal of switch **64**.

Wires **59** and **60** are connected to fixed contacts **80** and **81** respectively of relay **72**. Movable contact **82** is provided for bridging contacts **80** and **81**. Both the movable contacts are mounted on a suitable plunger **84** which is actuated by winding **77**. The relay is normally biased to the open position as shown, from which position energization of winding **77** will close the relay contacts.

Winding **56** for operating the press part of the welder has center **87** grounded. Winding **56** has terminals **88** and **89**, the winding consisting of two parts, one winding for driving the movable electrode in one direction and the other winding for driving the movable electrode in the other direction. Terminal **88** of the air control winding is connected by wire **91** through manual switch **92** to fixed contact **93** of delay relay **68**. Terminal **89** of the air control winding is connected by wire **94** to fixed contact **95** of delay relay **68**. Delay relay **68** has movable contact **96** normally biased against contact **93**. Upon energization of the relay winding **67**, movable contact **96** will be pulled against off normal contact **95**.

Movable contact **96** of delay relay **68** is connected by wire **97** to transformer secondary **98**, the other terminal of the secondary being grounded. Secondary **98** is part of transformer **99** having primary **100** connected across supply wires **101** and **102**. Wires **101** and **102** are connected to junction **76** and to wire **66** respectively. A double pole single throw switch **103** is provided for cutting off power to wires **101** and **102** in case the system is to be shut down.

The operation of the system shown in Figure 7 is as follows: It is assumed that a contact button is seated in block **10** and that reed **16** is disposed over shank **15**. Suitable automatic means for feeding contact buttons and reeds to the welder may be provided. In the normal position of the welder, the top electrode will be clear of reed **16** so that both the contact button and reed may be properly positioned in the lower electrode structure.

Upon closure of manual switch **92**, the left-hand half of winding **56** will be energized. This will cause the welding electrode to be moved downwardly. When switch **64** has been tripped to a closed position, an energizing circuit for winding **77** will be established. This circuit will run from wire **102**, along wire **66**, through switch **64**, wire **78**, winding **77** to wire **101**. Relay **72** will close. The closure of relay **72** will cause contacts **71** and **74** to complete an energizing circuit for winding **67** of the delay relay. At the same time contacts **80** and **81** will be closed to trigger the power source. The electrodes at this time are pressing the contact assembly together and a heavy current will pass through the contact shank.

When heat cycle, as initiated by circuits **59** and **60**, has been completed, relay **67** operates to move contact **96** against contact **95**. When contact **96** breaks from contact **93**, the energizing circuit from secondary **98** to the left half of winding **56** will be opened. When contact **96** engages contact **95**, the right half of winding **56** will be energized and this will result in air being utilized to raise the movable electrode assembly. When the movable electrode assembly moves up enough to open switch **64**, relay **72** will release and open the circuit for winding **67** of the delay relay. The delay in release of relay **68** will suffice to permit the top electrode assembly to reach the end of its travel.

It is understood that manual switch **92** is closed long enough for the movable electrode assembly to reach the bottom of its stroke. By virtue of this switch arrangement, complete control over the welder is retained by the operator from the beginning of the downward stroke

until the electrode reaches the bottom. It is, of course, possible to provide trip means for starting a welding cycle by a momentary closing of switch 92 after which the switch remains closed for the downward movement of the electrode.

After the top electrode has moved to trip switch 64, the welder is no longer under the control of the operator. Instead, the time delay relay insures that a number of cycles of current (if alternating current is used) passes through the work. The welder of the instant invention thus provides a relatively simple and effective means combining resistance welding and forging action in a manner which greatly reduces the human element, thus assuring uniformity of work.

The term "refractory material," used throughout the specification and claims to describe the material out of which the electrode tips are made, should be understood to mean a conductive material which has a melting point appreciably higher than the material being welded.

The system for welding contact buttons above disclosed primarily utilized a forging action to weld or intimately join a contact button to its associated arm. The shank of the button was heated by current merely to soften the shank to facilitate the forging action. If desired, the current passing through the contact button or other work piece may be utilized to actually melt the contact button, or other work piece, and the associated material to provide for a fusion welding action, as well as a forging action.

Numerous other variations of the specific welding system above described may be used without deviating from the broader aspects of the present invention.

We claim:

1. In a welder for spreading a rivet over thin metal stock, the combination of an electrode having an active face for contacting and supporting the head of a rivet, at least one apertured metal strip through which the rivet shank passes and over which the shank is to be spread, means for supporting said metal strip in proper relation to the rivet so that the rivet shank extends through the aperture, and a movable electrode assembly including an elongated movable electrode having an active tip portion carried by a larger body portion, said movable electrode having its tip normally spaced from the shank face but movable toward the same to contact the shank face and exert pressure thereon, a resilient sleeve-like member carried by said larger body portion and also surrounding the tip portion, a substantial part of the sleeve surrounding said tip portion being free of any lateral support so that said unsupported portion may yield substantially in all directions, said member having its unsupported portion extending from said movable electrode assembly toward the thin metal strip, said resilient member being self-seating on said metal strip and bearing against the same prior to any contacting of the movable electrode upon the shank face, said resilient member having lateral clearance from said tip portion and yielding upon movement of said electrode to engage the shank face, said electrodes contacting the rivet at opposite ends of the rivet and passing a heavy current through the rivet to heat the same, said resilient member serving to maintain the thin metal strip in self-seating position with respect to the rivet shoulder.

2. The welder according to claim 1 wherein said resilient member is a rubber sleeve.

3. The welder according to claim 1 wherein said resilient member is a flexible rubber sleeve and has a bushing carried at the end thereof, said bushing fitting the electrode and being slidable along said electrode.

4. The welder according to claim 1 wherein said resilient member is a helical coil spring.

5. The welder according to claim 1 wherein said resilient member is a tapered helical coil spring with the small end of the spring being disposed around the larger body portion and the large end of the spring extending in a manner to engage the thin metal strip.

References Cited in the file of this patent

UNITED STATES PATENTS

170,590	Pratt	Nov. 30, 1875
1,261,327	Henke	Apr. 2, 1918
1,322,848	Henke	Nov. 25, 1919
1,439,209	Watson	Dec. 19, 1922
1,451,894	Rypinski	Apr. 17, 1923
2,300,477	Whitcomb	Nov. 3, 1942
2,405,033	Grimes	July 30, 1946

FOREIGN PATENTS

335,876	Great Britain	Oct. 2, 1930