Jan. 21, 1947. W. THOMAS 2,414,777

UTILITY BEVEL STRUCTURE

Filed May 27, 1943 3 Sheets-Sheet 1

Fig. 1.

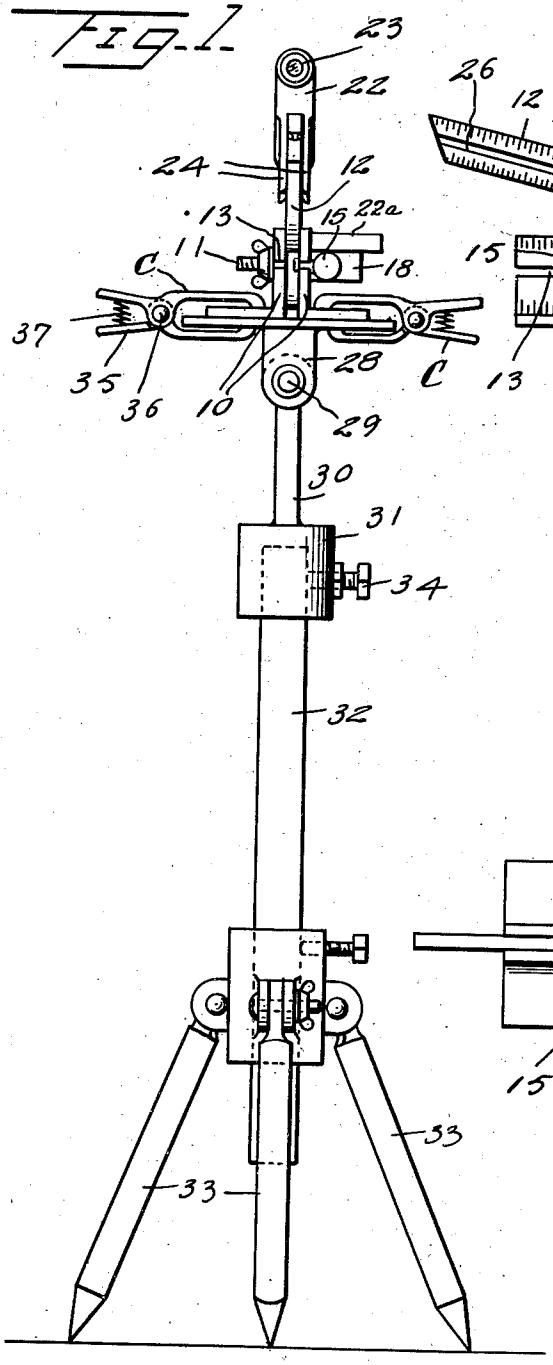

Fig. 2.

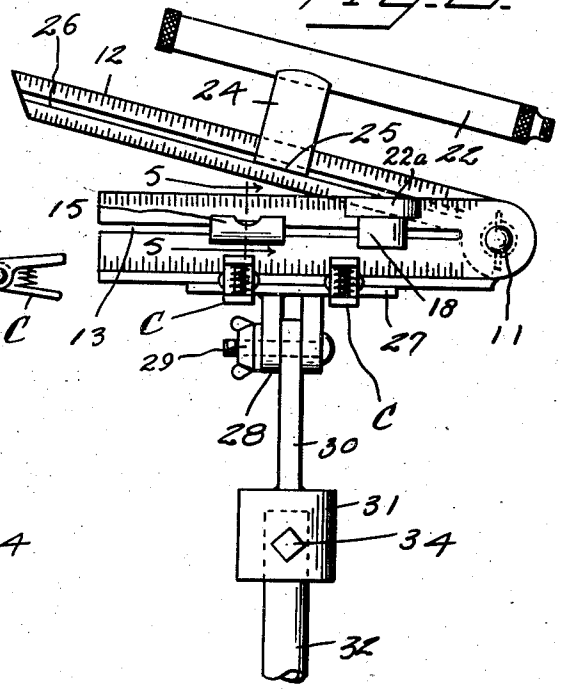

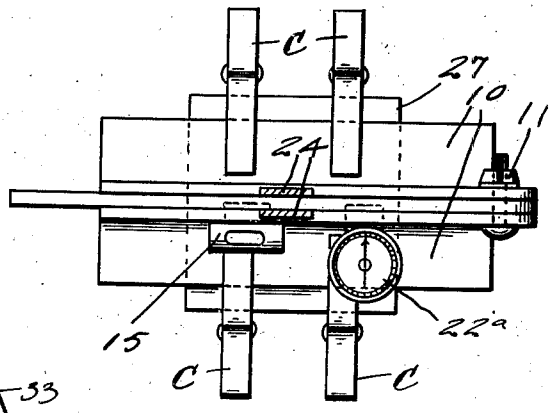

Fig. 3.

Inventor

Wm. Thomas

By L. F. Randolph

Attorney

Jan. 21, 1947. W. THOMAS 2,414,777

UTILITY BEVEL STRUCTURE

Filed May 27, 1943 3 Sheets-Sheet 2

Fig. 7.

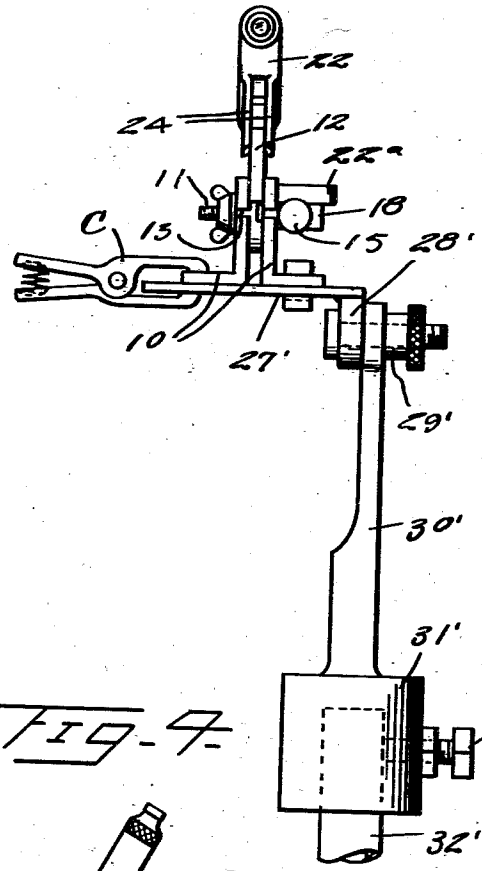

Fig. 8.

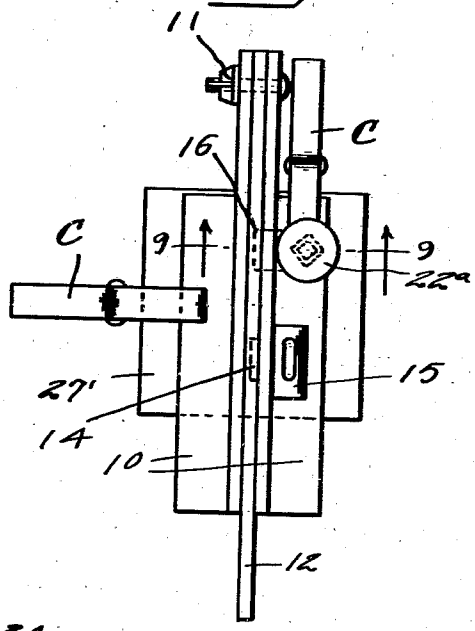

Fig. 4.

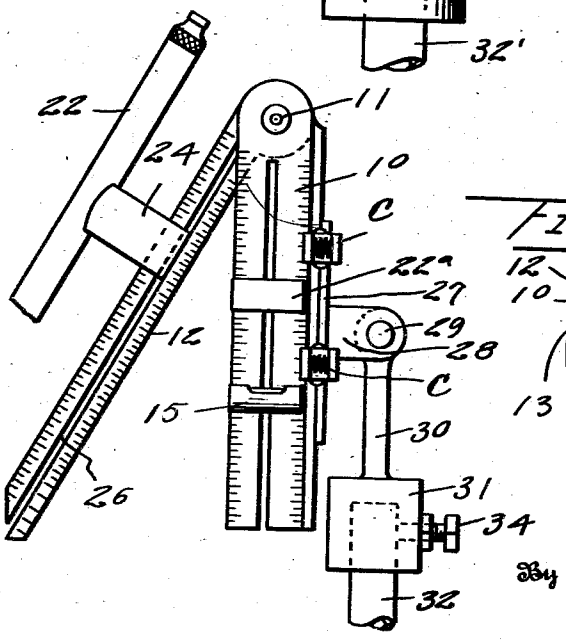

Fig. 9.

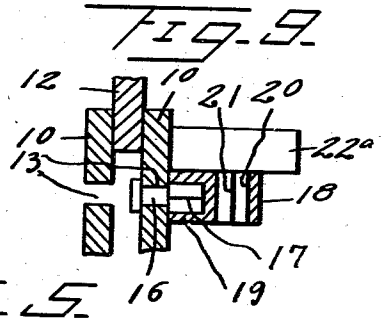

Fig. 5.

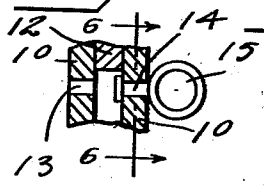

Fig. 6.

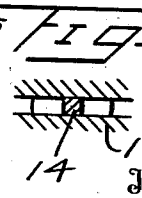

Inventor

Wm. Thomas

By L. F. Randolph

Attorney

Jan. 21, 1947. W. THOMAS 2,414,777

UTILITY BEVEL STRUCTURE

Filed May 27, 1943 3 Sheets-Sheet 3

Fig. 10.

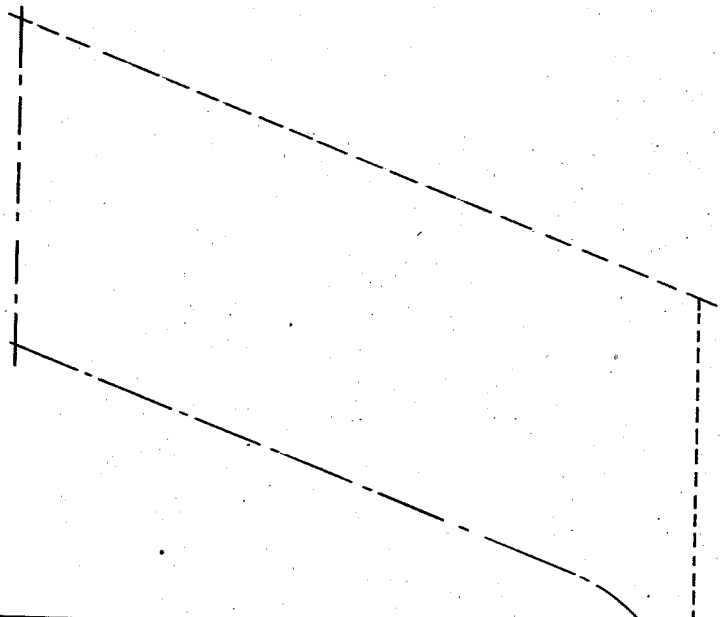

Fig. 11.

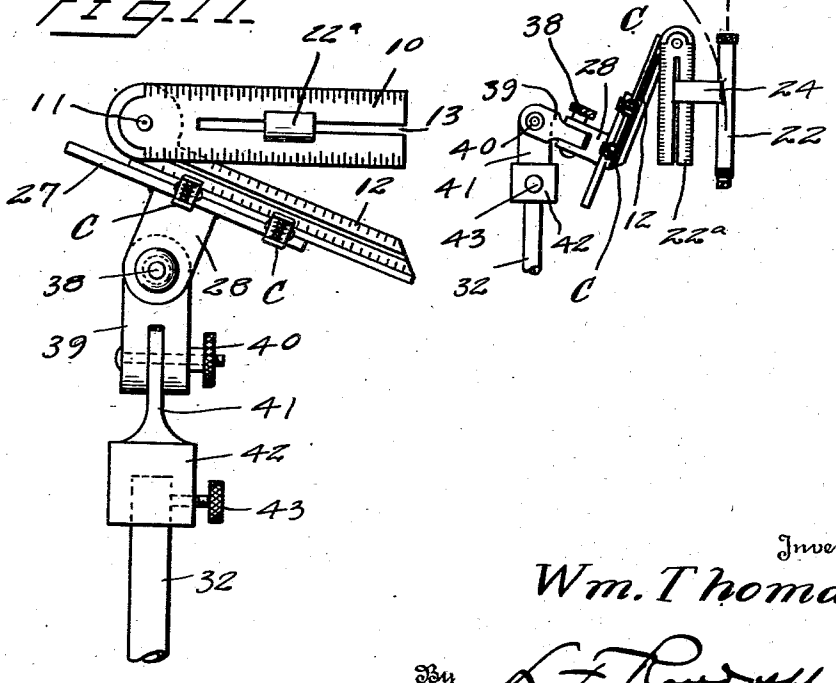

Inventor

Wm. Thomas

By L. F. Randolph

Attorney

Patented Jan. 21, 1947

2,414,777

UNITED STATES PATENT OFFICE

2,414,777

UTILITY BEVEL STRUCTURE

William Thomas, San Francisco, Calif.

Application May 27, 1943, Serial No. 488,730

2 Claims. (Cl. 33—102)

1

This invention relates to a utility bevel structure and it aims to provide a novel bevel and mounting therefor.

It is particularly aimed to provide a plate adapted to be suitably supported, in combination with a bevel and readily operable clamp means to secure the bevel at desired locations on the table.

Further, it is aimed to provide a structure with which a peep-sight telescope may coact and in which the plate may be effectively mounted on a tripod, and a structure in connection with which a compass and a bevel may be operatively associated and interchangeably positioned.

The present bevel structure is primarily adapted for use as a substitute for a regular level on preliminary or other layout work especially since it is light in weight and can be carried in a small handbag or case. It defines altitudes, inclinations, declinations and also horizontal positions and is useful for constructions, buildings, preliminary surveying, mine surveys, prospectors' claims and the like, and when stripped of all accessories, is still a level which may be used for shop or office work. The structure may be used from the top of a hill or building and also from the side of a hill or building, or straight down as against altitudes and the horizontal only. The bevel is extremely useful when it is impossible to lay out horizontally due to obstructions or other reasons.

The more specific objects and advantages will become apparent from a consideration of the description following taken in connection with accompanying drawings illustrating an operative embodiment.

In said drawings:

Figure 1 is a view in elevation of the utility bevel and associated parts supported on a tripod;

Figure 2 is an elevation of the upper part of Figure 1 taken at a right angle thereto;

Figure 3 is a view primarily in top plan;

Figure 4 is an elevation of the bevel in position for use in connection with a declivity;

Figure 5 is a detail section taken on the line 5—5 of Figure 2;

Figure 6 is a detail section taken on the line 6—6 of Figure 5;

Figure 7 is an elevation showing the bevel in connection with a modified form of table;

Figure 8 is a plan view of the parts of Figure 7, with the telescope removed;

Figure 9 is a vertical section taken on the line 9—9 of Figure 8;

Figure 10 is a view in elevation of a modified

2

form, showing its use in finding double angles; and

Figure 11 is an elevation of the structure of Figure 10 showing the parts in a different position and taken at a right angle thereto.

Referring specifically to the drawings, and first to the form of Figures 1 to 6, I employ a bevel consisting of a pair of main blades 10, in spaced-apart relation, and which are angular in cross section, as best shown in Figure 1. Such blades have at one end a connecting bolt 11 of conventional form, on which an auxiliary blade 12, preferably flat, is pivotally mounted, and by means of which it is adapted to be clamped, between the blades 10 in parallelism therewith, or at any desired angle with respect thereto. These blades 10 and 12 may be calibrated suitably, if desired, or calibrations may be omitted.

Either or both of the blades 10 may have a longitudinal slot 13 extending inwardly from one end thereof and removably accommodating a T-head 14 carrying a conventional spirit level 15.

Said slots 13 also removably and slidably uphold a T-head 16 of a stud 17, as best seen in Figure 9, which is square or otherwise non-circular in cross-section and on which at different angles a disc-shaped fitting 18 is removably applicable at various angles by means of a socket 19. In turn the fitting 18 has a socket or opening at 20 which removably receives in different positions a lug 21 depending from a compass 22a of conventional construction. The stud or lug 21 is preferably square or otherwise non-circular in cross-section and the opening 20 is shaped to correspond. The construction described and the mounting with respect to the level 15 and compass 22a enable positioning thereof at various adjustments; for instance, with their upper faces parallel with the upper edge of the main blades 10, or with such faces at a right angle thereto as contrasted in Figures 2 and 4.

Associated with the auxiliary blade 12 is a conventional peep-sight telescope 22 preferably having crossed wires as a reticule at 23, at the sighting end. This telescope is disposed in parallelism on the auxiliary blade 12 and optionally used with or removed therefrom. The telescope 22 is attached to the auxiliary blade 12 in adjusted position by the engagement of clasped arms 24, arranged to spring slightly toward each other and having inward projections 25 disposable and slidable in grooves 26, arranged longitudinally of the auxiliary blade 12 and open at one end thereof.

In order operatively to mount the bevel described and its associated parts I provide a novel

plate or table as at 27, the same having depending spaced lugs 28 connected by a conventional bolt and wing nut fastening at 29. Disposed between the lugs 28 is a bar 30 of a socket 31, open at its lower end. The fastening 29 passes through the bar 30 and is operable to clamp the bar 30 between the lugs 28 and the plate at any desired angle. Socket 31 is adapted to receive the central standard 32 of a conventional tripod generally suggested at 33, a screw 34 being used detachably but rigidly to secure the socket 31 on the standard 32.

The bevel and associated parts are adapted to be clamped detachably to the table or plate 27, in the most advantageous position according to the work in hand and preferably by detachable clamps or clasps generally designated C. These clasps consist of two levers 35 for example, pivoted together at 36, engageable with the upper surfaces of the lower flanges of the blades 10 and undersurfaces of the plate or table 27, under urgency of expansive springs 37 disposed between the handle or grip portions of the clamps or clasps.

The bevel may be used for various purposes and in various relations. For instance, as shown in Figure 2 it is used for altitude work. Also, as in Figure 4 the parts are adjusted to the position for declivity work.

In Figures 7 and 8 I show a modified form of the supporting table or plate 27, the same in this instance being designated 27'. In lieu of two lugs 28 I employ a single lug at 28', preferably disposing it excentrically. A conventional fastening 29' is used adjustably to fasten the table or plate 27' to the upper end of an upright 30' having a socket 31' corresponding to that at 30 whereby, by means of a screw 34', it may be fastened detachably to a standard 32' of a tripod, which standard and tripod may be exactly as shown in the preceding form. It will be understood that the bevel and all associated parts attached to or supported on the plate or table 27' correspond to those described in connection with the preceding figures and have the same reference characters applied thereto.

A further modified form is shown in Figure 11 where the parts are positioned for use as an inclinometer. As such an instrument, the telescope 22 is not used. I use the plate 27 as in the first form but mount the same for adjustment or movement from a plurality of axes with respect to the tripod standard which may be that at 32 in the first form. The lugs 28 may be fastened adjustably by a conventional bolt 38 to an intermediate block or link 39, which in turn

is pivotally and adjustably clamped by means of a conventional bolt 40, to an upright 41 on a socket 42, fastened by means of a screw 43 to the standard 32. The parts thus are adjustable from the axes of the bolts 33 and 40, which are disposed at right angles to each other, both serving as pivots and as clamps.

As shown in Figure 10, I use the modified structure of Figure 11 in connection with the peep-sight telescope 22, in a manner which enables me easily to find double angles. One example of such use would be in measuring the angle or azimuth of two or more objects relatively to a base point by use of the compass 22*a*, and by use of the level 15 with the bevel and telescope to measure the angle of incline or declivity between the base point and objects.

The various parts in all forms of the invention may be made of a material which is completely non-magnetic or otherwise, as preferred; for instance, made of any suitable plastic, wood, non-magnetic material, steel, or other metal.

Also, I may use in connection with the structure any suitable plumb bob, containing the same when not in use, for example, in the standard 32 which is hollow for such purpose. The plumb bob may be suspended in an opening in the plate 27 or 27', if desired, or, when the bolt 11 is vertically disposed, may be suspended in an axial opening in such bolt or otherwise from any of the parts used, according to the work in hand.

Various changes may be resorted to provided that they fall within the spirit and scope of the invention.

I claim as my invention:

1. A device of the class described comprising a bevel for use as a substitute for a regular level, the bevel having a longitudinally extending groove in one blade thereof, a non-circular stud having a T-head positioned and adjustable along said slot, a fitting having a socket engageable with said stud, said fitting also having an opening adapted to receive a supporting lug of a compass or the like.

2. A structure of the class described comprising a bevel for use as a substitute for a regular level, the bevel having opposed blades of angular form in cross section providing base flanges, a blade pivotally secured between said first mentioned blades, an approximately horizontal plate on which the first mentioned blades are disposed, and removable clamp elements gripping the base flanges of the first mentioned blades and the plate.

WILLIAM THOMAS.