US 20100101293A1

(19) United States

(12) Patent Application Publication

Hoen

(10) Pub. No.: US 2010/0101293 A1

(43) Pub. Date: Apr. 29, 2010

(54) COILING FURNACE

(76) Inventor: Karl Hoen, Asbach (DE)

Correspondence Address:
K.F. ROSS P.C.
5683 RIVERDALE AVENUE, SUITE 203 BOX 900
BRONX, NY 10471-0900 (US)

(21) Appl. No.: 12/376,796

(22) PCT Filed: Jul. 20, 2007

(86) PCT No.: PCT/EP07/06469

§ 371 (c)(1),
(2), (4) Date: Feb. 9, 2009

(30) Foreign Application Priority Data

Aug. 12, 2006 (DE) 10 2006 037 962.4

Publication Classification

(51) Int. Cl.

C21D 9/68	(2006.01)
B21B 1/34	(2006.01)
C21D 9/54	(2006.01)
B21C 47/04	(2006.01)

(52) U.S. Cl. 72/202; 72/229; 72/231; 432/59

(57) ABSTRACT

The invention relates to a coiling furnace (**1**), especially a coiling furnace (**1**) for Steckel rolling mills, wherein a hot-rolled strip (**2**) is coiled and uncoiled and optionally heated on a furnace drum (**3**) in the furnace interior (**4**) in a reversing manner. Said coiling furnace comprises guide tables (**6**) mounted on the mobile furnace door (**5**) of the coiling furnace (**1**) for inserting and/or guiding the heat-rolled strip (**2**), the furnace door (**5**) and the coiling furnace (**1**) being separate units. The furnace door (**5**) is arranged on a part of a roller rack (**6**) below the coiling furnace (**1**) and the furnace door (**5**) is subdivided into at least two elements (**8**, **9**) that swing in relation to one another, both door elements (**8**, **9**) being interconnected via a door bearing (**10**) and being configured to be pivoted. The invention is characterized in that the coiling furnace (**1**), in its interior (**4**), is configured with only one furnace roller (**11**) to allow complete insertion of the strip into the coiling furnace without the risk of the strip coming undone. For withdrawal of the strip a cover plate is placed on the door element and there is no need for a stripper.

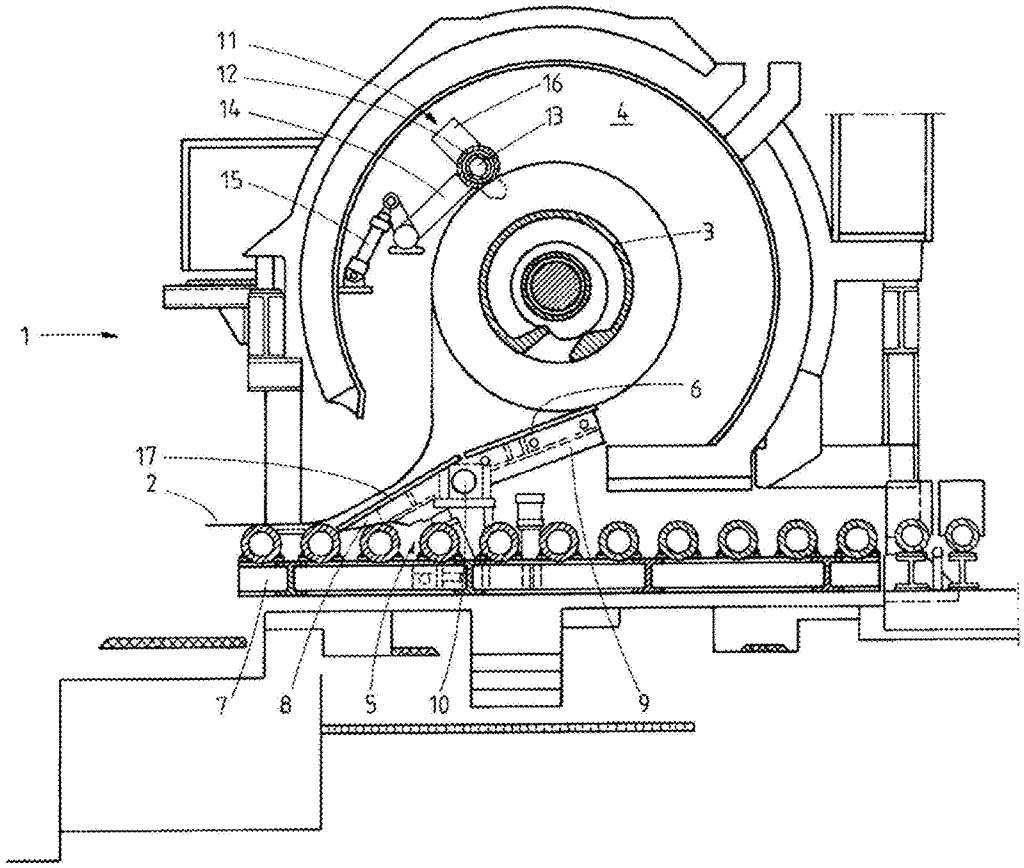

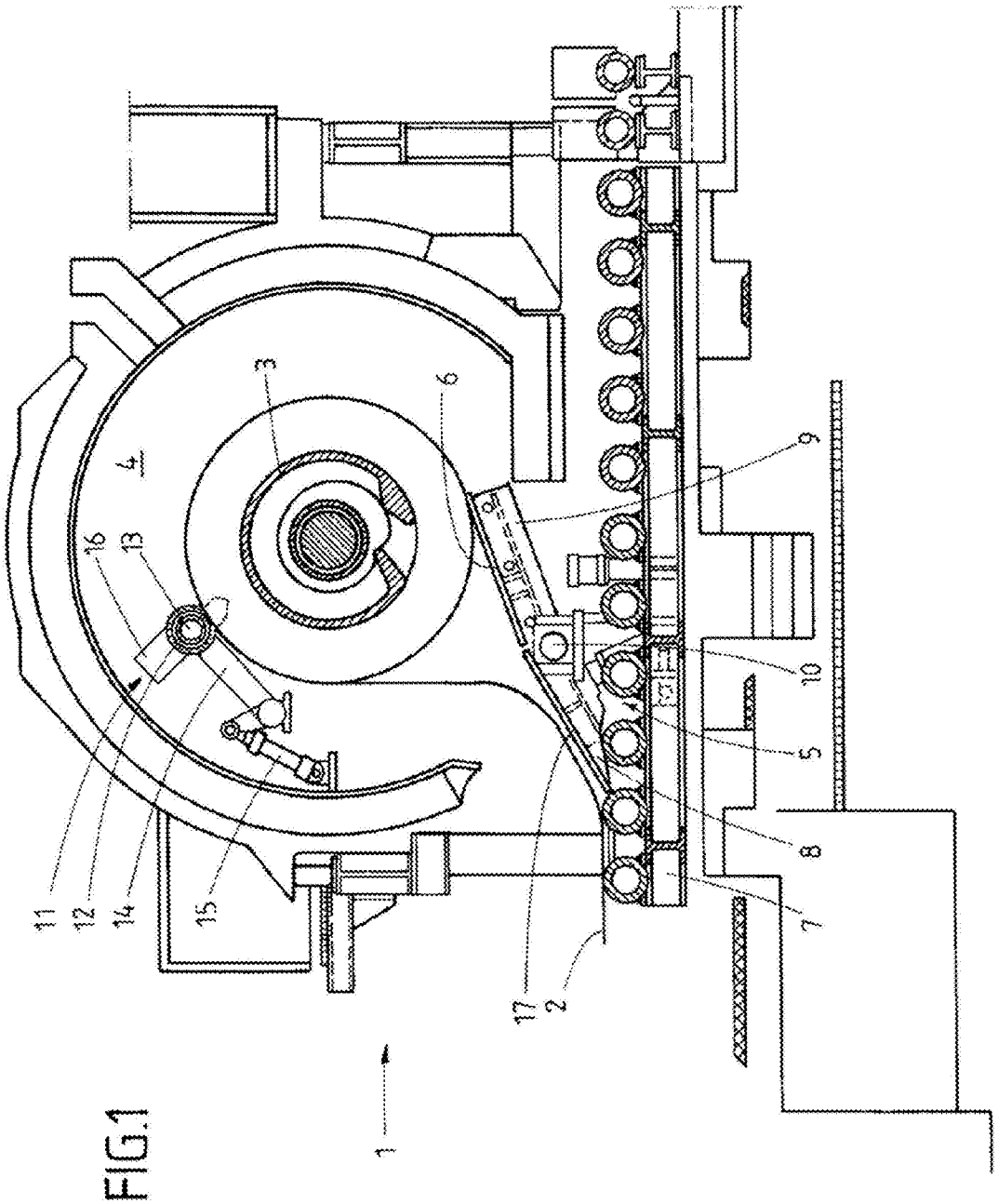

FIG.1

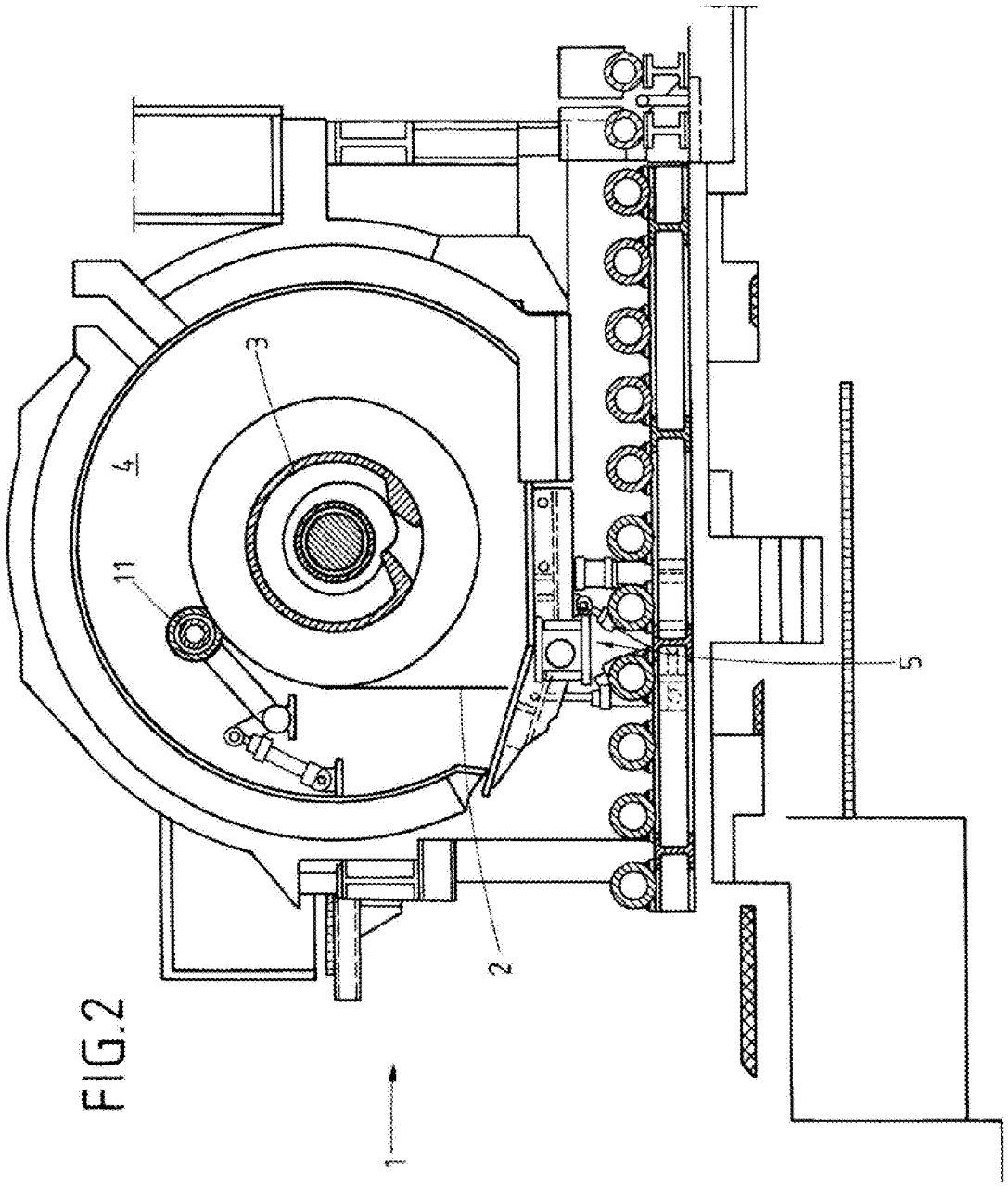

FIG.2

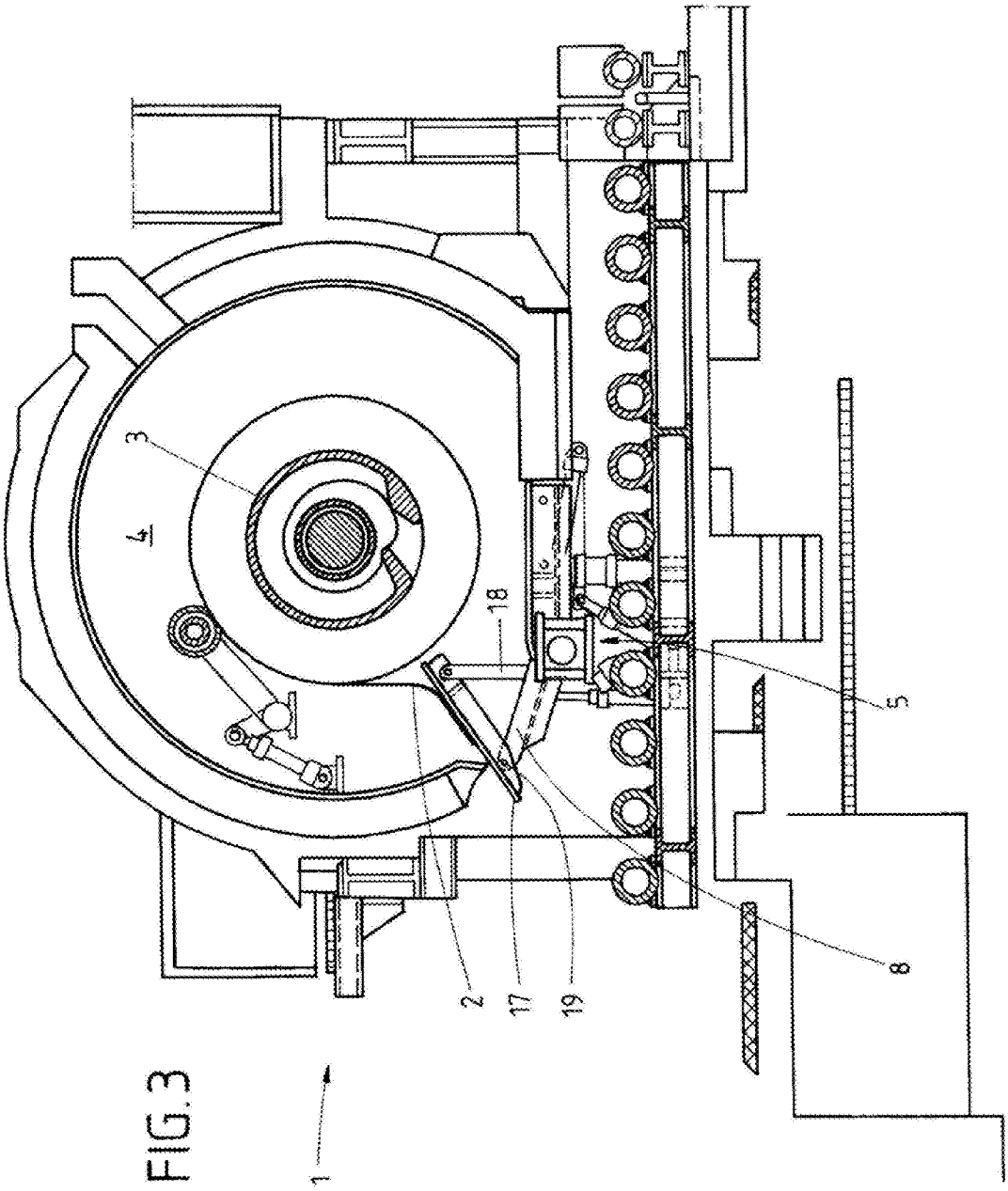

FIG.3

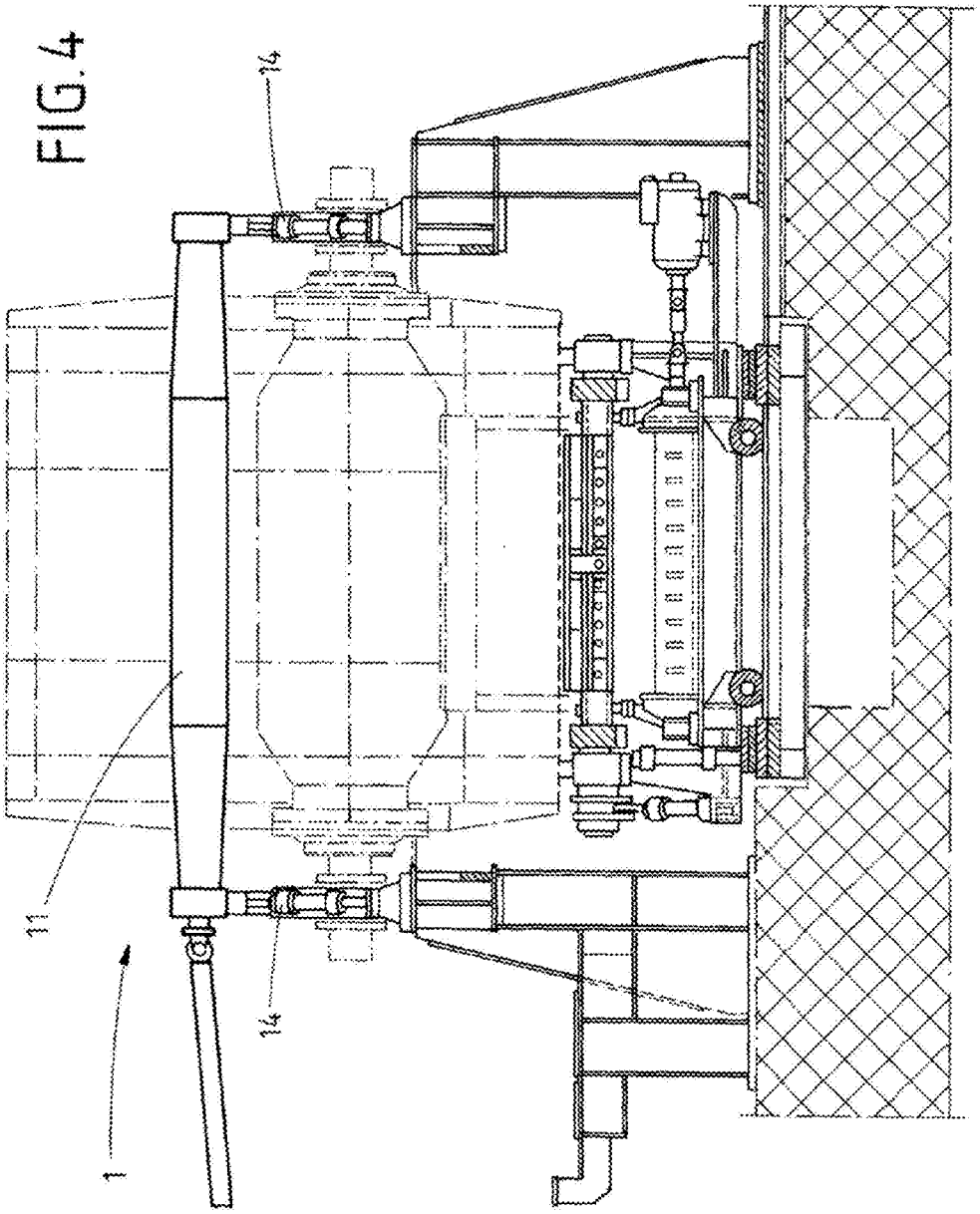

FIG. 4

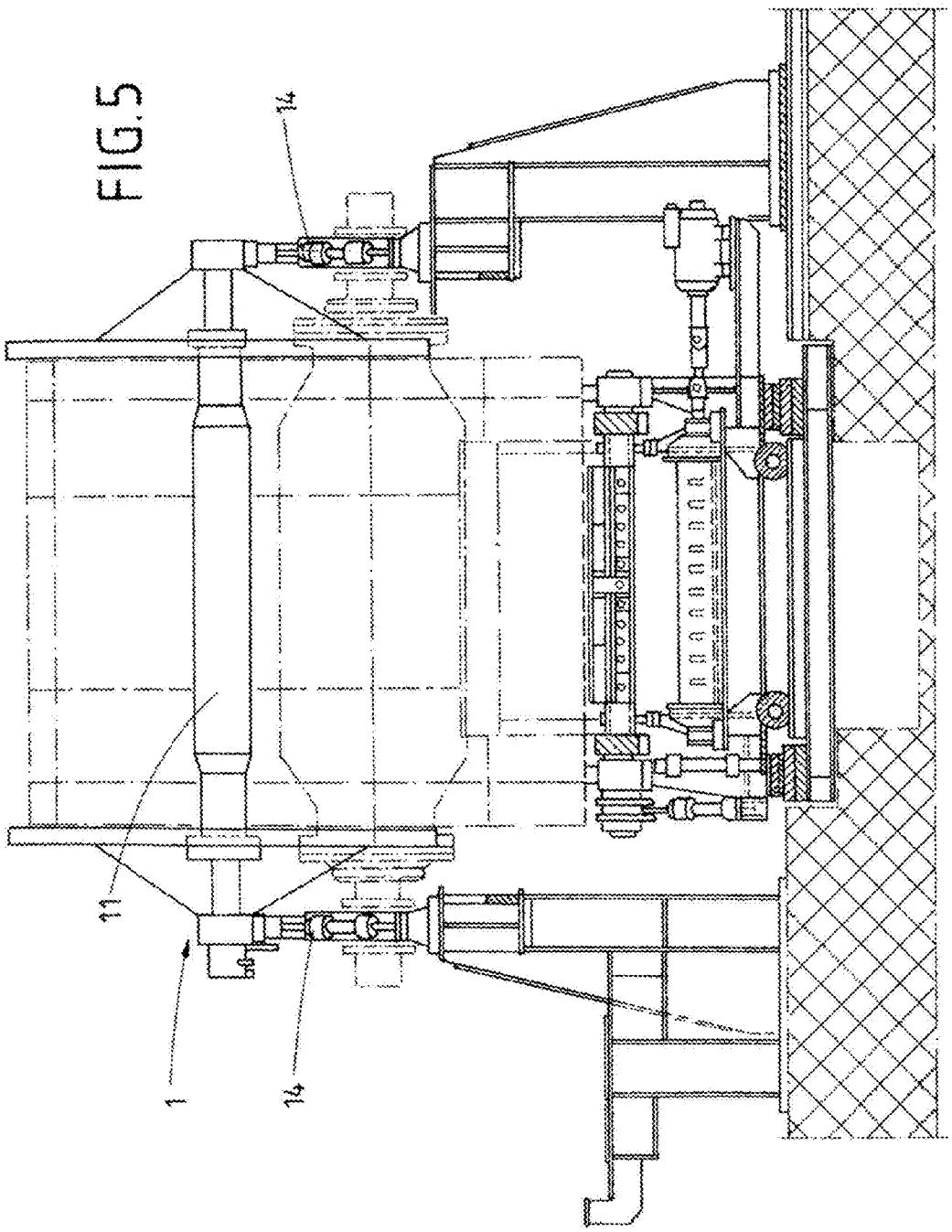

FIG.5

COILING FURNACE

[0001] The invention relates to a coiler furnace, in particular a coiler furnace for a Steckel rolling mill in which a hot-rolled strip is wound and unwound and optionally heated on a drum inside a furnace and oscillated back and forth, comprising guide plates for threading and/or guiding the rolled strip, the guide plates being mounted on a moveable furnace door of the coiler furnace, the furnace door and the coiler furnace being separate units with the furnace door mounted on a part of a roller rack located below the coiler furnace and the furnace door divided into at least two part that are hinged with respect to one another with both parts connected via a hinge and made pivotal.

[0002] From DE 743 011 a Steckel coiler furnace is known with a pivoted tilting table, descaling roll and stripper, the tilting table being provided with a pressure roller that presses against the descaling roll when the tilting table is pivoted up and forms with the descaling roll a strip puller that during unwinding pulls the strip-shaped rolling stock from the coil, the stripper being supported in a displaceable manner.

[0003] DE 685 904 [U.S. Pat. No. 2,072,122] describes a reversing mill for rolling out billets into strips and bands with coiler furnaces arranged on both sides of the rolling mill and drive rollers adjustable in height as well as adjustable guides arranged on both sides of the rolling mill for the rolling stock, with which mill the rolling stock is rolled to and fro up to a certain thickness and, as soon as it has become coilable, is wound and unwound in the boiler furnace. Here the starting and reversing switches for the drive motor of the working rolls as well as a control device for positioning the drive rollers at the inlet side and outlet side as well as a shifting of the guides control direction change of the working rolls.

[0004] With these known devices, the goal was to avoid the coil coming undone by the use of so-called guide beams that were arranged in a circle around the coil. Since the guide beams were attached at one position in a fixed manner, their effectiveness was given only with a certain coil weight. They thus limited the maximum and at the same time the minimum coil weight, which worked against a flexible production with the system. Furthermore, they formed a stripper in order to detach the strip end from the coil and to guide it out of the coiler furnace. Since this complex stripper had to be attached between the furnace and the roller frame, it markedly restricted the view of the belt.

[0005] U.S. Pat. No. 5,637,249 describes how the metal strip can be wound up completely in the coiler furnace with the aid of a heated drive device in the furnace opening. The driver should be heated by a separate heat source. This solution has proven to be technically very complex and can only minimize length of the band cooled in an unacceptable manner. In order to be able to reliably ensure that the strip can be conveyed out of the coiler furnace again, the strip must stay in engagement with the drive device. However, this means that under operating conditions the strip end is never conveyed into the coiler furnace.

[0006] EP 0 619 377 [U.S. Pat. No. 5,479,807] proposes a driver in combination with a three-roller bending device and a stripper. In order to combine the driver and the three-roller bending device, two rollers are installed in the wall of the coiler furnace such that they are located partially inside and partially outside the furnace. The furnace drum is used as a third roller around which the bending is carried out. Since the coil on the furnace drum grows in diameter with each turn, the furnace drum is supported such that it can be displaced by hydraulic cylinders in a guide. The strip end is held in the drive/bending device in the furnace, namely between one of the rollers mounted in the wall of the coiler furnace and the coil. The stripper is intended to ensure that, even if the strip end adheres to the coil, it can be detached and the strip end safely conveyed out of the furnace.

[0007] One disadvantage of this device is that, even though it is stored in the coiler furnace, the strip is in contact with rollers mounted in the wall of the coiler furnace, which rollers are much colder than the strip itself. As a result, the strip end cools excessively and the cooled strip end is only minimized with even more complex devices, as in the above-referenced documents.

[0008] Moreover, the installation of the rollers in the furnace wall impairs insulation of the coiler furnace and energy consumption is increased.

[0009] Further coiler furnaces are described in DE 699 19 423 [U.S. Pat. No. 6,089,067], DE 40 16 256 [U.S. Pat. No. 5,009,092] and U.S. Pat. No. 5,269,166.

[0010] However, there are also cases in which it would be desirable to pull the entire strip completely into the coiler furnace. This is the case when the operation has to be interrupted during the rolling of a metal strip due to a breakdown. Another situation occurs when with certain types of metal a rolling pause is necessary in order to adjust the desired metallurgical properties. In such cases, by winding up the entire strip an unacceptable cooling of the strip end is avoided and the output of the system is increased.

[0011] With the coiler furnaces customary today this is not possible. If the complete metal strip were drawn into the known coiler furnaces, the coil formed on the furnace drum would come undone due to the elasticity of the metal strip. It would thus no longer be possible to convey the strip end out of the coiler furnace by reversing direction of rotation. The strip end would then have to be drawn out of the coiler furnace manually with special tools and protective clothing.

[0012] DE 32 24 621 [U.S. Pat. No. 4,442,690] describes a coiler furnace with a horizontal coil whose mandrel is arranged inside a shield with a strip guide surrounding the coiler mandrel and having pinch rollers for a strip to be wound and unwound, the strip guide comprising two cylindrical guide shells that can be pressed against the coiler mandrel from opposite sides, with the front guide segment in the winding direction adjoining a belt conveyor bridge for the supply and removal of the strip supported in a pivoted manner below the coiler mandrel. The coiler furnace is characterized in that the two guide segments are attached to loop arms arranged outside the heat protection cover, extending across the pinch direction of the guide segments, and having pivot axes parallel to the coiler mandrel so that the guide segment downstream in the winding direction forms the strip scraper with its unwinding edge and the belt conveyor bridge equipped with a separate semirotary actuator preferably comprises a roller bed whose end roller facing toward the coiler mandrel serves as a pinch roller for the strip. On page 3 of this document it is stated that it is known from DE-PS 811 837 to wind the strip up completely on the coiler mandrel of the coiler furnace. However, this complete winding up of the strip makes it necessary to provide special strip scrapers that make it possible to wind up the strip in the case of a reversal of the direction of rotation of the coil.

[0013] A similar device is also known from U.S. 2,628,790.

[0014] All of the known coiler furnaces have in common that they are very complex and possess many mechanical and moving components inside the coiler furnace.

[0015] The object of the invention is therefore to simplify the known mechanically complex constructions and to avoid the above-referenced disadvantages.

[0016] This object is attained according to the invention in that with a coiler furnace according to the preamble of claim **1** the coiler furnace is embodied in the furnace chamber with only one furnace roller.

[0017] The preamble of claim **1** is known from WO 03/048397 [U.S. Pat. No. 7,155,950].

[0018] Further embodiments of the coiler furnace result from the relevant dependent claims.

[0019] With the device according to the invention it is possible to store a metal strip completely inside the coiler furnace. To this end, the coil is prevented from coming undone after the end of the metal strip is no longer clamped in that a furnace roller bears on the coil. In principle the furnace roller can be placed at any position on the coil. However, in order to be able to control the strip end well it is advantageous to do this in the area of the upper half of the coil. The furnace roller, like the furnace drum, is installed in the coiler furnace. The furnace roller, like the furnace drum, is constructed with a hot jacket mounted on a cooled axle. This has the advantage that temperatures of over 950° C. can be achieved with the conventional heat resistant material of the roller jacket. Thus engaging the furnace roller with the coil leads to a negligible cooling at the engagement location. With thin strip thicknesses, e.g. less than 6 mm, a heating up of the placement location even occurs.

[0020] The pivots of the furnace roller are supported in two independent levers outside the furnace. The levers in turn are supported in bearing blocks that are mounted outside on the frame of the furnace. In order to be able to mount the furnace roller and lift it off again, a hydraulic cylinder or another type of actuator is attached to one or to both levers, this actuator also being supported on the frame of the furnace.

[0021] In order to minimize heat losses of the furnace where the furnace roller passes outside, shields are attached to the levers and close slots in the furnace wall that are necessary in order to pivot the furnace roller. The size of the slots is determined by the pivot angle of the furnace roller. The size of the shields is selected such that the slots are closed even in the uppermost as well as in the lowermost position of the furnace roller.

[0022] In order for the furnace roller to be exposed to the heat uniformly from all sides in the coiler furnace, it is driven. The drive means is, for example, an electric motor that is connected to the furnace roller via a jointed shaft. However, other drives are also conceivable, such as e.g. a fluid motor mounted directly on the furnace roller. A medium such as for example water, air, oil or the like is supplied to the fluid motor via corresponding feed lines. The advantage of a drive of this type is the compact construction of the drive system and its low weight compared to a jointed shaft.

[0023] If a coil is stored in the coiler furnace, the coiler is furnace is completely closed by appropriate embodiment of the furnace doors. The drum can also be rotated back and forth during the time in which the coil is stored in the coiler furnace. The angular range in which the drum can be rotated depends on the placement point of the furnace roller and on how far the strip end is wound up. By angularly oscillating the drum, the furnace roller also rotates and remains uniformly heated while the engagement site does not cool.

[0024] In order to convey the strip safely out of the coiler furnace, the furnace door with which the coiler furnace is closed is embodied such that the cover plate of the furnace door is lifted in order to guide the strip end in the coiler furnace while conveying it out.

[0025] A stripper is not necessary with the device according to the invention. The strip end will not adhere to the coil, since the strip end does not bear against/on the coil nor is it pressed against the coil by the furnace roller or rolled over by it.

[0026] An illustrated embodiment of the invention is described in more detail based on diagrammatic drawings. Therein:

[0027] FIG. **1** is a cross section through a coiler furnace with opened furnace door during winding up of the rolled strip;

[0028] FIG. **2** is a cross section through a coiler furnace with closed furnace door and rolled strip completely wound up;

[0029] FIG. **3** is a cross section through a coiler furnace with opened furnace door and a cover plate for guiding out the rolled strip;

[0030] FIG. **4** shows a first drive of the roller axle seen in the rolling direction;

[0031] FIG. **5** shows a second drive of the roller axle seen in the rolling direction.

[0032] FIG. **1** shows in cross section a coiler furnace **1** in which a rolled strip **2** is wound up on a furnace drum **3** in a furnace chamber **4**. The rolled strip **2** is here deflected to the drum **3** by a furnace door **5** carrying guide plates **6**. The furnace door **5** is attached to a roller rack **7** and comprises parts **8** and **9** pivotally connected to each other by a hinge **10**.

[0033] In the furnace chamber **4** the rolled strip **2** is pressed against the turns already wound up on the furnace drum **3** by a furnace roller **11** comprising a jacket **12** and an axle **13**. The pressure is exerted by levers **14** attached outside the coiler furnace **1**. The levers **14** are to this end coupled, for example, with respective hydraulic cylinders **15**. The roller axle **13** is moved in slots **16** formed in a housing of the coiler furnace **1**. The slots are covered by outer heat shields (not shown) attached to the levers **14**.

[0034] FIG. **2** shows the coiler furnace with the door **5** closed. The strip **2** is completely inside the furnace chamber **4**. The furnace drum **3** has been rotated such that the end of the rolled strip is moved to a position between the furnace roller **11** and the furnace door **5**.

[0035] To guide the rolled strip **2** out of the furnace chamber **4** as shown in FIG. **3** the furnace drum **3** is rotated such that the rolled strip **2** moves toward the furnace door **5**, especially toward the part **8**. In this case the furnace door **5** is not completely opened thereby, as moved downwards, but a cover plate **17** is rotated by means of an adjustment element **18** around a pivot **19**. This creates an opening in the furnace and guides the strip **2** out it onto the roller table.

[0036] FIG. **4** shows the drive of the coiler furnace seen in the rolling direction. In a first embodiment the drive is an electric motor coupled to the roller axle by a drive shaft.

[0037] A second embodiment is shown in FIG. **5**. The drive of the roller axle is here is a fluid motor attached to the roller

axle. With this n embodiment, where the drive is directly flange mounted, a more compact construction with low weight is achieved.

LIST OF REFERENCE NUMBERS

[0038] **1** Coiler furnace
[0039] **2** Rolled strip
[0040] **3** Furnace drum
[0041] **4** Furnace chamber
[0042] **5** Furnace door
[0043] **6** Guide plates
[0044] **7** Roller rack
[0045] **8** Part
[0046] **9** Part
[0047] **10** Door hinge
[0048] **11** Furnace roller
[0049] **12** Roller jacket
[0050] **13** Roller axle
[0051] **14** Lever
[0052] **15** Hydraulic cylinder
[0053] **16** Cut-outs
[0054] **17** Cover plate
[0055] **18** Adjustment element
[0056] **19** Pivot

1. A coiler furnace, in particular a coiler furnace for a Steckel rolling mill, in which a hot-rolled strip is wound and unwound on a furnace drum in a furnace chamber with back and forth transport, comprising guide plates for threading and guiding the rolled strip and mounted on a moveable door of the coiler furnace, the furnace door and the coiler furnace being separate units with the furnace door arranged on a part of a roller rack located below the coiler furnace and the furnace door being divided into at least two parts with both parts interconnected by a door hinge and pivotal wherein the coiler furnace is provided in the furnace chamber with only a single furnace roller.

2. The coiler furnace according to claim **1** wherein the furnace roller comprises a roller jacket and a roller axle.

3. The coiler furnace according to claim **2** wherein the roller jacket is made from a heat-resistant material.

4. The coiler furnace according to claim **2** wherein the roller axle is provided with interior cooling.

5. The coiler furnace according to **1** wherein the furnace roller bears above a rotation axis of the furnace drum against the strip.

6. The coiler furnace according to claim **1** wherein the furnace roller is driven.

7. The coiler furnace according to claim **6** wherein a drive of the furnace roller is as an electric or fluid motor.

8. The coiler furnace according to claim **1** wherein the part has on its outer end a pivot on which a cover plate with an adjustment element provided.

9. In combination with a Steckel mill, a coiler furnace comprising:

a housing formed with an opening but otherwise being generally closed;

a mandrel rotatable about a mandrel axis in the housing;

drive means for rotating the mandrel and winding a workpiece strip up on the mandrel into a coil;

a roller rack below the housing;

a two-part door assembly shiftable between an open position extending downward and guiding the workpiece strip on the rack upward into or downward out of the housing to or from the mandrel and a closed position fitted over and closing the opening and through an unloading position closely juxtaposed with the mandrel and deflecting a trailing end of the mandrel downward out of the opening;

a single roller inside the housing shiftable radially to press turns of the strip against the mandrel; and

actuator means outside the housing for pressing the roller against the strip and preventing same from unwinding.

10. The combination defined in claim **9** further comprising

control means for winding the strip up on the mandrel and stopping winding of the strip in a position with the trailing end of the strip between the roller and the opening an out of contact with the roller.

11. The combination defined in claim **9** wherein the two parts of the door assembly are pivoted on each other.

12. The combination defined in claim **9** wherein the roller lies above the roll axis.

13. The combination defined in claim **9** wherein the roller has ends projecting through respective slots in the housing, the combination further comprising:

levers outside the connected between the actuator means and the ends of the roller; and

shields on the levers closing the slots as the ends of the rollers move in the slots.

* * * * *