United States Patent [19]

Morrison

[11] **Patent Number: Des. 297,327**

[45] **Date of Patent: ** Aug. 23, 1988**

[54] **KEY PAD**

[75] Inventor: **W. Andrew Morrison**, Saratoga, Calif.

[73] Assignee: **Thumbscan, Inc.**, Oakbrook Terrace, Ill.

[**] Term: **14 Years**

[21] Appl. No.: **810,396**

[22] Filed: **Dec. 17, 1985**

[52] **U.S. Cl.** **D14/114**

[58] **Field of Search** ..... D14/100, 106, 107, 114; D18/7; 364/708; 340/700, 711, 710, 709, 706, 365 R, 365 UL; 235/145 R, 146; 200/5 R, 5 A; D13/12, 32, 38

[56] **References Cited**

U.S. PATENT DOCUMENTS

D. 283,895 5/1986 Grimes D14/114
D. 286,047 10/1986 Roots et al. D14/100
4,564,751 1/1986 Alley et al. ..... 364/708 X

Primary Examiner—Susan J. Lucas
Attorney, Agent, or Firm—Fliesler, Dubb, Meyer & Lovejoy

[57] **CLAIM**

The ornamental design for a key pad, as shown and described.

DESCRIPTION

FIG. **1** is a bottom, front, and right side isometric view of a keypad showing my new design;
FIG. **2** is a front elevational view thereof on a reduced scale;
FIG. **3** is a top plan view thereof on a reduced scale;
FIG. **4** is a left hand side elevational view thereof on a reduced scale;
FIG. **5** is a right hand side elevational view thereof on a reduced scale;
FIG. **6** is a bottom plan view thereof on a reduced scale;
FIG. **7** is a rear elevational view thereof on a reduced scale.

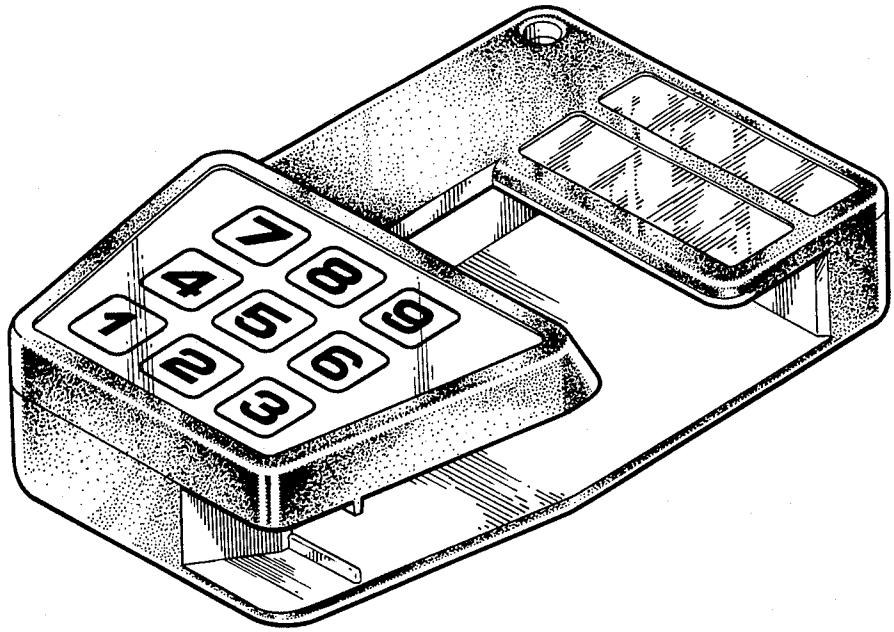

FIGURE 1

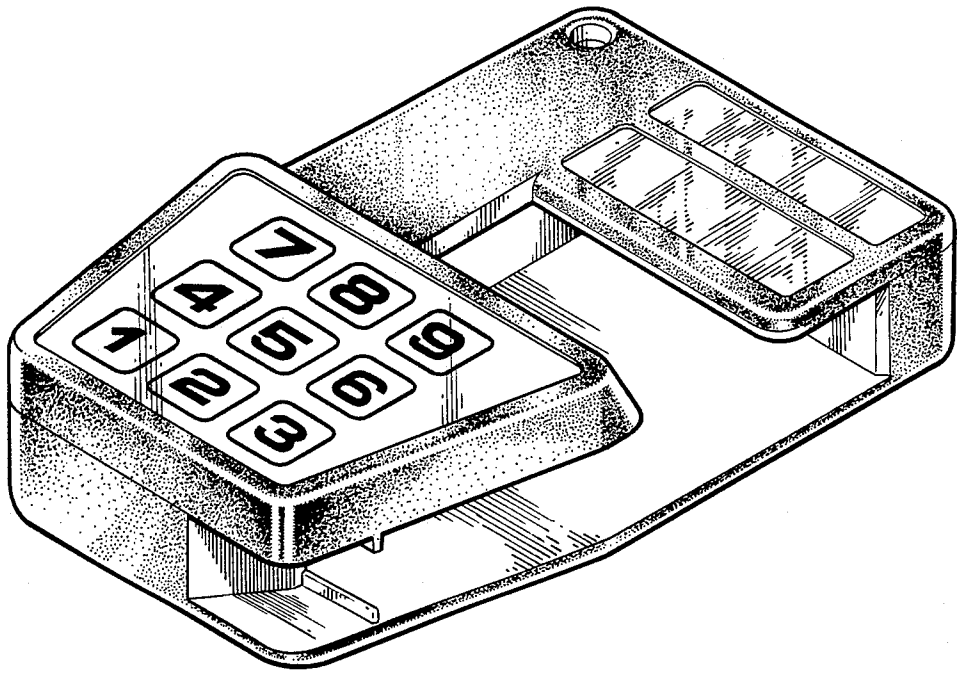

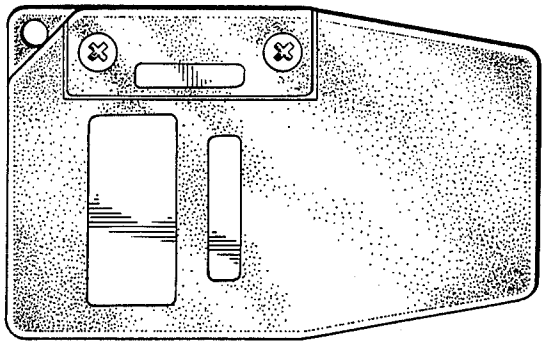

FIGURE 7

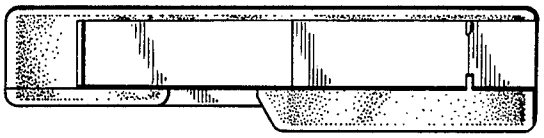

FIGURE 5



FIGURE 3

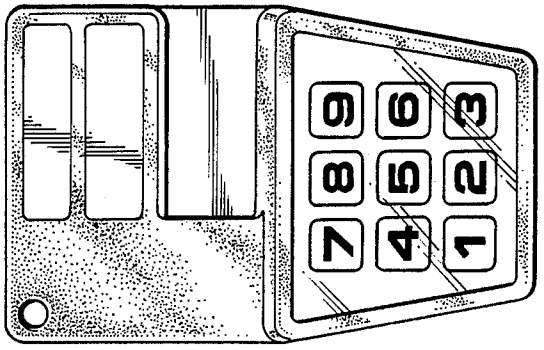

FIGURE 2

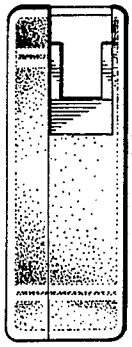

FIGURE 6

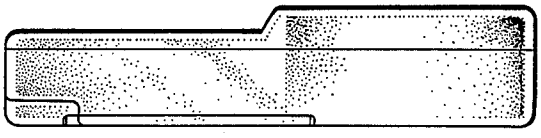

FIGURE 4