(12) INTERNATIONAL APPLICATION PUBLISHED UNDER THE PATENT COOPERATION TREATY (PCT)

(19) World Intellectual Property Organization
International Bureau

(43) International Publication Date
09 November 2023 (09.11.2023)

WIPO | PCT

(10) International Publication Number
WO 2023/214886 A1

(51) International Patent Classification:
G09F 3/20 (2006.01) *G09F 9/30* (2006.01)
G09F 7/20 (2006.01)

(21) International Application Number:
PCT/NO2023/050103

(22) International Filing Date:
04 May 2023 (04.05.2023)

(25) Filing Language: English

(26) Publication Language: English

(30) Priority Data:
20220519 05 May 2022 (05.05.2022) NO

(71) Applicant: **DORY AS** [NO/NO]; c/o Startuplab, Gaustadalléen 21, 0349 Oslo (NO).

(72) Inventors: **RAMBERG, Thomas**; Nordre gate 22A, 0551 Oslo (NO). **PENNE, Eirik**; Ørneveien 47, 1357 Bekkestua (NO). **WINDINGSTAD, Sigbjørn**; Bergensgata 26, 0468 Oslo (NO).

(74) Agent: **BRYN AARFLOT AS**; Stortingsgata 8, 0161 OSLO (NO).

(81) Designated States *(unless otherwise indicated, for every kind of national protection available)*: AE, AG, AL, AM, AO, AT, AU, AZ, BA, BB, BG, BH, BN, BR, BW, BY, BZ, CA, CH, CL, CN, CO, CR, CU, CV, CZ, DE, DJ, DK, DM, DO, DZ, EC, EE, EG, ES, FI, GB, GD, GE, GH, GM, GT, HN, HR, HU, ID, IL, IN, IQ, IR, IS, IT, JM, JO, JP, KE, KG, KH, KN, KP, KR, KW, KZ, LA, LC, LK, LR, LS, LU, LY, MA, MD, MG, MK, MN, MU, MW, MX, MY, MZ, NA, NG, NI, NO, NZ, OM, PA, PE, PG, PH, PL, PT, QA, RO, RS, RU, RW, SA, SC, SD, SE, SG, SK, SL, ST, SV, SY, TH, TJ, TM, TN, TR, TT, TZ, UA, UG, US, UZ, VC, VN, WS, ZA, ZM, ZW.

(54) Title: SIGN

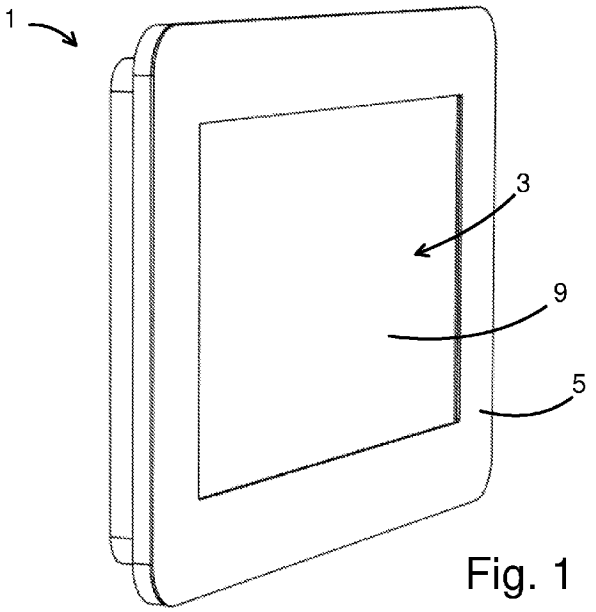

Fig. 1

(57) Abstract: A sign (1) comprising a mounting bracket (7), a display portion (3) with a display (9), wherein the display portion is detachably attached to the mounting bracket. It further has a wireless communication unit (51), a battery unit (13), and a control unit (50) connected to the display and to the communication unit. A power switch (30) is configured to be switched between a connected and disconnected mode and is arranged between the battery unit and the wireless communication unit. The display portion (3) is configured to be moved with respect to the mounting bracket (7), while still being attached to the mounting bracket, between an application position, wherein the power switch (30) is in the disconnected mode, and an editing position, wherein the power switch is in the connected mode. Fig. 2

WO 2023/214886 A1

[Continued on next page]

(84) **Designated States** *(unless otherwise indicated, for every kind of regional protection available)*: ARIPO (BW, CV, GH, GM, KE, LR, LS, MW, MZ, NA, RW, SC, SD, SL, ST, SZ, TZ, UG, ZM, ZW), Eurasian (AM, AZ, BY, KG, KZ, RU, TJ, TM), European (AL, AT, BE, BG, CH, CY, CZ, DE, DK, EE, ES, FI, FR, GB, GR, HR, HU, IE, IS, IT, LT, LU, LV, MC, ME, MK, MT, NL, NO, PL, PT, RO, RS, SE, SI, SK, SM, TR), OAPI (BF, BJ, CF, CG, CI, CM, GA, GN, GQ, GW, KM, ML, MR, NE, SN, TD, TG).

Declarations under Rule 4.17:

— *as to applicant's entitlement to apply for and be granted a patent (Rule 4.17(ii))*

Published:

— *with international search report (Art. 21(3))*

— *before the expiration of the time limit for amending the claims and to be republished in the event of receipt of amendments (Rule 48.2(h))*

SIGN

Technical Field

[0001] The present invention relates to a sign, such as a door sign, adapted to be attached on a vertical wall surface. The sign has a display that can be electrically edited.

Background Art

[0002] There are known various types of electric displays used or informative purposes and for decorative purposes.

[0003] Some displays are made such that once an image has been presented, the display can maintain the image even without having electric power connected. A type of display that has this characteristic is commonly referred to as electronic paper (e-paper) and a well-known brand is *e-ink*.

[0004] For some signs using such type of display, one can connect the sign to an editing unit (e.g. a smartphone, a computer or a tablet) with a wire. In such embodiments, the sign can be provided both with a new image as well as electric power for installing the new image on the display.

[0005] When a sign instead is provided with batteries and a wireless communication unit, one can instead use battery power for installing the new image on the display. However, to avoid draining the battery between each change of image, it is desirable to disconnect the battery during such time intervals.

[0006] Publication US20210183278A1 presents a sign having a communication unit, such that the images shown in its display can be altered.

[0007] Moreover, publication US20210372197A1 presents an electronic door plate with a wireless communication module.

[0008] An object of the present invention may be to provide a sign having a wireless communication unit and an electric display, which is configured to avoid battery consumption during intervals between image change.

[0009] A further object may be to provide a sign having a battery connection switch which is not left in a connected state during the time between image changes.

[0010] Another object may be to provide a sign having a battery connection switch that is non-visible but still possible to operate without dismantling the sign.

Summary of invention

[0011] According to the present invention, there is provided a sign comprising a mounting bracket, a display portion with a display, wherein the display portion is detachably attached to the mounting bracket. The sign further has a wireless communication unit, a battery unit, and a control unit connected to the display and to the communication unit. Moreover, the sign has a power switch configured to be switched between a connected and disconnected mode. the power switch is arranged between the battery unit and the wireless communication unit. The display portion is configured to be moved with respect to the mounting bracket, while still being attached to the mounting bracket, between an application position, wherein the power switch is in the disconnected mode, and an editing position, wherein the power switch is in the connected mode.

[0012] When stating that the control unit is connected to the display and to the communication unit, it shall be understood that this may also include embodiments wherein the communication unit is embedded with or is a part of the control unit.

[0013] While the power switch is arranged between the battery unit and the wireless communication unit, the power switch can also (e.g. in the same embodiment) be arranged between the battery unit and the control unit. In such embodiments, the control unit will be without power when the power switch is open.

[0014] The term mounting bracket shall be understood to mean any arrangement or device suitable for being attached to a surface, e.g. a vertical wall, and to which the display portion is configured to be releasably attached.

[0015] The display can be an electric display of the type wherein an image can be provided on the display when electric power is connected, and wherein the image remains on the display when electric power is removed.

[0016] Advantageously, the editing position of the display portion is a position which will be perceived as an erroneous position or an unnatural position when looking at the sign. In this manner, the user will not forget to disconnect the power switch after having edited the image on the display.

[0017] The editing position can be various positions, as for example discussed in the detailed example presentations below.

[0018] In some embodiments, the power switch may comprise a movable switch member comprising a switch interface member, and a switch contact member. The mounting bracket can have a switch actuator configured to engage the switch interface member to connect or disconnect the power switch, depending on the mutual position between the display portion and the mounting bracket.

[0019] The display portion can be configured to rotate with respect to and while remaining attached to the mounting bracket, between the application position and the editing position. By rotating the display portion out of its natural position (typically wherein the edges of a rectangular shape are horizontal and vertical), the user will tend not to forget to disconnect the power switch.

[0020] Moreover, in an advantageous embodiment, the display portion can be configured to be rotated, with respect to the mounting bracket, from the application position, beyond the editing position, into a detachment position wherein the display portion disengages from the mounting bracket.

[0021] The display portion can in some embodiments have a main actuator chamber and an auxiliary actuator chamber configured to receive a first switch actuator and a second switch actuator of the mounting bracket, or the second switch actuator and the first switch actuator, respectively. With such embodiments, the display portion of the sign can be installed in two distinct orientations without needing to reorient the mounting bracket.

[0022] The sign may further comprise a removable securing pin extending through a pin aperture of the display portion and a securing aperture of the mounting bracket. The securing pin prevents rotation of the display portion, with respect to the mounting bracket, from the editing position into the detachment position. In this manner, the display portion of the sign will be less exposed to theft.

[0023] In some embodiments, the sign further comprises a frame extending about the display. Typically, such frames can be easily replaced, such that the user may frequently replace them according wish.

Detailed description of the invention

[0024] While various features of the present invention have been discussed in general terms above, some non-limiting examples of embodiment will be presented in the following with reference to the drawings, in which

Fig. 1 is a perspective view of a sign according to the present invention;

Fig. 2 is an exploded, perspective view of the sign shown in Fig. 1;

Fig. 3, Fig. 4, and Fig. 5 are schematic front views of the sign when in an application position, editing position, and a later application position, respectively;

Fig. 6, Fig. 7, and Fig. 8 are rear views of the display portion and the mounting bracket, illustrating the sign when in an application position, an editing position, and a detachment position, respectively;

Fig. 9 is a perspective view showing parts of the display portion;

Fig. 10 is another perspective view showing parts of the display portion;

Fig. 11 and Fig. 12 are enlarged views of the images shown in Fig. 8 and Fig. 9;

Fig. 13 and Fig. 14 are front views of the battery unit and the power switch, in a disconnected and a connected mode, respectively;

Fig. 15 depicts an enlarged portion of the perspective view of Fig. 12;

Fig. 16 is an exploded, perspective view of the display portion;

Fig. 17 and Fig. 18 are schematic side views illustrating an alternative embodiment of the sign according to the invention;

Fig. 19 and Fig. 20 are schematic side view illustrating a possible power switch for the embodiment shown in Fig. 17 and Fig. 18;

Fig. 21 is a rear view of an embodiment of the sign according to the invention; and

Fig. 22 is a schematic diagram showing some electric components of the sign.

[0025] Fig. 1 shows a sign 1 according to the invention with a perspective view. It has a display portion 3 configured to present an image on its display 9. Moreover, in this embodiment, the sign 1 also has a frame 5 encircling the display portion 3. In other embodiments, the sign 1 may be without the frame 5.

[0026] Fig. 2 shows the same sign as in Fig. 1, however with the frame 5 detached from the display portion 3. Moreover, a mounting bracket 7 is shown. The mounting bracket 7 will typically be attached to a vertical wall, such as the wall of a building. The display portion 3 is configured to be releasably attached to the mounting bracket 7. The mounting bracket 7 comprises an engagement arrangement 7a, by means of which the display portion 3 can be attached to and detached from the mounting bracket 7 with a rotational movement. The details of the engagement arrangement 7a will not be discussed in detail herein.

[0027] The display portion 3 comprises a display 9 configured for presenting an image. The image can be communicated to the sign 1 wirelessly. Moreover, once the image has been provided on the display 9, the image will remain on the display even without continuously providing electric power to the display 9.

[0028] As will be discussed in more detail below, the sign 1 comprises a battery unit and a wireless communication unit, such that the image presented on the display 9 can be controlled by an external device. The external device can typically be a smartphone, a tablet, or other device with a wireless communication interface.

[0029] While some main components of the sign 1 now has been briefly introduced, reference is made to Fig. 3 to Fig. 5.

[0030] Fig. 3 is a front view of the sign 1, wherein a first image is presented on the display 9. In the shown embodiment the image contains text, and the sign is used as a name sign, e.g. as a door plate. When the display portion 3, with the display 9, is in the horizontal position shown in Fig. 3, a power switch (not shown in Fig. 3 to Fig. 5) is in its disconnected (i.e. open) state. Consequently, there is no consumption of battery power taking place. Herein, such a position is termed an application position, which is the position the display unit 3 will have when the battery unit (and the power switch) is disconnected.

[0031] When the user wishes to change the image on the display 9, the power switch must be connected (closed) to provide power to the wireless communication unit (not shown) and to the display portion 3. The power switch is connected (connected) by rotating the display portion 3 with respect to the mounting bracket 7, into an editing position as shown in Fig. 4. This provides power to the wireless communication unit and to the display portion 3, such that the user can change the image on the display 9 using the external device.

[0032] When the image has been changed, the user rotates the display portion 3 back into its application position. fig. 5 depicts the sign 1 having a new image installed on the display 9 and being turned back into the application position.

[0033] Notably, the application position is a position of the display portion 3 in which one normally would arrange the sign 1. In the shown embodiment, the overall rectangular shape of the sign 1 will in the application position have horizontal and vertical edges. The user may, however, certainly choose to attach the sign 1 to the attachment face (e.g. a wall) in an inclined position.

[0034] Fig. 6 and Fig. 7 depict the display portion 3 with and the mounting bracket 7 when in the application position and in the editing position, respectively. As appears from the figures, the mounting bracket 7 remains in its fixed position, while the display portion 3 is rotated.

[0035] Fig. 8 depicts the display portion 3 in a detachment position. With the present embodiment, the detachment position is reached by rotating the display portion 3, from the application position towards and beyond the editing position. When in the detachment position, the display portion 3 can be pulled out of its engagement with the mounting bracket 7.

[0036] Reference is now made to Fig. 9 and Fig. 10, which illustrate the display portion 3 with a perspective front view and rear view, respectively.

[0037] The display portion 3 has a main body 11. In the shown embodiment, the main body 11 has a general rectangular shape. As the skilled person will appreciate, other shapes are possible, for instance a circular, oval, or other polygonal shape. Even three-dimensional shapes are possible, suitable for a display that is not restricted to two dimensions.

[0038] The display portion 3 has a battery unit 13. The battery unit 13 is configured for supplying battery power to different power consumers. Such power consumers comprise the display 9 itself (not shown in Fig. 9 and Fig. 10) and a PCB 15 (printed circuit board). The PCB 15 comprises a wireless communication unit (not shown) and a display control unit (not shown) for controlling the display 9.

[0039] The battery unit 13 has a battery compartment 17. Fig. 9 shows the rear side of the battery compartment 17, while the battery compartment 17 is better visible in Fig. 10. In Fig. 10 there are also shown battery contacts 19, configured to electrically contact the respective poles of the batteries (not shown). In the shown embodiment, the battery unit 13 is configured to have two batteries, while other embodiments may have less or more.

[0040] Also shown in Fig. 9 and Fig. 10 are a main actuator chamber 21a and an auxiliary actuator chamber 21b. In the shown embodiment, the main and auxiliary actuator chambers 21a, 21b are arranged in the main body 11 of the display portion 3. The function of the main and auxiliary actuator chambers 21a, 21b will become apparent by the discussion below. Notably, in some embodiments, only one actuator chamber, namely the main actuator chamber 21a, would suffice.

[0041] Fig. 11 is an enlarged portion of Fig. 10, illustrating the battery unit 13 and a portion of the display unit 3 in better detail.

[0042] Arranged in the main actuator chamber 21 there is arranged a switch interface member 23. The switch interface member 23 is part of a movable switch member 25, which is visible in Fig. 12. The movable switch member 25 is configured to be moved by engagement of the switch interface member 23, towards and into abutment against a switch contact member 27, which is also shown in Fig. 12. The switch interface member 23, the movable switch member 25 and the switch contact member 27 constitute a power switch 30.

[0043] Fig. 13 and Fig. 14 depict the function of the power switch 30 in better detail. In Fig. 13, the power switch 30 is in an open, i.e. not connected, position. The movable switch member 25 is not in contact with the switch contact member 27.

[0044] In the situation shown in Fig. 14, the switch interface member 23 has been engaged, causing the movable switch member 25 to move against and into abutment

with the switch contact member 27. The power switch 30 is thus in a closed (connected) state.

[0045] In Fig. 13 and Fig. 14, a pair of batteries 29 are installed in the battery compartment 17.

[0046] The movable switch member 25, and possibly also the switch contact member 27, can advantageously be made of flexible metal sheet pins.

[0047] Fig. 15 depicts an enlarged portion of Fig. 9 and Fig. 12. The movable switch member 25 comprises a curved part 26 where the switch interface member 23 is arranged. Moreover, a portion of the curved part 26 protrudes into the main actuator chamber 21a through an interface member aperture 31 arranged in a chamber wall 33.

[0048] As shown in Fig. 2, the mounting bracket 7 comprises a first switch actuator 35a and a second switch actuator 35b. When the display portion 3 (cf. Fig. 10) is connected to the mounting bracket 7 (cf. Fig. 2), the first and second switch actuators 35a, 35b will extend into the main actuator chamber 21a and the auxiliary actuator chamber 21b, or vice versa. When in the application position, the switch actuator 35a, 35b will not abut against the switch interface member 23 (at least not such as to close the power switch 30). However, by rotating the display portion 3 with respect to the mounting bracket 7, one of the switch actuators 35a, 35b will abut against and move the switch interface member 23, so that the power switch closes (cf. Fig. 14).

[0049] If rotating the display portion 3 even further, into the detachment position, the switch actuator 35a, 35b will again disengage from the switch interface member 23, leaving the power switch 30 in the disconnected state.

[0050] The skilled reader will appreciate that only one of the two switch actuators 35a, 35b would suffice. Correspondingly, in such embodiments one would not require the auxiliary actuator chamber 21b (Fig. 10). However, by having two switch actuators 35a, 35b and both the main actuator chamber 21a and the auxiliary actuator chamber 21b, the display portion 3 can be attached to the mounting bracket 7 in two distinct position, 180 degrees apart.

[0051] Fig. 16 depicts parts of the display portion 3 with an exploded, perspective view. The main housing 11 receives the PCB 15 and the display 9 itself is arranged

over the PCB 15. A display frame 37 is arranged to maintain the display 9 in position on the main housing 11. To protect the batteries 29, a battery cover 39 is provided.

[0052] With the embodiment discussed above, the power switch 30 is operated by rotating the display portion 3 with respect to the mounting bracket 7, about an axis extending orthogonally to the display 9.

[0053] Fig. 17 to Fig. 20 schematically illustrate an alternative embodiment. In this embodiment, the display portion 3 is pivoted about an axis extending in parallel with the display 9. Fig. 17 depict the display portion 3 in the application position, while Fig. 18 depicts the display portion 3 in the editing position. The mounting bracket 7 is attached to a wall 50. There are various ways to provide a power switch 30 that will connect in the editing position and disconnect in the application position.

[0054] Fig. 19 and Fig. 20 schematically depict a possible power switch 30 for this embodiment. When in the application position, the first switch actuator 35a abuts against the movable switch member 25. This abutment keeps the movable switch member 25 out of contact with the switch contact member 27. When the display portion 3 is pivoted into its editing position, the first switch actuator 35a will disengage from the movable switch member 25, such that the latter moves into contact with the switch contact member 27. As the skilled person will appreciate, the movable switch member 25 has a spring characteristic and is biased towards the contact position.

[0055] Fig. 21 depicts the mounting bracket 7, the display portion 3, and the frame 5 with a rear view, and when in the application position. A securing pin 41 has been inserted through a pin aperture 43 of the display portion 3 and into a securing aperture 45 arranged in the mounting bracket 7. The securing aperture 45 is sufficiently wide to allow the user to move the display portion between the application position and the editing position. However, the securing pin 41 will prevent the display portion 3 from being moved into the detachment position. Thus, to detach the display portion 3 from the mounting bracket 7, the securing pin 41 must first be removed.

[0056] In the shown embodiment, the securing pin 41 has a pin head 47 which is embedded in a pin-receiving recess 49 in the frame 5.

[0057] Fig. 22 is a diagram depicting a control unit 50 in the form of a CPU installed on the PCB 15. The control unit 50 connects to the display 9 and to a wireless communication unit 51. Also shown is the battery unit 13 which is connectable to the control unit 50 using the power switch 30.

[0058] Also shown in Fig. 22 is an external device 60, here in the form of a smartphone, by means of which the user can edit the image on the screen 9 when the power switch 30 is closed (connected).

Claims

1. A sign (1) comprising
   - a mounting bracket (7);
   - a display portion (3) with a display (9), wherein the display portion is detachably attached to the mounting bracket;
   - a wireless communication unit (51);
   - a battery unit (13);
   - a control unit (50) connected to the display and to the communication unit;

characterized in that the sign (1) further comprises
   - a power switch (30) configured to be switched between a connected and disconnected mode, arranged between the battery unit (13) and the wireless communication unit (51);

wherein the display portion (3) is configured to be moved with respect to the mounting bracket (7), while still being attached to the mounting bracket, between an application position, wherein the power switch (30) is in the disconnected mode, and an editing position, wherein the power switch is in the connected mode.

2. A sign (1) according to claim 1, **characterized in** that
   - the power switch (30) comprises a movable switch member (25) comprising a switch interface member (23), and a switch contact member (27),
   - the mounting bracket (7) comprises a switch actuator (35a) configured to engage the switch interface member (23) to connect or disconnect the power switch (30).

3. A sign (1) according to claim 2, **characterized in** that the display portion (3) is configured to rotate with respect to and while remaining attached to the mounting bracket (7), between the application position and the editing position.

4. A sign (1) according to claim 3, **characterized in** that the display portion (3) is configured to be rotated, with respect to the mounting bracket (7), from the application position, beyond the editing position, into a detachment position wherein the display portion (3) disengages from the mounting bracket (7).

5. A sign (1) according to any one of the preceding claims, **characterized in** that the display portion (3) comprises a main actuator chamber (21a) and an auxiliary actuator chamber (21b) configured to receive a first switch actuator (35a) and a second switch actuator (35b) of the mounting bracket (7), or the second switch actuator (35b) and the first switch actuator (35a), respectively.

6. A sign (1) according to any one of the preceding claims, **characterized in** that it further comprises a removable securing pin (41) extending through a pin aperture (43) of the display portion (3) and a securing aperture (45) of the mounting bracket (7), wherein the securing pin (41) prevents rotation of the display portion (3), with respect to the mounting bracket (7), from the editing position into the detachment position.

7. A sign (1) according to any one of the preceding claims, **characterized in** that it further comprises a frame (5) extending about the display (9).

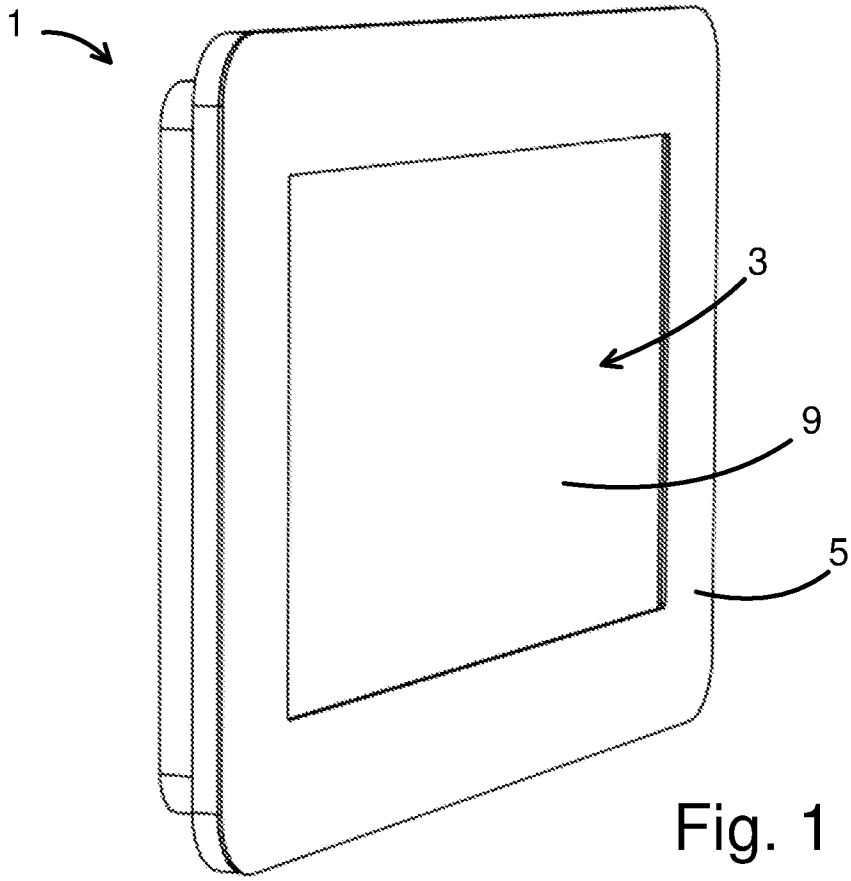

Fig. 1

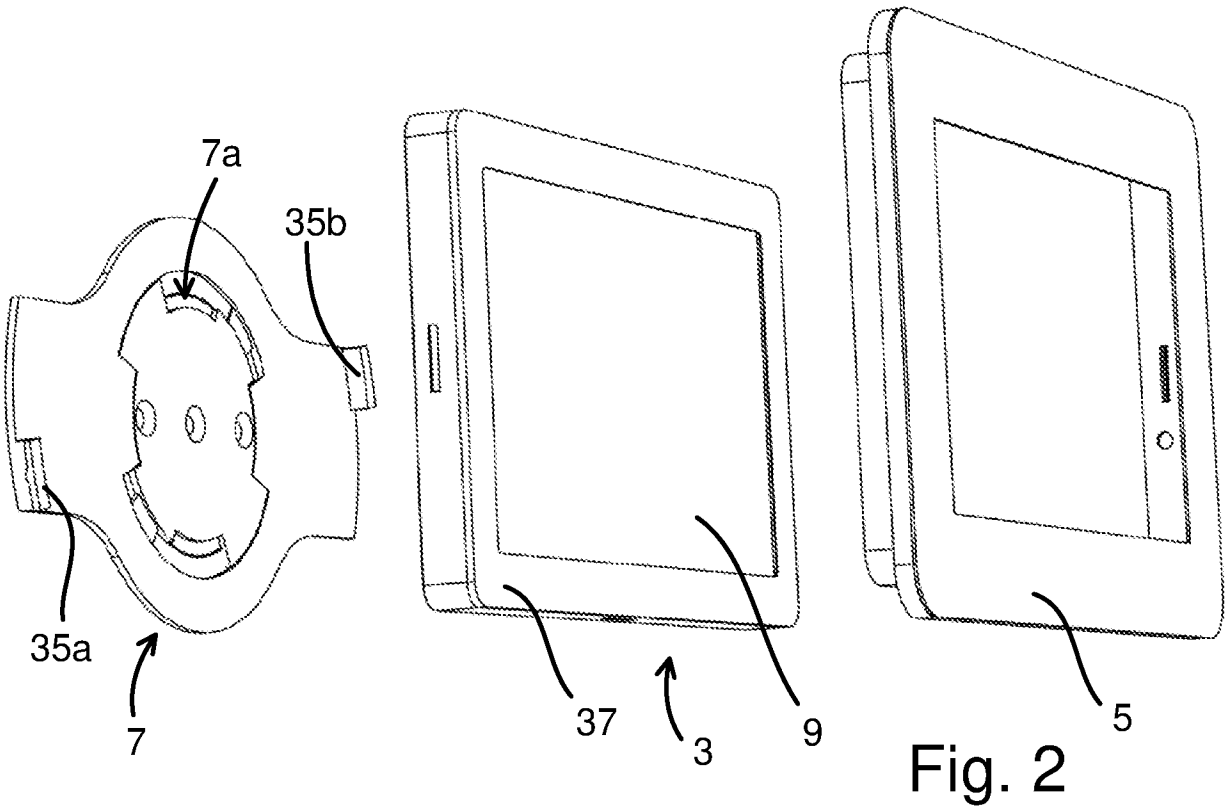

Fig. 2

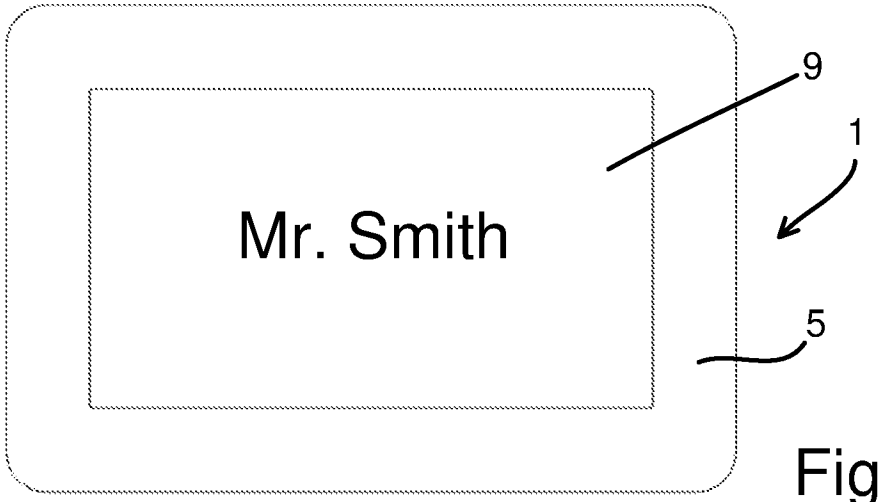

Fig. 3

Fig. 4

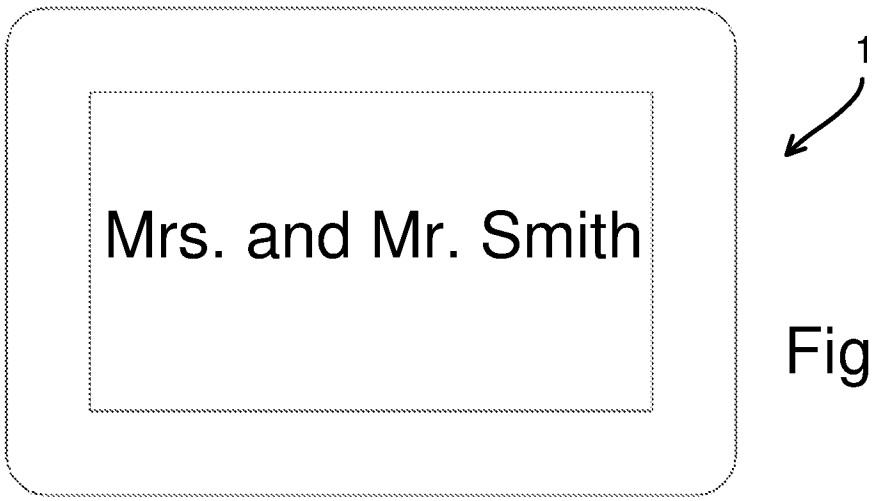

Fig. 5

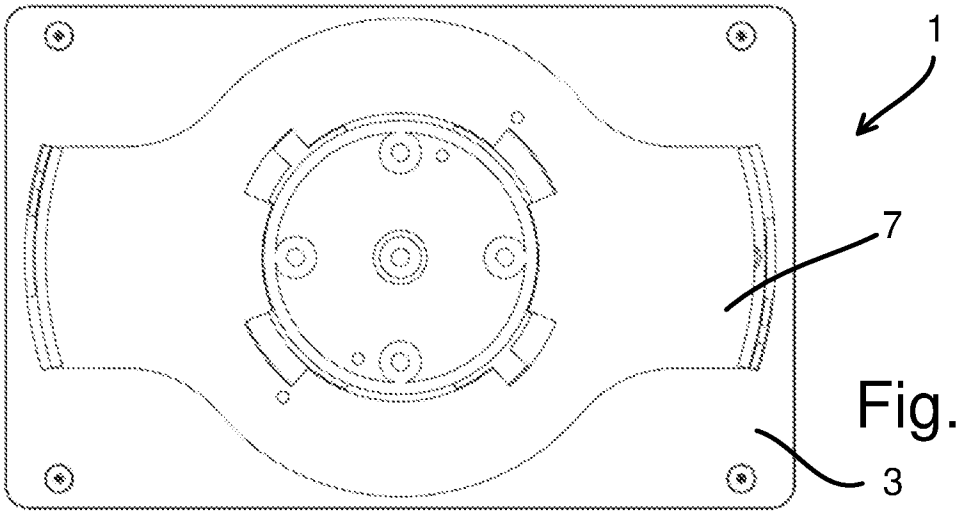

Fig. 6

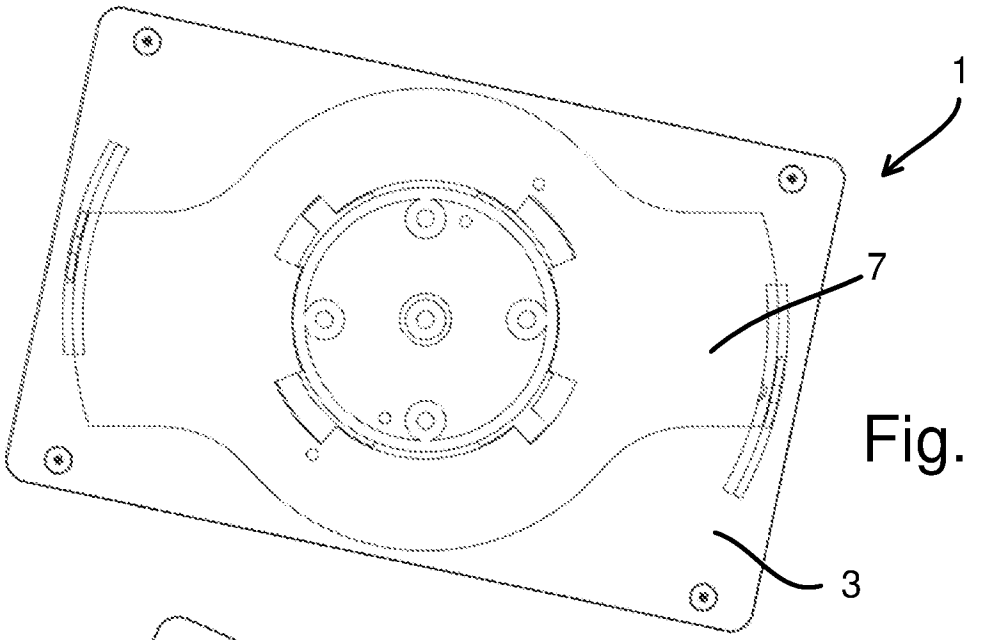

Fig. 7

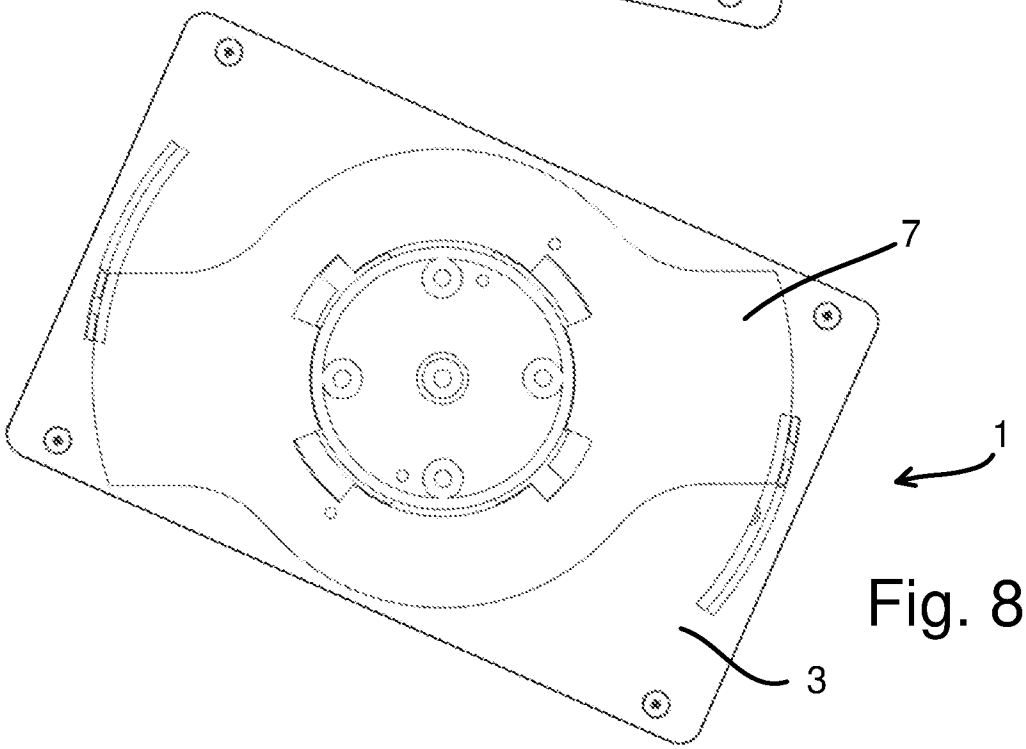

Fig. 8

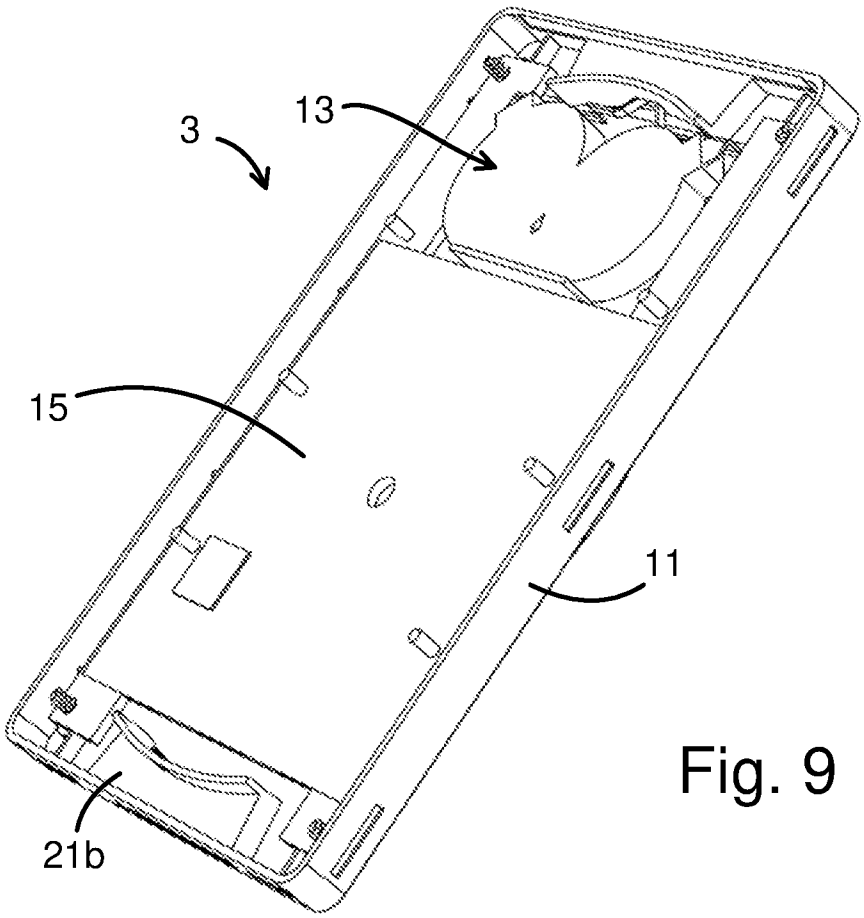

Fig. 9

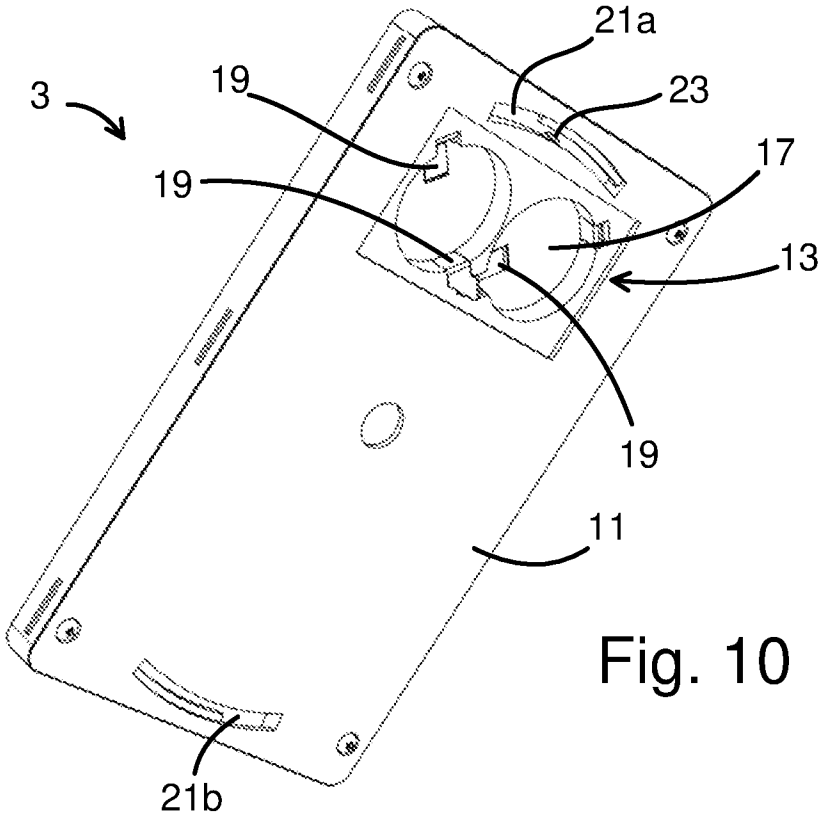

Fig. 10

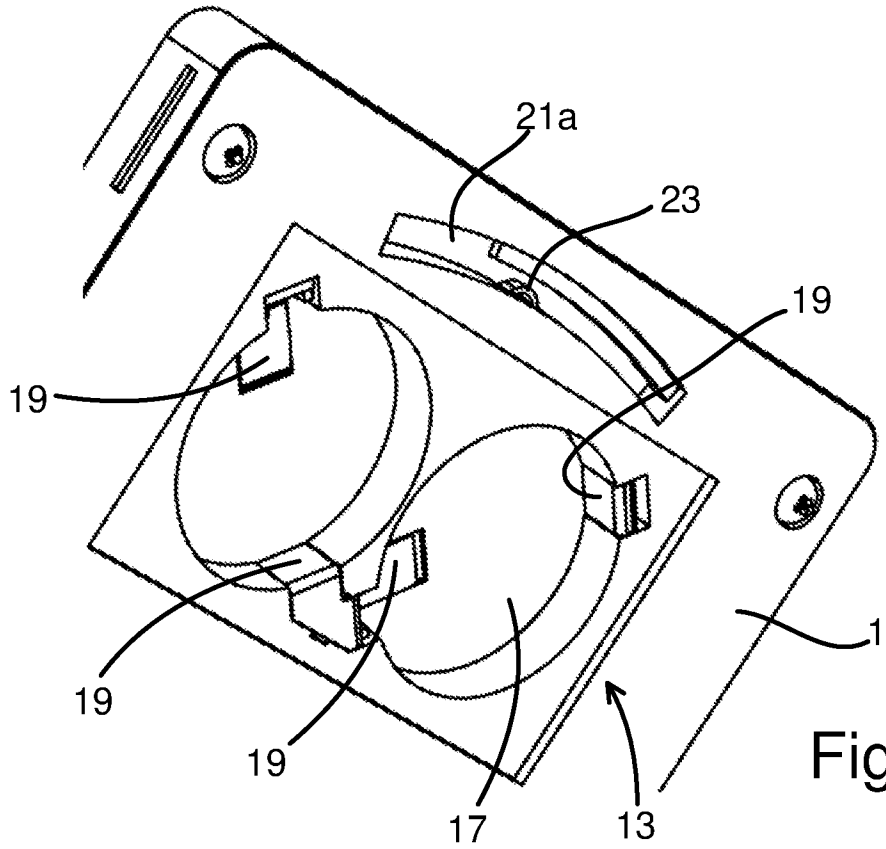

Fig. 11

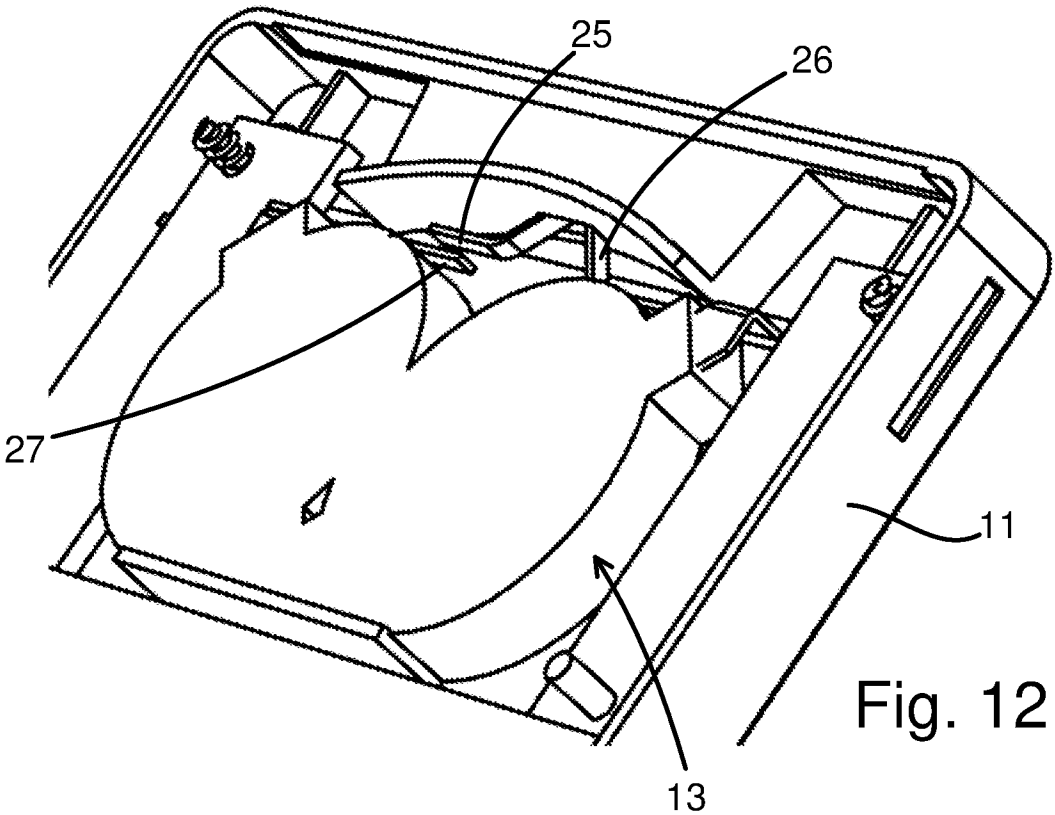

Fig. 12

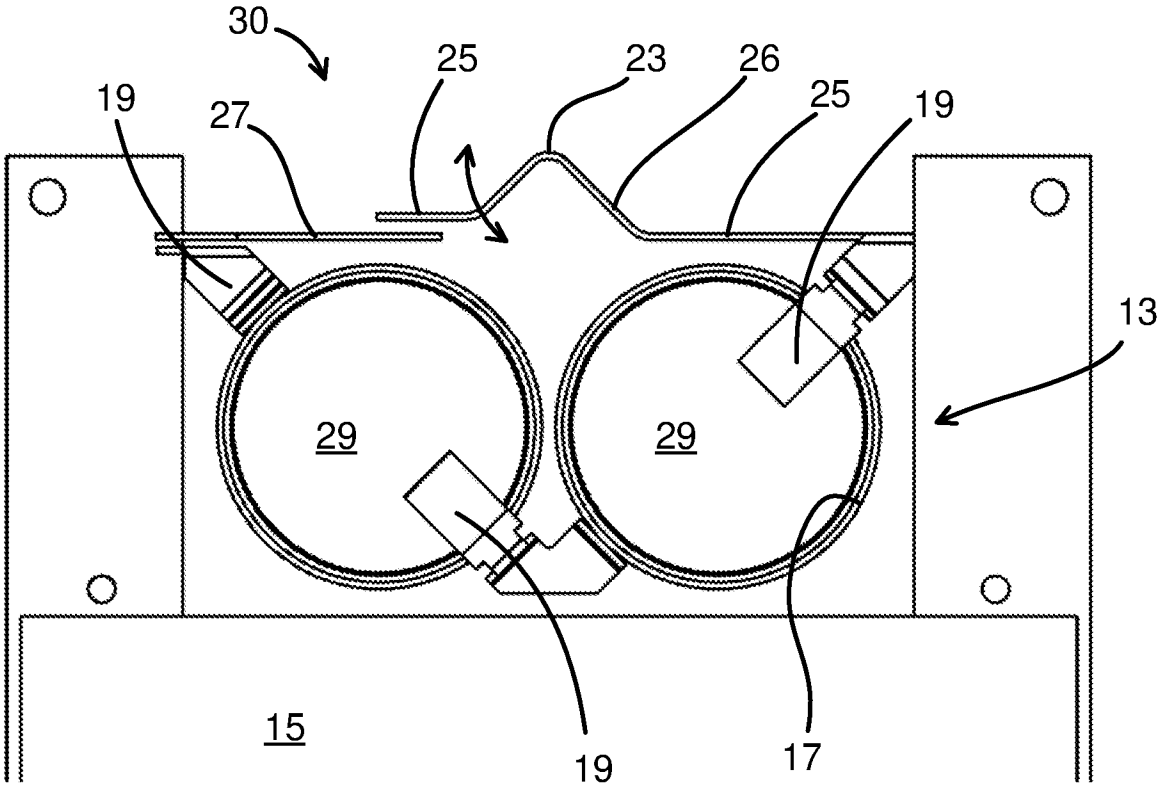
30
25
23
26
25
19
19
27
13
29
29
15
19
17

Fig. 13

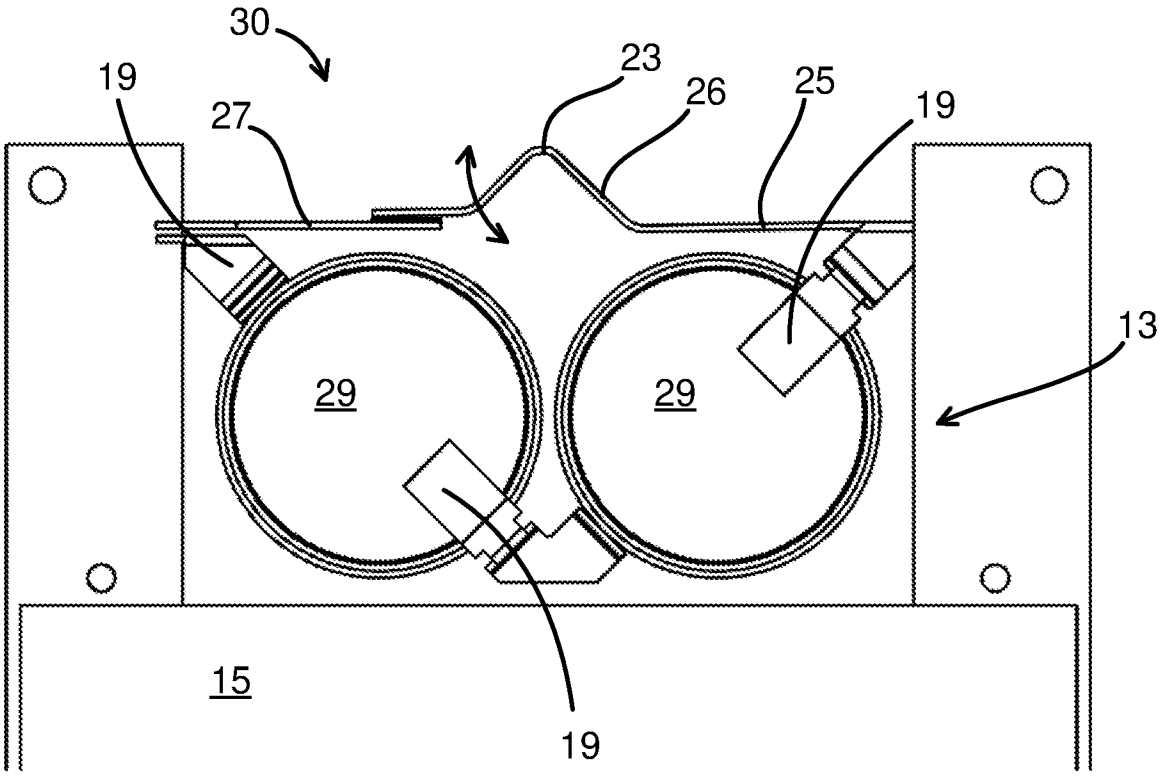
30
23
19
26
25
19
27
13
29
29
15
19

Fig. 14

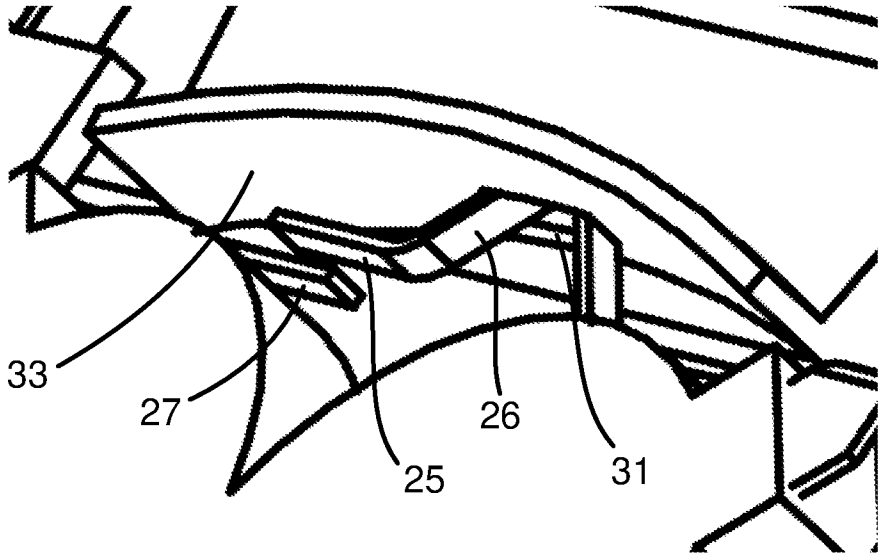

Fig. 15

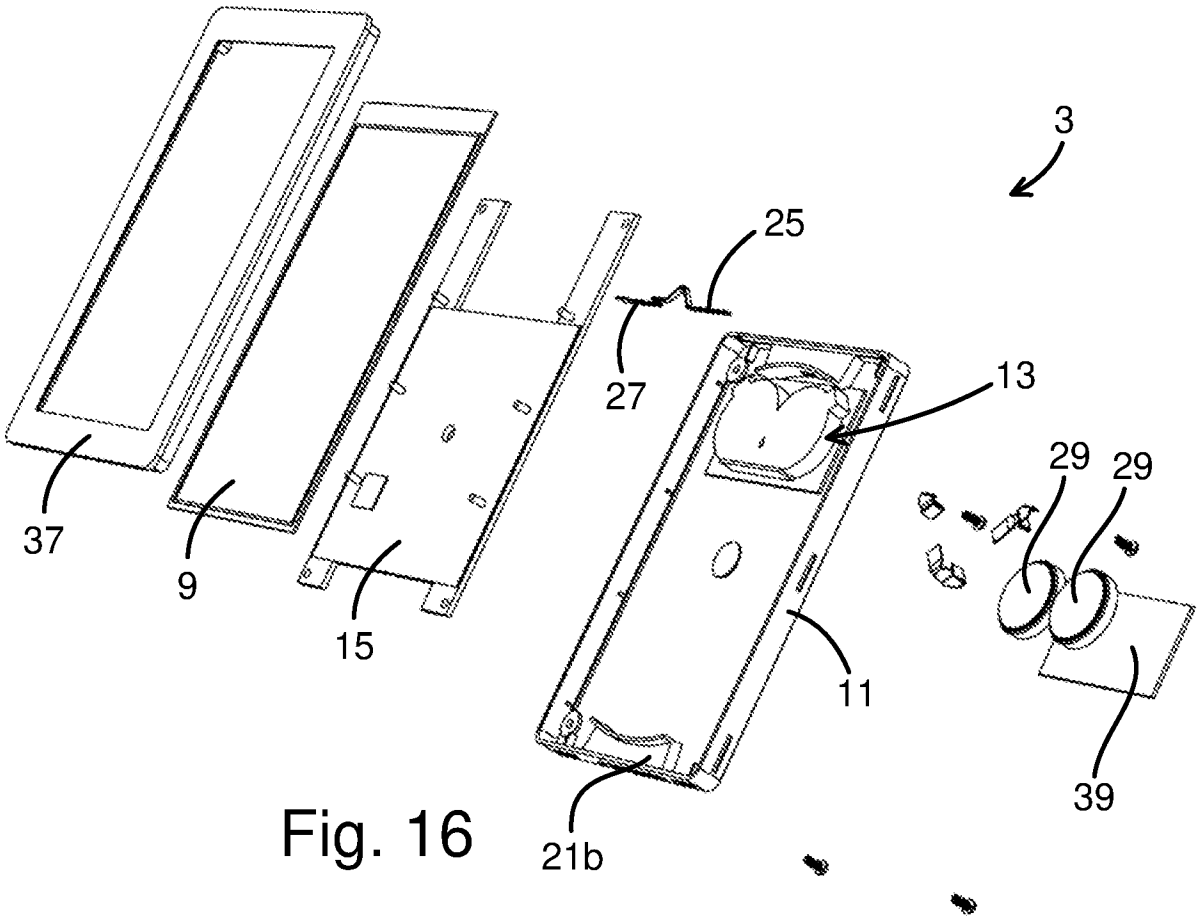

Fig. 16

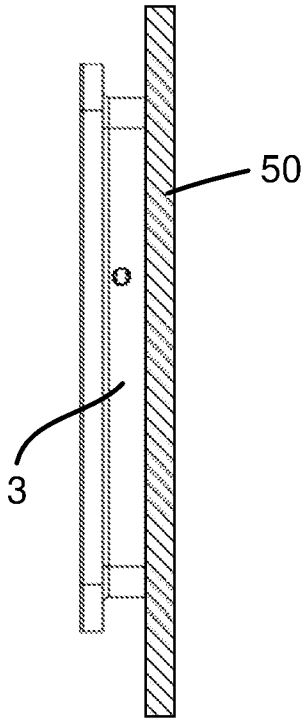

Fig. 17

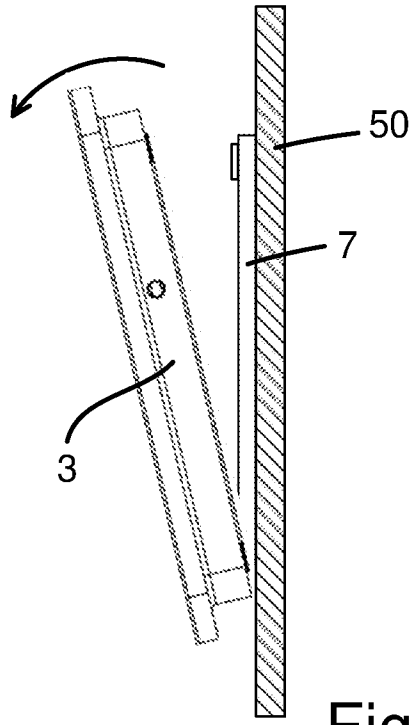

Fig. 18

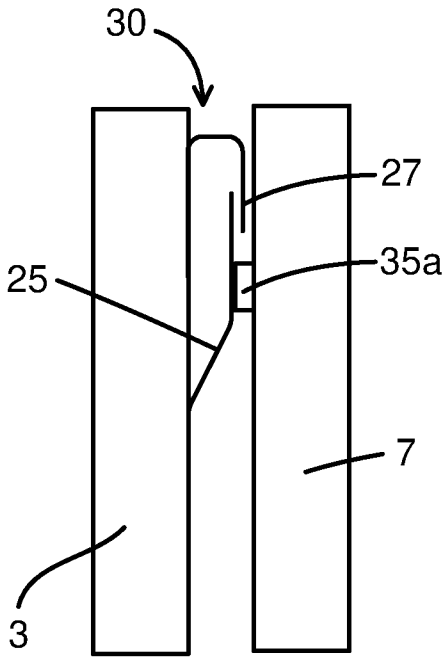

Fig. 19

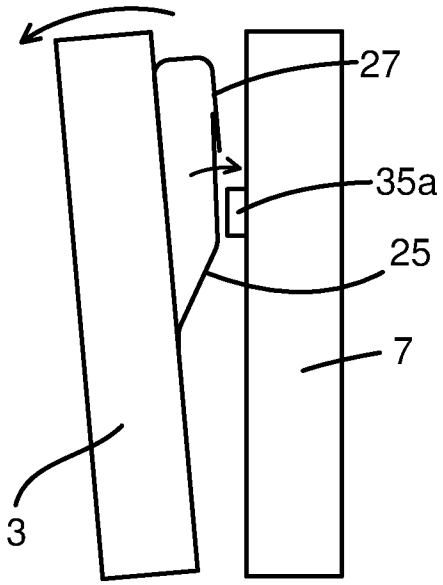

Fig. 20

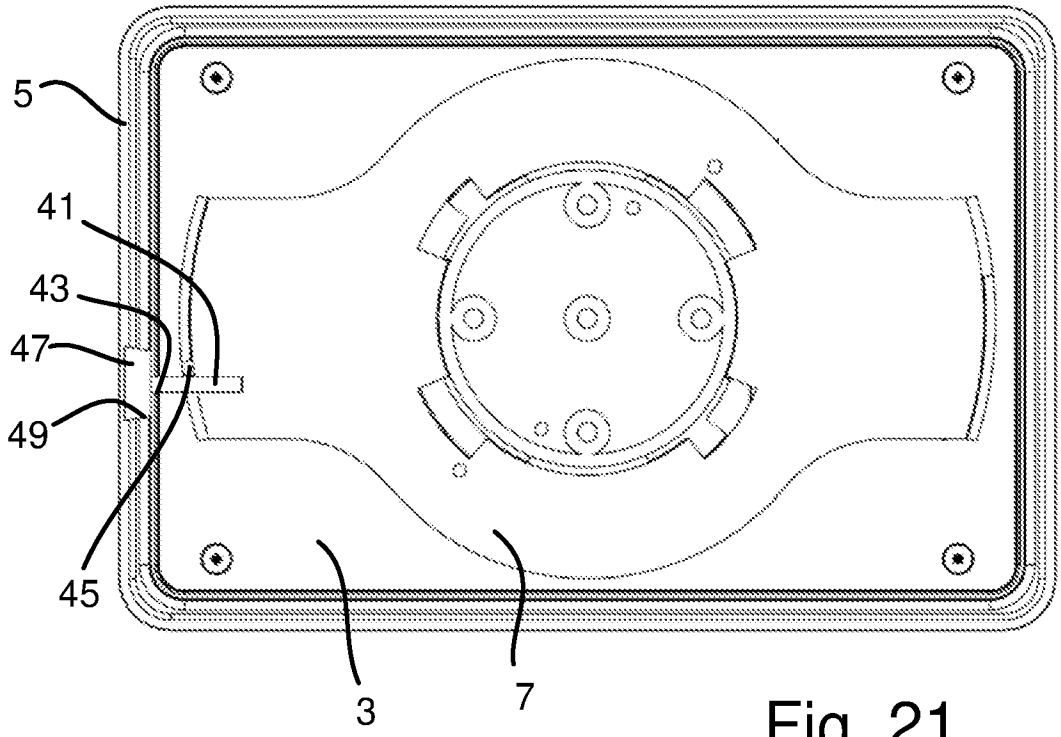

Fig. 21

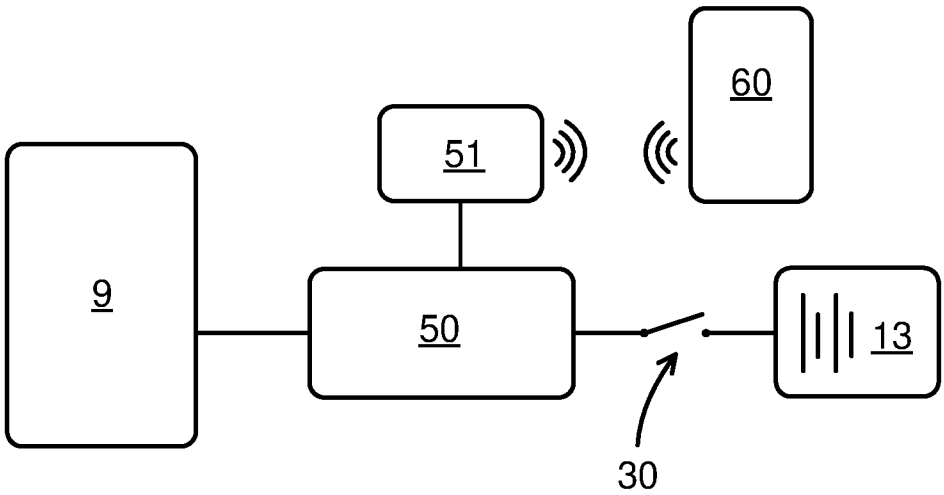

Fig. 22

INTERNATIONAL SEARCH REPORT

International application No
PCT/NO2023/050103

A. CLASSIFICATION OF SUBJECT MATTER
INV. G09F3/20 G09F7/20 G09F9/30
ADD.

According to International Patent Classification (IPC) or to both national classification and IPC

B. FIELDS SEARCHED

Minimum documentation searched (classification system followed by classification symbols)
G09F G06F H04N

Documentation searched other than minimum documentation to the extent that such documents are included in the fields searched

Electronic data base consulted during the international search (name of data base and, where practicable, search terms used)

EPO-Internal, WPI Data

C. DOCUMENTS CONSIDERED TO BE RELEVANT

Category*	Citation of document, with indication, where appropriate, of the relevant passages	Relevant to claim No.
X	KR 2014 0140325 A (LG ELECTRONICS INC [KR]) 9 December 2014 (2014-12-09) abstract; figures 1-10	1-4,7
X	US 2010/253864 A1 (FUJINAWA NOBUHIRO [JP] ET AL) 7 October 2010 (2010-10-07) paragraph [0013] - paragraph [0018] figures 1-3	1
A	CN 213 303 495 U (CNNHO JIQUN CO LTD) 28 May 2021 (2021-05-28) figures 1-7	1-7
A	CN 110 767 076 A (NANJING LINGGAN HUYU NETWORK TECH CO LTD) 7 February 2020 (2020-02-07) abstract; figures 1-7	1-7

☐ Further documents are listed in the continuation of Box C.

☒ See patent family annex.

* Special categories of cited documents :

"A" document defining the general state of the art which is not considered to be of particular relevance

"E" earlier application or patent but published on or after the international filing date

"L" document which may throw doubts on priority claim(s) or which is cited to establish the publication date of another citation or other special reason (as specified)

"O" document referring to an oral disclosure, use, exhibition or other means

"P" document published prior to the international filing date but later than the priority date claimed

"T" later document published after the international filing date or priority date and not in conflict with the application but cited to understand the principle or theory underlying the invention

"X" document of particular relevance;; the claimed invention cannot be considered novel or cannot be considered to involve an inventive step when the document is taken alone

"Y" document of particular relevance;; the claimed invention cannot be considered to involve an inventive step when the document is combined with one or more other such documents, such combination being obvious to a person skilled in the art

"&" document member of the same patent family

Date of the actual completion of the international search	Date of mailing of the international search report
24 August 2023	01/09/2023

Name and mailing address of the ISA/	Authorized officer
European Patent Office, P.B. 5818 Patentlaan 2 NL - 2280 HV Rijswijk Tel. (+31-70) 340-2040, Fax: (+31-70) 340-3016	Pantoja Conde, Ana

INTERNATIONAL SEARCH REPORT

Information on patent family members

International application No
PCT/NO2023/050103

Patent document cited in search report	Publication date	Patent family member(s)	Publication date
KR 20140140325 A	09-12-2014	NONE	
US 2010253864 A1	07-10-2010	CN 101860642 A	13-10-2010
		JP 4715943 B2	06-07-2011
		JP 2010243723 A	28-10-2010
		US 2010253864 A1	07-10-2010
CN 213303495 U	28-05-2021	NONE	
CN 110767076 A	07-02-2020	NONE	