D. R. McCLURE, JR.

MULTIPLE STAMP.

APPLICATION FILED MAY 27, 1918.

1,294,132.

Patented Feb. 11, 1919.

Fig. 1.

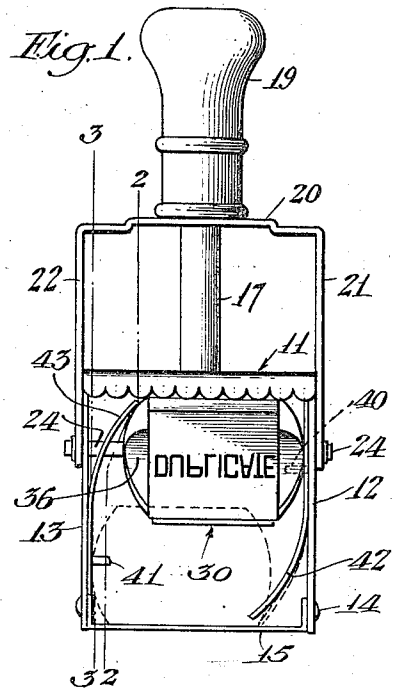

Fig. 2.

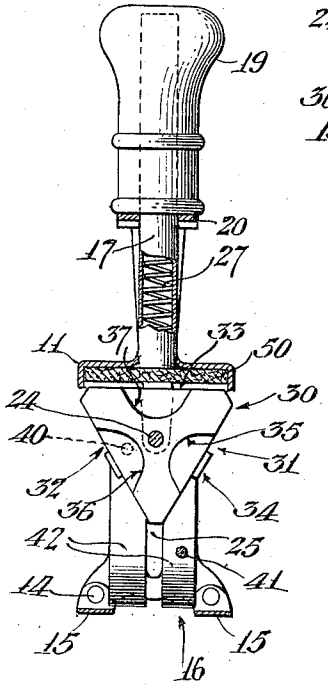

Fig. 4.

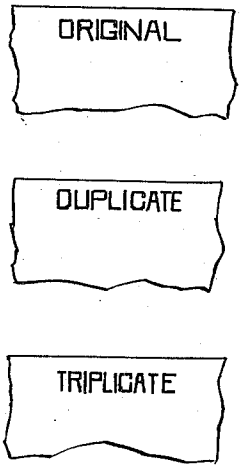

Fig. 3.

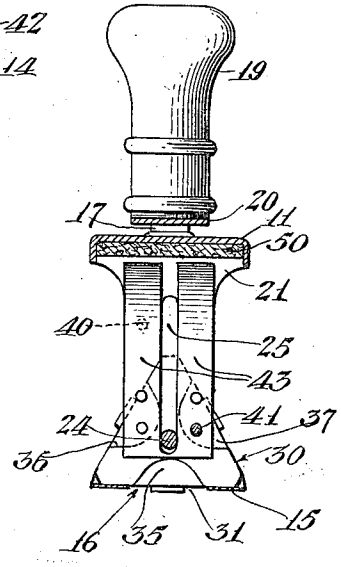

Inventor
Daniel R. McClure Jr.
by Parkam & Harris
Attorneys.

THE NORRIS PETERS CO., PHOTO-LITHO., WASHINGTON, D. C.

UNITED STATES PATENT OFFICE.

DANIEL R. McCLURE, JR., OF LOS ANGELES, CALIFORNIA.

MULTIPLE STAMP.

1,294,132. Specification of Letters Patent. Patented Feb. 11, 1919.

Application filed May 27, 1918. Serial No. 237,146.

To all whom it may concern:

Be it known that I, DANIEL R. McCLURE, Jr., a citizen of the United States, residing at Los Angeles, in the county of Los Angeles and State of California, have invented a new and useful Multiple Stamp, of which the following is a specification.

My invention relates to stamps such as are used in office work for stamping notations on papers of various kinds. Stamps of this character are commonly made with a single stamping face, the stamp in some instances carrying an inking pad and in others a separate pad being used for the purpose of inking the stamp. In many instances more than one copy of a document is made and the respective documents marked, as for instance, original, duplicate and triplicate, and ordinarily three different stamps are used for such marking, each stamp bearing a single legend.

It is the principal object of my invention to produce a stamp of the character described, of simple form and construction, in which a plurality of stamping faces are provided, each face bearing a different legend and the stamp operated by a single operating means for bringing the faces successively to the stamping position.

Other objects and advantages will appear hereinafter from the following description.

Referring to the drawings, which are for illustrative purposes only,

Figure 1 is a face view of a stamp embodying a form of my invention.

Fig. 2 is a vertical sectional view on line 2—2, Fig. 1.

Fig. 3 is a vertical sectional view on line 3—3, Fig. 1, and

Fig. 4 shows three separate pieces of paper as they would appear stamped consecutively with the three faces shown in the preceding figures.

The stamp consists of a cage comprising a head 11 from which extends downwardly side members 12 and 13, the lower end of the side members having secured thereto by suitable pins or rivets 14 a base 15 in which is formed a central opening 16 through which the printing or stamping is accomplished. Secured to the head 11 and extending upwardly therefrom is a hollow stem 17 which slidably extends into a handle 19 secured to a yoke 20. The arms 21 and 22 of the yoke extend downwardly on each side of the cage and have their lower ends connected by a shaft 24 which extends through vertical slots or ways 25 formed in the side members 12 and 13 respectively of the cage. Arranged in the stem 17 is a coiled spring 27 arranged to exert an upward pressure on the handle 19 to elastically hold the yoke 20 in its raised or upper position as shown in full lines in Figs. 1 and 2.

30 designates a printing block which is rotatably mounted on the shaft 24, the block being preferably frictionally held on the shaft against rotation, but being free to rotate thereon when actuated as hereinafter described. The printing block 30 is substantially triangular in cross-section having three printing faces 31, 32 and 33 upon each of which is mounted in a suitable manner appropriate type indicated at 34. Each end of the block 30 is provided with three cam faces 35, 36 and 37, the cam faces on one end of the block being arranged to be engaged by an upper finger 40 and the cam faces on the other end of the block being arranged to be engaged by a lower finger 41, both of which fingers are mounted respectively upon the side members 12 and 13 of the cage. 42 designates a pair of guide fingers secured at their upper ends to the side 12 of the cage, the lower ends of these fingers being curved and extending downwardly and inwardly into the path of the block, and 43 designates a pair of guide fingers secured at their lower ends to the side 13 of the cage, which fingers are curved, extending inwardly and upwardly into the path of the block. The fingers 42 and 43 are preferably elastic flat steel strips.

The stamp operates in the following manner:

Assuming the stamp to be in the position shown, the printing block is elastically held in raised or upper position by the spring 27, in which position the type on the upper face of the block is in engagement with a suitable inking pad 50 held within the head 11 in any suitable manner. Upon depression of the handle 19 the shaft 24 is carried downwardly by the arms 21 and 22, in which case, assuming the parts to be in the position shown in Fig. 3, the cam face 36 comes in contact with the pin 40 which causes the block to rotate a sixth of a revolution on the shaft 24 so that the face 31 of the printing block is parallel with the surface to be stamped. The continued downward movement of the block causes the block to be en-

gaged by the spring fingers 42 which move the block sidewise on the shaft 24 into the dotted line position shown in Fig. 1 where the type on the face 31 comes in contact with the paper upon which the impression is to be made. The release of pressure on the handle 19 permits the stamp to move upwardly thereby carrying the shaft 24 and the block thereon upward, and as the pin 41 is in engagement with one of the cam faces on its associated side of the block, the block is given a sixth of a turn on the shaft 24 bringing the face 32 of the block into engagement with the inking pad, and when in such position the face 33 is in the position in which the face 31 was originally at the beginning of the downward stroke of the handle 19. A repetition of the downward movement of the handle will successively bring each face of the block successively in engagement with the paper to be stamped, the action being a repetition of that just above described.

It will be readily understood with a block having three printing faces, as for example, one face having the word "original", the second face having the word "duplicate" and the third face having the word "triplicate" thereon, that three papers, original, duplicate and triplicate, may be very quickly stamped with a single stamp.

What I claim is:—

1. A stamping device comprising a supporting structure, a shaft vertically movable in said supporting structure, a printing block rotatably mounted on said shaft, a plurality of printing faces on said printing block, means for moving said shaft vertically in said supporting structure, and means for rotating said printing block to successively bring the faces thereon into printing position, said last named means consisting of fingers at each side of said printing block, and means for moving said printing block longitudinally on said shaft to bring said block into engagement with said fingers.

2. A stamping device comprising a supporting structure, a shaft vertically movable in said supporting structure, a printing block rotatably mounted on said shaft, a plurality of printing faces on said printing block, means for moving said shaft vertically in said supporting structure, and means for rotating said printing block to successively bring the faces thereon into printing position, said last named means consisting of fingers at each side of said printing block, one of said fingers being above the other, and elastic means for moving said block longitudinally on the shaft to bring the ends of said block into engagement with said fingers.

In testimony whereof I have hereunto set my hand at Los Angeles, California, this 18th day of May, 1918.

DANIEL R. McCLURE, Jr.

Copies of this patent may be obtained for five cents each, by addressing the "Commissioner of Patents, Washington, D. C."