J. D. WEAVER.

SPIRIT LEVEL.

APPLICATION FILED MAY 29, 1908.

902,269. Patented Oct. 27, 1908.

Fig. 1.

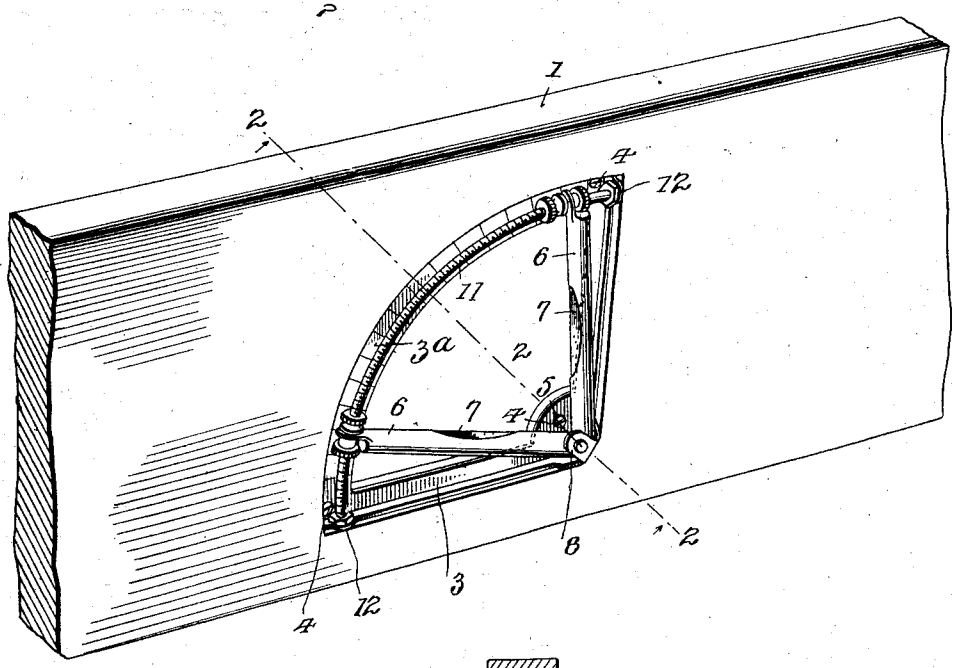

Fig. 2.

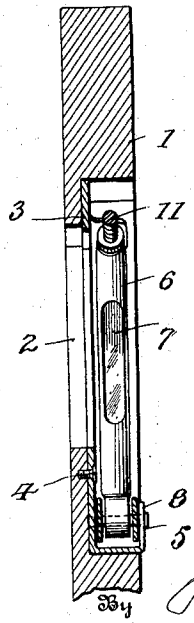

Witnesses

R. L. Norton.

L. B. Baker.

Inventor

John D. Weaver

By

Dunlap, Brown & Phelps Attorneys

THE NORRIS PETERS CO., WASHINGTON, D.C.

UNITED STATES PATENT OFFICE.

JOHN D. WEAVER, OF NAPLES, ILLINOIS.

SPIRIT-LEVEL.

No. 902,269. Specification of Letters Patent. Patented Oct. 27, 1908.

Application filed May 29, 1908. Serial No. 435,754.

To all whom it may concern:

Be it known that I, JOHN D. WEAVER, a citizen of the United States, residing at Naples, in the county of Scott and State of Illinois, have invented certain new and useful Improvements in Spirit-Levels, of which the following is a specification.

My invention relates to certain new and useful improvements in spirit levels, and the object of my invention is to provide a construction of this character which has a wide range of use and is simple in construction.

With these and other objects in view my invention consists in certain constructions, combinations and arrangement of parts, the preferred form of which will be first described in connection with the accompanying drawing and then the invention particularly pointed out in the appended claims.

Referring to the drawing wherein the same part is designated by the same reference numeral wherever it occurs Figure 1 is a perspective view of a level embodying my invention; Fig. 2 is a section taken on line 2, 2 of Fig. 1.

1 designates a board or other form of straight edge provided with a sector-shaped cut away portion 2. In the opening thus formed I mount the sector-shaped plate 3, the plate being supported in position by means of the screws 4, or other suitable securing devices. The outer circumference of the sector is, as shown, provided with a suitable scale 3^a, and at the apex formed by the straight sides of the sector I preferably bend up an ear 4 through which passes a pivot 5.

6 are a pair of tubes in each of which is mounted a spirit level 7. One of these tubes at one end is provided with a pair of ears 8, between which the projection 9 of the other tube is adapted to enter to form a hinge joint for the pair of tubes, by having the pivot 5 pass therethrough. At the outer end the tubes are provided with perforations 10 through which passes the arc shaped screw 11, the screw being secured at its opposite ends in the ears 12, turned up on the sides of the sector-shaped plate adjacent its outer edge. The curve of the screw 11 corresponds to the curve described by the perforated ends of the tubes 6. On the screw 11 I preferably mount two pairs of nuts 12, each pair being adapted to clamp the perforated end of one of the tubes between their adjacent faces.

From the above construction it will be seen that the spirit level carried in one of the tubes 6 will operate as a plumb, while the other will operate as a leveling device when the side of the straight edge in which the device is mounted is held against the surface to be tested. The sector does not have to be mounted in the straight edge with great exactness, as any error can be corrected by the adjustment of the tubes. Furthermore, by the adjustment of the tubes in accordance with the scale on the outer edge of the sector plate, it is possible to adjust the tubes so as to be able to determine degrees of inclination from either the horizontal or vertical planes. It will be further noted that the sides of the sector-shaped plates 3 are not at right angles to each other, but that the angle between the sides of the plate is greater than ninety degrees, in order to enable the spirit level to be adjusted to compensate for a deviation in the setting of the sector plate on the straight edge in either direction, from either the vertical or horizontal.

I realize that considerable variation is possible in the details of construction and arrangement of parts without departing from the spirit of my invention, and I therefore do not intend to limit myself to the specific form shown and described.

I claim—

1. The combination with a straight edge, of a sector-shaped plate secured thereto, a pair of tubes hinged to the plate, spirit levels carried in the tubes, and means for adjusting either of the tubes.

2. The combination with a straight edge, of a sector-shaped plate secured thereto, a pair of tubes pivoted at one end to the plate by a single pivot, a scale on the outer edge of the sector-shaped plate, and means for securing the outer ends of either of the tubes in any position of adjustment relative to the scale.

3. The combination with a straight edge, of a sector-shaped plate secured to the straight edge, a pair of tubes pivoted to the

plate by a single pivot, an arc shaped screw mounted adjacent the outer edge of the plate, the outer ends of the tubes being provided with perforations through which the screw passes, nuts mounted on the screw and adapted to secure the outer ends of the tubes in any position of adjustment.

In testimony whereof I affix my signature in presence of two witnesses.

JOHN D. WEAVER.

Witnesses:
AUSTIN TURNER,
JOHN HALEY.