Dec. 1, 1925 1,563,946

R. W. ATKINSON

HIGH TENSION TERMINAL

Filed Feb. 19, 1923 2 Sheets-Sheet 1

FIG. I.

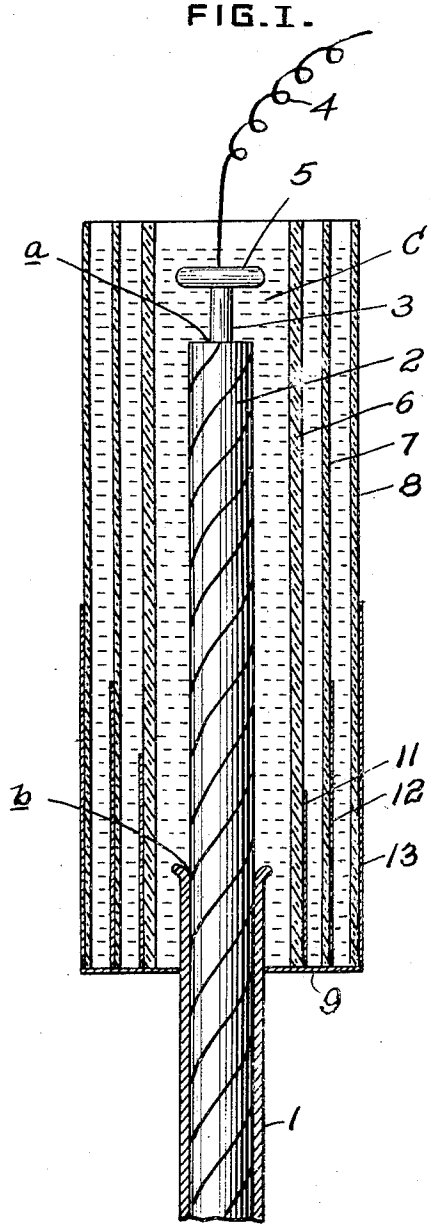

FIG. II.

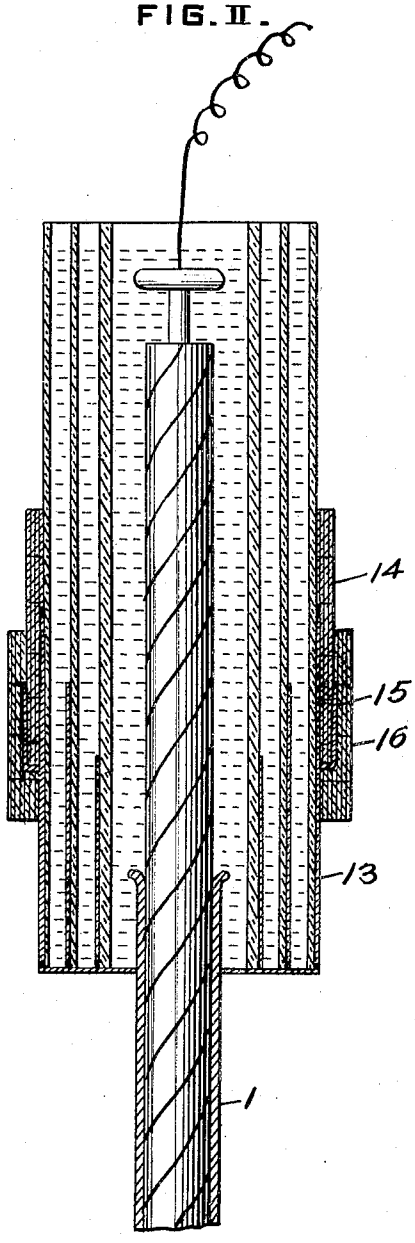

WITNESSES

J. Herbert Bradley.

Percy a. English.

INVENTOR

Ralph W. Atkinson

by Christy and Christy

his attorneys

Dec. 1, 1925. 1,563,946

R. W. ATKINSON

HIGH TENSION TERMINAL

Filed Feb. 19, 1923 2 Sheets-Sheet 2

FIG. III.

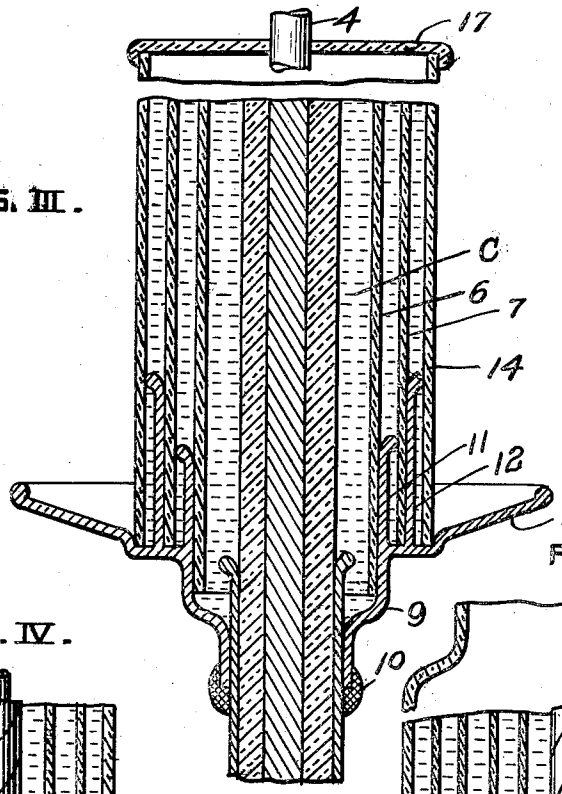

FIG. IV.

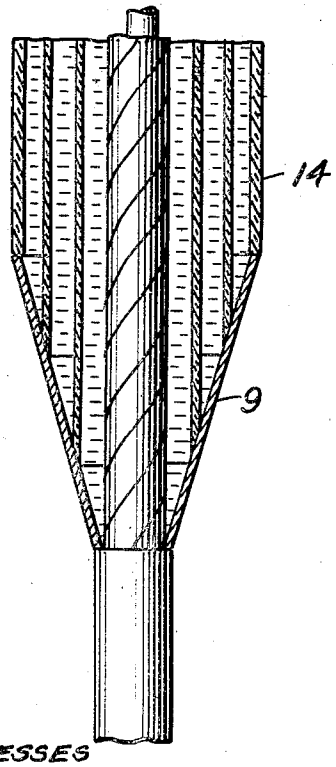

FIG. V.

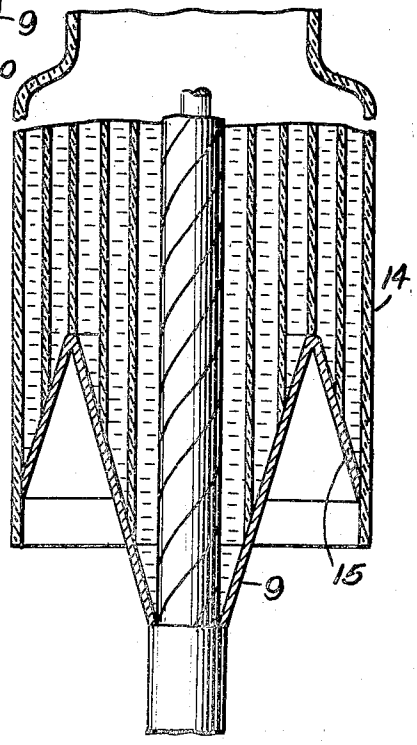

WITNESSES

J. Herbert Bradley

Percy A. English

INVENTOR

Ralph W. Atkinson

by Christy and Christy

his attorneys

Patented Dec. 1, 1925. 1,563,946

UNITED STATES PATENT OFFICE.

RALPH W. ATKINSON, OF PERTH AMBOY, NEW JERSEY, ASSIGNOR TO STANDARD UNDERGROUND CABLE COMPANY, OF PITTSBURGH, PENNSYLVANIA, A CORPORATION OF PENNSYLVANIA.

HIGH-TENSION TERMINAL.

Application filed February 19, 1923. Serial No. 619,795.

To all whom it may concern:

Be it known that I, RALPH W. ATKINSON, residing at Perth Amboy, in the county of Middlesex and State of New Jersey, a citizen of the United States, have invented or discovered certain new and useful Improvements in High-Tension Terminals, of which improvements the following is a specification.

My invention relates to improvements in that element in electrical installation known as a terminal,—a structure wherein electrical union is made between the conductor of an electrical cable and an aerial wire or other bare conductor.

The invention is illustrated in the accompanying drawings. Fig. I is a view in vertical section of a terminal structure built for experimental work but embodying my invention, and illustrating the invention in somewhat diagrammatic manner. Fig. II is a similar view of the same essential structure, having added to it, certain supplementary structural features of electrical value, as will presently be explained. Figs. III, IV, and V are views in vertical section, illustrating the essential feature of the invention developed in forms and with adaptations for field service.

The cable incased in its lead sheath is indicated at 1; 2 indicates the cable insulation, exposed where the sheath has been cut away; and 3 indicates the cable conductor. 4 is the conductor, between which and the cable conductor electrical union is to be made, as indicated at 5, Fig. I. It is this union, and the proximate parts of the cable and conductor which are enclosed and protected by the terminal structure.

Essentially and typically, a terminal structure consists of a casing filled with insulation, surrounding and enclosing the joint. The insulating material contained within the casing and immediately enveloping the joint is ordinarily a heavy liquid, or a substance having the slow fluidity of pitch.

When dealing with high voltages a weak point appears in the typical terminal structure; there is danger of electro-static discharge between cable conductor and cable sheath, over the surface of the unsheathed expanse of cable insulation, where the cable insulation proper and the body of insulating substance which fills the terminal meet surface to surface. Referring to Fig. I of the drawings there is danger of break-down between points *a* and *b* longitudinally over the outer surface of insulation 2. The average value of this stress for reasonable terminal dimensions would (if it were uniformly distributed over the interval) be within entirely satisfactory limits, but the stress is far from uniform, and there is a very great concentration in intensity at the point *b*. As the voltage is increased on a cable, this concentration of stress results in discharges beginning at *b* and carried over the surface of the insulation, resulting, at still higher voltages, either in flashover (failure between the points *a* and *b*) or in destruction to the insulation by the discharges and failure by puncture of the insulation between *a* and *b*, and near *b*. My invention is found in a structure in which the concentration of stress is reduced, so that the stress at *b* is no longer dangerously high.

I surround the cable at the point *b*, that is to say, at the end of the cut-away sheath, with a shield of conducting material, coaxially arranged with respect to the cable, encircling the point of maximum stress indicated above, and extending longitudinally of the structure but in its extent receding from the cable structure, in a direction from point *b*, Fig. I, toward point *a*. I unite this shield electrically with the sheath of the cable, and preferably I fill the interval between the surface of the otherwise exposed cable insulation and the inner surface of the shield with such dielectric material as that indicated above. The presence of such a shield so proportioned and arranged accomplishes the end desired; and, when it comes to high-tension service, notably increases the serviceability of the structure, and contributes to the solution of the problem of conveyance of current under high-tension. It becomes possible, for example, to carry electric power at a potential of 110,000 volts, and that as a practical matter, has not hitherto been achieved.

Incidentally, I achieve improvements of the nature and character which presently I shall explain.

I shall describe first my laboratory struc-

ture, shown in Fig. I. A succession of coaxially arranged cylinders of rigid insulating material, 6, 7, 8 (the particular number is not essential) surrounds the joint, from beyond point *b* below to beyond point 5 above. The structure is arranged vertically, as indicated in the drawing. A lower head 9 closes the lower ends of the cylinders, and constitutes with the cylinders a container for such liquid insulation as has been indicated. This lower head 9 of the casing is structurally united with the cable sheath. Metal cylinders 11, 12, 13, are carried by the cylinders 6, 7, 8. These metal cylinders may take the form of foil wrappings upon the outer surfaces of the cylinders of insulation, but of course the structure in this respect may be varied, within the intelligent operations of an electrical engineer. These metal cylinders are in electrical connection with the sheath 1 of the cable, and, to this end the head 9 may be formed of metal, if convenient, and united electrically with cable sheath on the one hand, and with the metal cylinders 11, 12, 13 on the other. These metal cylinders 11, 12, 13 extend from below point *b* upwardly to different lengths; the innermost, 11, is shortest, extending upwardly beyond point *b* a relatively short distance; the succeeding outer cylinders, 12 and 13, are successively longer, extending each further upward, beyond the preceding inner cylinder. The vertically standing structure finally is filled with suitable insulation, ordinarily liquid, at least liquid when introduced, indicated at C.

To give specific dimensions, the structure is about three feet high; the outermost cylinder is 11 inches in diameter, and its wall is one eighth of an inch thick; the cylinders 6 and 7 are respectively seven and nine inches in diameter. The walls of the innermost cylinder are shown to be thicker, and are, specifically one quarter of an inch thick. The upper edges of the metal cylinders 11, 12, 13 are aligned with point *b*, and a surface extending from the circumference in which point *b* lies and subtending the tips of the sleeves, is a conical surface and extends at an angle of 20°–30° to the axial line of the cable. I do not intend to limit myself to these dimensions; I give them by way of example, merely.

Fig. II shows identically the structure of Fig. I, already described, with this added feature: The upper end of the outermost metallic layer 13 is overlain with an insulating covering, conveniently a wrapping 14 of varnished cloth. This layer of insulation extends for an appreciable distance from the upper end of cylinder 13 downward. Upon this insulating layer is applied another sleeve of conducting material, conveniently a layer 15 of foil, and this layer of foil is in electrical continuity with the otherwise uncovered lower portion of sleeve 13,—that is to say, with the cable sheath 1. The foil layer 15 in turn is covered entirely with an envelope of insulation, conveniently a wrapping 16 of varnished cloth.

It will be particularly remarked that the upper edge of cylinder 15 is more remote from the upper end of the structure as a whole, than is the upper edge of the otherwise exposed outermost conducting cylinder 13. There is at the upper edge of cylinder 13 (Fig. I) a concentration of stress, similar to that which, but for the terminal structure, would occur at *b*. This concentration of stress is less in amount than that which would occur at *b*, but still may be of sufficient magnitude to require special attention. The enveloping of the upper portion of the outermost cylinder 13 with insulation and then the laying on of the cylinder 15 properly insulated, connected below with the sheath but more remote at its upper edge from the lead 4, has the effect of diminishing this concentration of stress and thus of diminishing the danger of breakdown externally of the terminal. In short, by providing such a structure as cylinder 15, connected and insulated as explained, the initial idea of a widening screen, afforded by the successive cylinders 11, 12, 13, may be carried to the extent otherwise most desirable, and then any appreciable danger of discharge over the outer surface of the terminal may be guarded against by the provision of such a structure as the cylinder 15, proportioned, connected and insulated as described.

Turning from the laboratory structure of Figs. I and II, to the service structure of Fig. III, these features only need be noted, in order to gain full understanding: (1) the head 9 of Fig. I and the metal cylinders 11, 12, 13, are here modified, so far as concerns manufacturing operations, and in Fig. III reappear as a metallic bell 9 with upstanding flanges 11, 12, adapted to be united to the cable sheath in familiar manner, as indicated at 10, and adapted to receive and carry the cylinders 6, 7. (2) Intended for continued use, the insulating envelope 14 of Fig. II, here reappears as a porcelain cylinder, similarly designated 14. If for outdoor service, this outermost porcelain cylinder 14 may be superficially petticoated in well-known manner, to prevent leakage. (3) Referring again to Fig. I, for testing purposes no closure of the structure above is needed, and none is shown. But it is manifest that for continued service the structure should be capped over, and, accordingly it will be understood that with the structure of Fig. III, an upper cap or head will be provided, covering cylinder 14 above, and united upon the edge of cylinder 14, and

through this cap or head the aerial lead 4 will be centrally introduced. The penetration of the aerial through this cap will be a tight joint, and similarly the union of the cap upon cylinder 14 will be tight. Since the expanse of cylinder 14 separates this cap from the bell 9, the cap itself may be formed of any desired material, even metal. Such a cap is indicated at 17. (4) The cylinder 15 of Fig. II here reappears, modified in shape; it here consists of a sheet-metal static shield. This shield 15 is a modified arrangement for accomplishing the prevention of undesired electrostatic discharge over the surface of the terminal. It will be understood, in view of what already has been said in connection with Fig. II, that this static shield might lack the flaring feature shown and closely overlie the base of cylinder 14 and extend upwardly to greater or less degree, as found advantageous.

It will be apparent that, electrically considered, these concentric cylinders 11, 12, 13 of metal, of graded length successively from the innermost outward, are in their conjoint effect merely a stepped flaring screen, flaring on the 20°–30° surface from edge *b* already alluded to, Fig. I, and in Fig. IV I indicate a flaring screen in which the steps which characterize the structure of Figs. I–III have been infinitely multiplied, that is to say the stepped feature has been eliminated and in place is the continuously flaring conical screen 9. Otherwise, the structure is essentially that of Figs. I–III, and requires no further particular description. The extension 15 of Fig. III is not present, and manifestly it need not be. The figure is diagrammatic, and particularly so in the mounting of the outer porcelain cylinder 14 upon the screen 9.

Fig. V shows the structure of Fig. IV with the feature which distinguishes Fig. II from Fig. I. Already I have explained how the flaring cone-shaped screen 9 of Fig. IV is electrically the equivalent of the stepped cylinders 11, 12, 13 of Fig. I. The reversely flared cone-shaped shield 15 of Fig. V, made of metal and electrically continuous with shield 9 is similarly the electrical equivalent of, and achieves the described functions of the cylinder 15 of Fig. II.

With the particular construction of Fig. V in view, it manifestly becomes possible to cause the outermost cylinder which as has been indicated will ordinarily be a weather-tight casing of porcelain, to extend at its lower edge beyond the lower edge of the screen 15, and so afford the well-known effect of a petticoat.

Again, it should be remarked in connection with Fig. V also, that it is diagrammatic, particularly in the structure of shield 15, its union with shield 9, and with cylinder 14.

The primary problem with which my invention deals is the relieving of the longitudinal stresses which already I have indicated, the stresses existing between points *a* and *b* (Fig. I) when the cable is in service, and concentrated, but for my invention, at the point *b*. Secondarily, and related to the first problem, is the problem of taking care of radial stresses in the insulating compound with which the terminal structure is filled. This compound, as already I have indicated, is ordinarily a massive liquid, or at least a substance capable of being applied in liquid condition. The structure I have described, including concentrically arranged cylinders of rigid material submerged in the filling substance, reenforces the dielectric properties of the whole, and strengthens the whole, to resist to far greater, and to a practically sufficient degree, all tendency to breakdown and penetration by electrostatic discharge. The cylinders 6, 7, 8 are barriers to electrostatic discharge. A third problem is the elimination of the danger of superficial discharge over the outer surface of the terminal. It is overcome and corrected by the provision of the device 15 in its various modifications and arrangements sufficiently described.

I claim as my invention:

1. A terminal structure for an electrical cable including at one end a screen of conducting material surrounding the cable end, electrically united with the cable sheath, and flaring from the sheath longitudinally of the cable and in direction toward the exposed end, a second shield of conducting material electrically united with the cable sheath and arranged peripherally of the screen first named and terminating at a point more remote from the exposed end of the conductor than the first screen, and a casing of insulating material.

2. A terminal structure for an electrical cable consisting of a screen of conducting material surrounding the cable end, and electrically united with the cable sheath, and flaring from the sheath longitudinally of the cable and in direction toward its exposed end, a plurality of cylinders of rigid insulating material of different diameter, concentrically surrounding the cable end and contacting with said screen, and a body of insulation filling the spaces between the said cylinders in the assembled structure.

3. A terminal structure for an electrical cable including a plurality of cylinders of conducting material, unequal in diameter, coaxially surrounding the cut-away end of the sheath of a cable, all of said cylinders united electrically with the cable sheath but otherwise insulated one from another, and each outer cylinder extending further toward the bared end of the cable conductor than the next inner cylinder.

4. A terminal structure for an electrical cable including a metallic bell provided with a plurality of concentric flanges of graded length.

5. A terminal structure for an electrical cable including at one end a screen of conducting material surrounding the cable end, electrically united with the cable sheath and flaring from the sheath toward the exposed end of the conductor, a second shield also electrically united with the cable sheath surrounding the screen first named and flaring to a wider periphery, and a casing of insulating material.

In testimony whereof I have hereunto set my hand.

RALPH W. ATKINSON.