United States Patent [19]

Tutton

[11] **Des. 269,013**

[45] ** **May 17, 1983**

[54] **IMPELLER WHEEL FOR AN ABRASIVE BLASTING MACHINE**

[75] Inventor: **William G. G. Tutton**, Belper, England

[73] Assignee: **Auto Alloys R & D Limited**, Derbyshire, England

[**] Term: **14 Years**

[21] Appl. No.: **149,551**

[22] Filed: **May 13, 1980**

[30] **Foreign Application Priority Data**

Nov. 13, 1979 [GB] United Kingdom 7992341

[51] **Int. Cl.** ..... **D15—09**

[52] **U.S. Cl.** **D15/126**

[58] **Field of Search** D15/124–126, D15/138, 139; 51/434, 435

[56] **References Cited**

U.S. PATENT DOCUMENTS

3,160,992	12/1964	Moore	51/434
3,401,489	9/1968	Wern	51/434
3,629,975	12/1971	Good	51/434

Primary Examiner—B. J. Bullock

Attorney, Agent, or Firm—C. O. Marshall, Jr.

[57] **CLAIM**

The ornamental design for an impeller wheel for an abrasive blasting machine, as shown and described.

DESCRIPTION

FIG. **1** is a top plan view of an impeller wheel for an abrasive blasting machine showing my new design;

FIG. **2** is a side elevational view thereof;

FIG. **3** is a sectional view taken in the direction of the arrows on line **3**—**3** of FIG. **1**;

FIG. **4** is a bottom plan view thereof;

FIG. **5** is an enlarged fragmentary sectional view taken on line **5**—**5** of FIG. **1**.

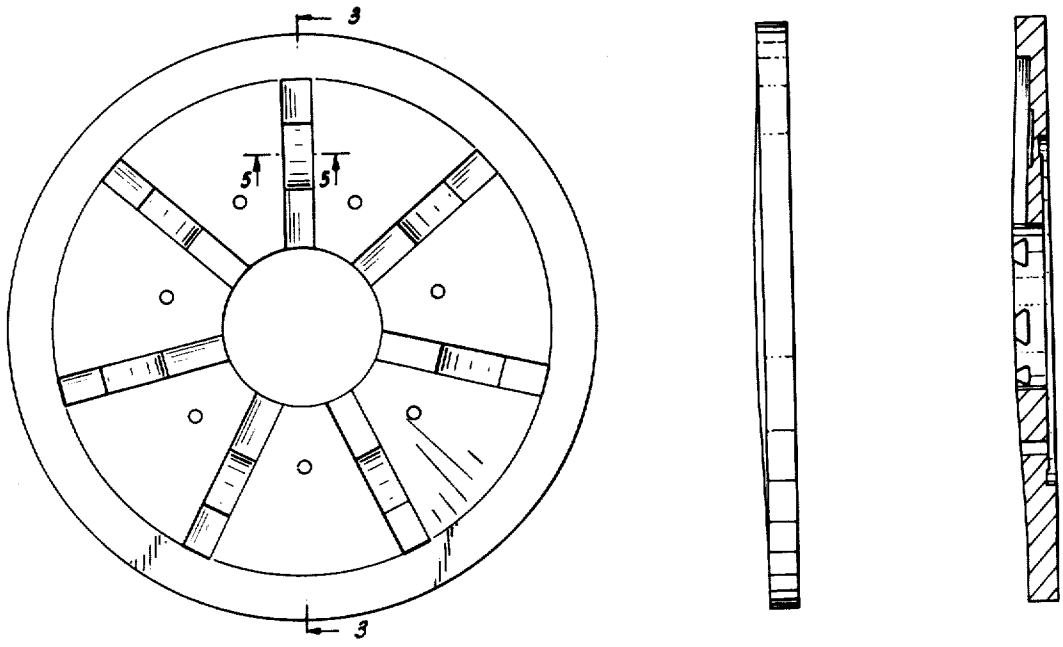

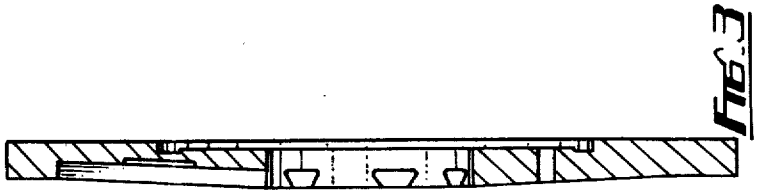

FIG. 3

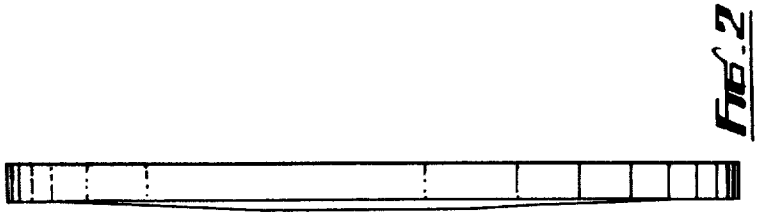

FIG. 2

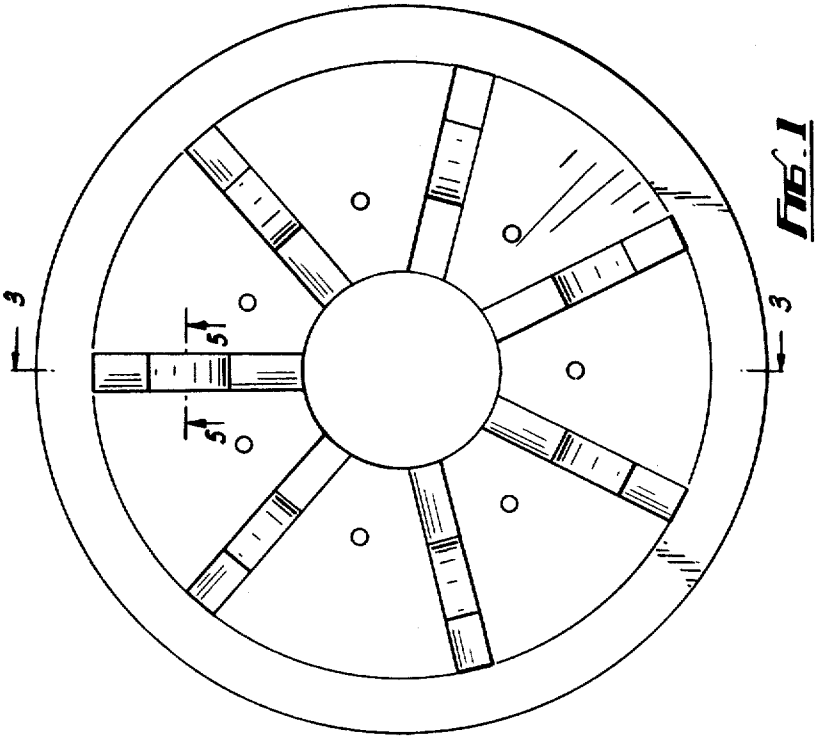

FIG. 1

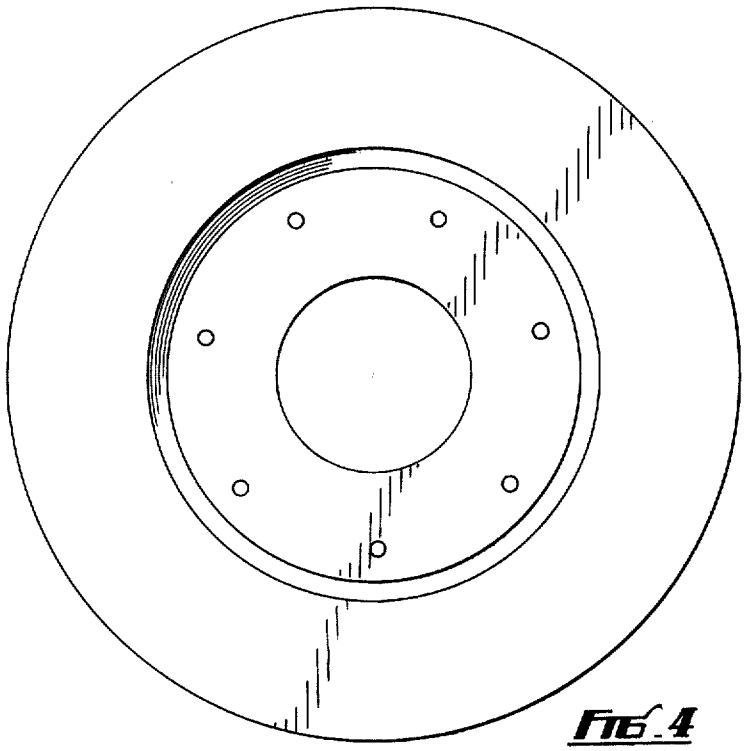

FIG. 4

FIG. 5

