S. BLODGETT.

FOUR WHEEL DRIVE TRACTOR.

APPLICATION FILED MAR. 16, 1921.

1,416,329. Patented May 16, 1922.

Fig. 1

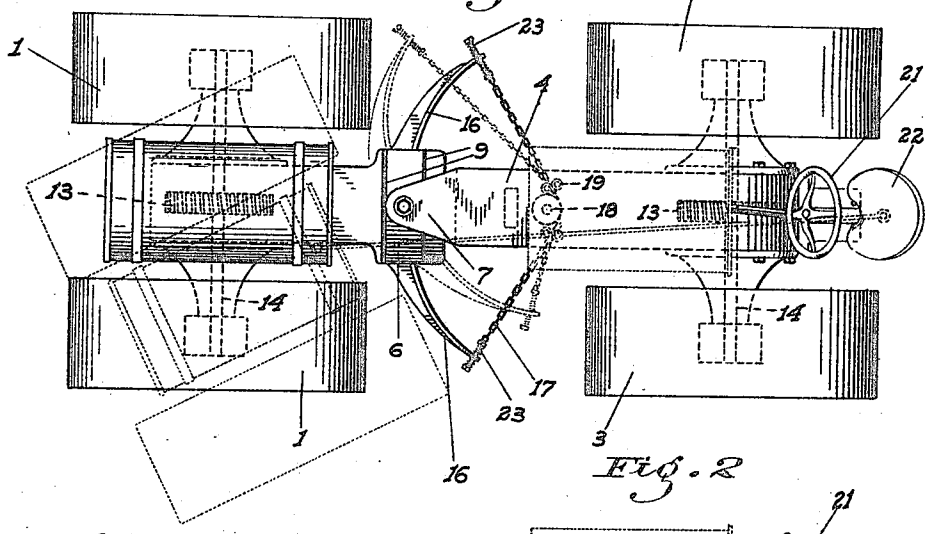

Fig. 2

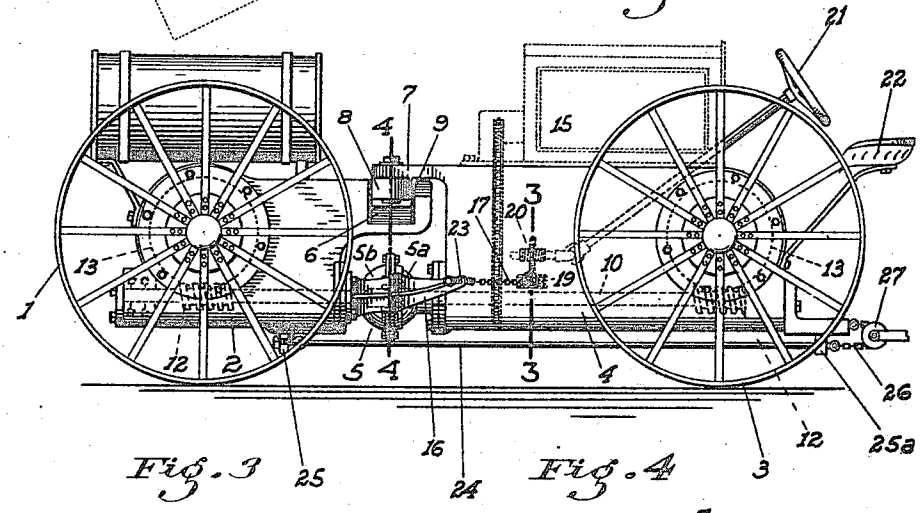

Fig. 3

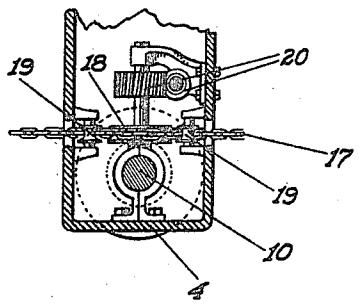

Fig. 4

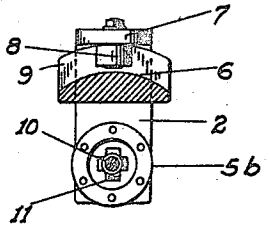

INVENTOR.

Samuel Blodgett

BY Percy W. Webster

ATTORNEY

UNITED STATES PATENT OFFICE.

SAMUEL BLODGETT, OF CLEMENTS, CALIFORNIA.

FOUR-WHEEL DRIVE TRACTOR.

1,416,329. Specification of Letters Patent. Patented May 16, 1922.

Application filed March 16, 1921. Serial No. 452,862.

To all whom it may concern:

Be it known that I, SAMUEL BLODGETT, a citizen of the United States, residing at Clements, county of San Joaquin, State of California, have invented certain new and useful Improvements in Four-Wheel Drive Tractors; and I do declare the following to be a full, clear, and exact description of the same, reference being had to the accompanying drawings, and to the characters of reference marked thereon, which form a part of this application

This invention relates to improvements in tractors and particularly to a type in which all four wheels are driven.

The principal object of the invention is to so construct the tractor and arrange the driving mechanism thereof that the front wheels may be turned to steer the machine in the usual manner, without the necessity of employing duplicate and complex clutch mechanisms such as must be used to steer when all the axles are held rigid.

A further object is to provide a very flexible machine, so that the axles are permitted relative transverse tilting, so that the tractor readily accommodates itself to uneven and rough ground without strain on the frames.

A further object of the invention is to produce a simple and inexpensive device and yet one which will be exceedingly effective for the purposes for which it is designed.

These objects I accomplish by means of such structure and relative arrangement of parts as will fully appear by a perusal of the following specification and claims.

In the drawings similar characters of reference indicate corresponding parts in the several views.

Fig. 1 is a top plan view of the tractor.

Fig. 2 is a side elevation thereof.

Fig. 3 is a fragmentary cross section taken on a line 3—3 of Fig. 2.

Fig. 4 is a cross section taken on a line 4—4 of Fig. 2.

Referring now more particularly to the characters of reference on the drawings, the numeral 1 denotes the front wheels supporting a forward frame unit 2 and 3 the rear wheels supporting the rear frame unit 4, the rear frame being preferably the larger of the two in order to carry the power plant etc. thereon.

The adjacent ends of the frames, especially near the bottom thereof, are spaced apart for the interposition of a substantial and hollow ball-and-socket joint 5, the male member 5^a of which is preferably on the rear frame and the outer or female member 5^b is on the front unit. The upper portion of the frame 2 overhangs the socket joint below, such overhanging portion being provided with a transverse groove 6 whose horizontally disposed surface is radial from the axis of the joint 5.

The frame 4 has a lug or arm 7 overhanging this groove and has a roller 8 mounted thereto which rides in said groove the roller being central with the vertical axis of the joint 5, the sides of the groove being preferably provided with removable shims or liners 9 so as to allow for replacement when wear occurs tending to loose play, which is to be avoided.

Power to rotate the wheels in unison is had by means of a shaft 10 journaled in the frames, the latter being preferably hollow bodies, which shaft passes through the joint 5 and has interposed therein a universal joint 11 of any desired type, and positioned axially or centrally of said joints 5.

Worms 12 on the shaft engage gears 13 which impart rotation to the wheel axles 14, a form of differential such as is commonly employed in automobiles being mounted in connection with such axles and gears. If found desirable however, bevel gear drives may be installed in place of the worm drives.

The shaft 10 is driven from a power plant 15 preferably mounted on the rear frame 4 and positioned so as to throw as much of the weight as possible onto the wheels rather than on the ball joint and roller.

Steering is effected by means of arms 16 extending outwardly and horizontally from the female joint member 5^b, from the outer ends of which arms a chain 17 or similar flexible member extends around a sprocket or drum 18 disposed in the frame 4 horizontally and just above the shaft 10, there being suitable guide rollers 19 for said chain on each side of said sprocket.

Turning of the sprocket at will is effected by means of a worm or other gear mechanism 20 actuated from a steering wheel 21 positioned within reach of the driver on his seat 22 at the rear end of the tractor, the additional weight thus gained at this end

serving still further to take undue weight and strain off the connecting joint 5.

To prevent strains on the steering mechanism with a sudden twist of the wheels, equalizing springs 23 are interposed in the chain 18 between the arms 16 and the chain-ends.

A drawbar 24 is flexibly connected to the frame 2 ahead of and under the same, by means of a bracket 25 fixed to said frame but adjustable lengthwise thereof. The rear end of said drawbar extends through a guide 25^a at the rear end of the frame 4, and is then connected to a chain 26 which in turn is secured to the frame 4. A sheave 27 rides on the chain, this sheave being the member to be actually connected to the load.

In this manner the pulling strain is divided equally between the front and rear frames, and the arrangement as a whole aids in holding the front end of the tractor to the ground, and relieves the strain on the joint 5.

Of course if found desirable, the drawbar-rod 24 may be a chain or flexible cable in common with the member 26.

It will therefore be seen that the front end of the tractor may be swivelled about the joint 5 and roller 8 as a common axis to steer the machine, without disturbing the driving of the front wheels. At the same time the front end may also rock laterally about the joint 5 as an axis, when uneven ground is encountered, without interfering with either the steering or driving, since any extra tension on either side of the steering chain at such time, due to the relative altering of vertical alinement between the sprocket and the ends of the arms, and the consequent altering of the distance therebetween, is taken care of by the springs 23, which however are strong enough not to give under ordinary conditions of steering.

From the foregoing description it will be readily seen that I have produced such a device as substantially fulfills the objects of the invention as set forth herein.

While this specification sets forth in detail the present and preferred construction of the device, still in practice such deviations from such detail may be resorted to as do not form a departure from the spirit of the invention, as defined by the appended claims.

Having thus described my invention, what I claim as new and useful and desire to secure by Letters Patent is:

1. In a tractor, independent front and rear frames, a universal joint connecting the frames, and additional connecting means between the frames in vertical and axial alinement with said universal joint, whereby the frames may have relative horizontal and transverse angular movement.

2. A tractor comprising front and rear pairs of wheels, an independent frame supported by each pair, a hollow ball and socket joint connection between the frames, a common drive shaft passing axially through said joint and operatively connected to all the wheels, and a universal joint interposed in said shaft, the axes of said universal joint being axial with the ball joint.

3. A tractor comprising front and rear pairs of wheels, an independent frame supported by each pair, a universal swivel joint connection between the frames, a roller mounted on one of said frames in vertical alinement with said joint, the other frame being provided with a transverse groove in which said roller rides.

4. A tractor comprising front and rear pairs of wheels, an independent frame supported by each pair, a universal swivel joint connection between the frames, arms projecting horizontally from one member of said joint, a sprocket wheel in the frame opposite to that on which said joint member is mounted, and a common chain attached to the outer ends of the arms and passing around said sprocket, the latter being arranged to be manually rotated.

5. A tractor comprising front and rear pairs of wheels, an independent frame supported by each pair, a universal swivel joint connection between the frames, arms projecting horizontally from one member of said joint, a sprocket wheel in the frame opposite to that on which said joint member is mounted, a common chain attached to the arms and passing around the sprocket, guide rollers for said chain on each side of the sprocket, and springs interposed in said chain at each end thereof.

In testimony whereof I affix my signature.

SAMUEL BLODGETT.