(No Model.) 2 Sheets—Sheet 1.

J. P. HANSEN.

COMBINED HAY AND STOCK RACK.

No. 590,614. Patented Sept. 28, 1897.

FIG. 1.

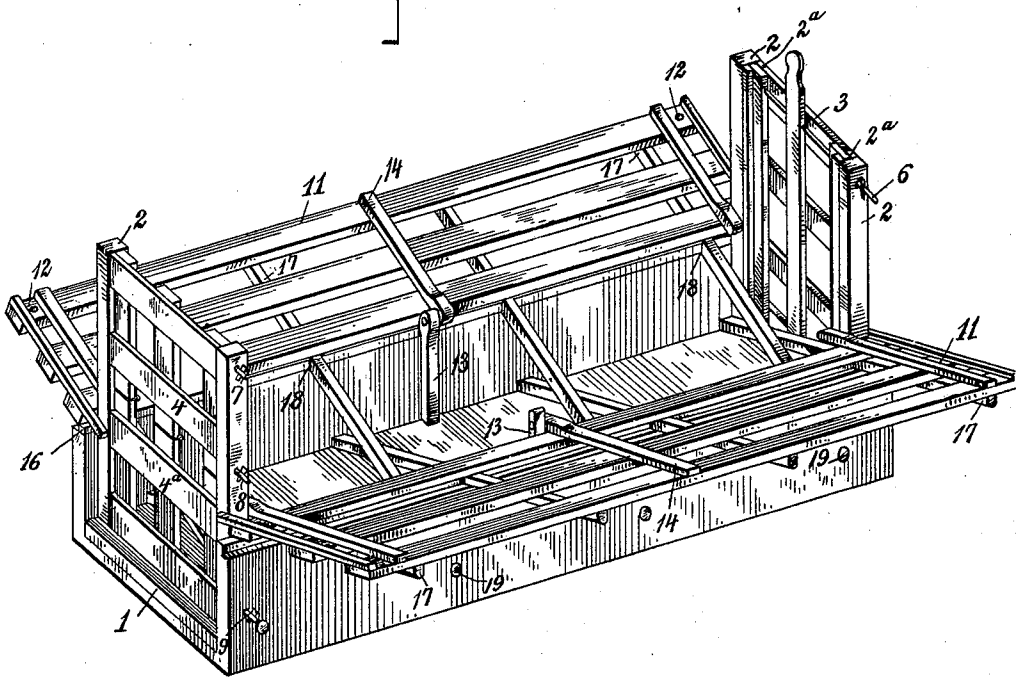

FIG. 2.

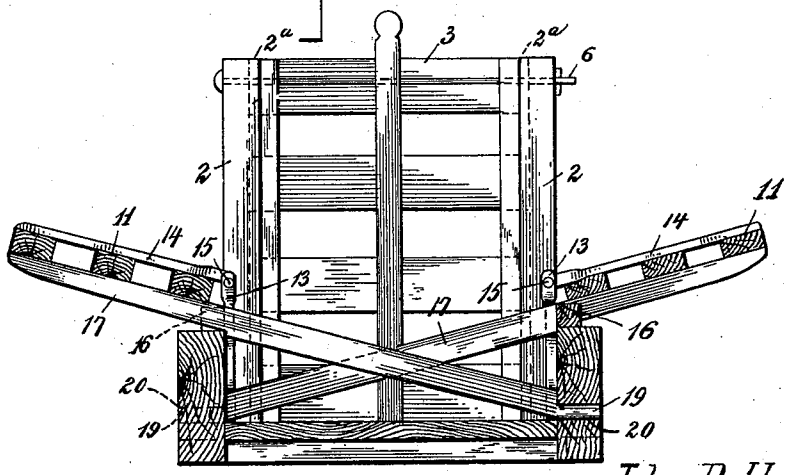

Witnesses

John F. Deufferwiel

J. F. Riley

Inventor

John P. Hansen.

By his Attorneys,

C. A. Snow & Co.

THE NORRIS PETERS CO., PHOTO-LITHO., WASHINGTON, D. C.

(No Model.)

2 Sheets—Sheet 2.

J. P. HANSEN.

COMBINED HAY AND STOCK RACK.

No. 590,614. Patented Sept. 28, 1897.

FIG. 3.

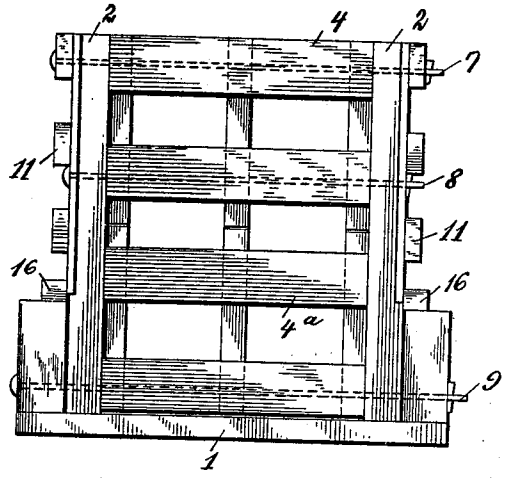

FIG. 4.

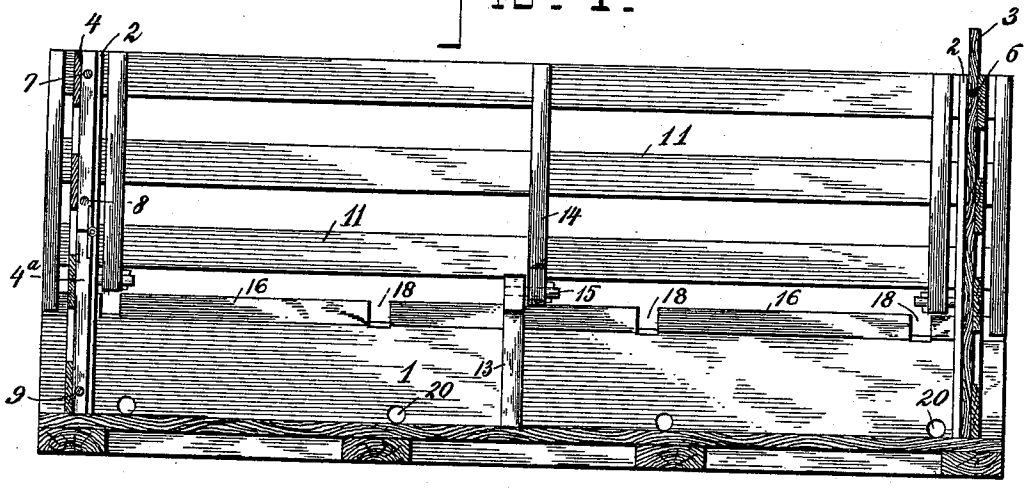

Inventor

John P. Hansen.

Witnesses

John F. Dieffenbach

J. F. Riley

By his Attorneys,

C. A. Snow & Co.

THE NORRIS PETERS CO., PHOTO-LITHO., WASHINGTON, D. C.

UNITED STATES PATENT OFFICE.

JOHN P. HANSEN, OF CEDAR FALLS, IOWA.

COMBINED HAY AND STOCK RACK.

SPECIFICATION forming part of Letters Patent No. 590,614, dated September 28, 1897.

Application filed March 27, 1897. Serial No. 629,535. (No model.)

To all whom it may concern:

Be it known that I, JOHN P. HANSEN, a citizen of the United States, residing at Cedar Falls, in the county of Black Hawk and State of Iowa, have invented a new and useful Combined Hay and Stock Rack, of which the following is a specification.

The invention relates to improvements in a combined hay and stock rack.

The object of the present invention is to improve the construction of a combined hay and stock rack and to provide a simple and comparatively inexpensive one which may be readily converted into either a hay or stock rack and which may be employed for hauling other loads without necessitating the removal of the body of the rack from the running-gear.

The invention consists in the construction and novel combination and arrangement of parts, as hereinafter fully described, illustrated in the drawings, and pointed out in the claims hereto appended.

In the drawings, Figure 1 is a perspective view of a combined hay and stock rack constructed in accordance with this invention and shown arranged as a hay-rack. Fig. 2 is a transverse sectional view of the same. Fig. 3 is an end elevation, the parts being arranged to form a stock-rack. Fig. 4 is a longitudinal sectional view of the same.

Like numerals of reference designate corresponding parts in the several figures of the drawings.

1 designates a bed or box designed to be mounted on a running-gear similar to any ordinary wagon bed or box, and it consists of a bottom, sides, and ends and is provided at its corners with vertical standards 2, between which front and rear end gates 3 and 4 are mounted.

The front end gate is mounted between cleats 2^a of the front vertical standards 2 and is secured in place by a removable rod 6, and it is adapted to be elevated in the said ways when the parts are arranged to form a hay-rack.

The rear end gate, which is composed of upper and lower sections, is secured to the rear standards 2 by horizontal rods 7, 8, and 9. The lower section 4^a is connected by hinges with the upper section, and it is adapted, when the lower rod is removed, to be swung upward to provide an opening through which hogs may pass when the parts are arranged to form a stock-rack. The intermediate rod 8 is arranged adjacent to the hinges of the sections and is located above the same, and the rear end gate by removing all of the rods may be detached when desired.

At opposite sides of the body or box 1 are mounted rack sides 11, hinged to the same at points above the upper edges of the sides thereof and adapted to be readily arranged in an inclined position, as illustrated in Figs. 1 and 2 of the accompanying drawings, to form a hay-rack and capable of being quickly swung upward to a vertical position to form a stock-rack, and these hinged sides 11 are secured in a vertical position by the upper rods of the end gates, which pass through perforations 12 of the sides 11.

The hinges of the rack sides preferably consist of bars 13 and 14, secured, respectively, to the inner faces of the sides of the body or box 1 and to the upper or inner faces of the rack sides. The bars 13 are provided at their upper ends with horizontal pintles 15, which pass through perforations of the bars 14, and the latter are secured on the pintles by means of suitable fastening devices. The ends of the hinged sides 11 of the rack are preferably hinged to the vertical standards 2 of the body or box 1. The body or box is provided at its upper edges, at opposite sides thereof, with strips 16 to extend the sides of the hay-rack sides when the latter are inclined.

The hinged sides 11 of the hay-rack are supported in their inclined position by removable oppositely-inclined transverse braces 17, extending from both sides of the body, at the upper edges thereof. These braces 17, which are arranged in recesses 18 of the sides of the body or box 1, extend entirely across the rack sides and bear directly against the lower faces of the longitudinal slats or bars and have their inner or lower ends reduced to form tenons 19, which fit in openings or sockets 20 of the sides of the box or body 1.

When the parts are arranged to form a stock-rack, the inclined braces are removed to clear the interior of the body or box 1, and

the sides and end gates can also be taken off when it is desired to use the body or box for hauling manure, fodder, or any other load.

It will be seen that the combined hay and stock rack is simple and comparatively inexpensive in construction, that the parts may be quickly arranged to form either a hay or stock rack, and that the body or box of the same may be employed as a wagon body or box and does not have to be removed from a running-gear when it is desired to employ the same for hauling loads other than hay or stock.

What is claimed is—

1. In a combined hay and stock rack, the combination of a box or body, the rack sides permanently hinged to the sides of the box or body at points above the upper edges thereof and adapted to be arranged in a vertical or in an inclined position, and the oppositely-inclined transversely-disposed detachable braces crossing each other at the center of the box or body and resting against the upper edges of the sides thereof and having their lower ends interlocked with the opposite sides of the same at the bottom thereof, said braces being constructed separate from the rack sides and extending entirely across the same at the lower face thereof to form a continuous bearing or support, substantially as described.

2. In a combined hay and stock rack, the combination with a box or body provided at its corners with standards, the hinged rack sides adapted to be arranged in a vertical or an inclined position, and means for supporting the same in such positions, of the front and rear end gates arranged between the standards, one of the end gates being composed of two sections hinged together and arranged one above the other, the lower section being adapted to swing upward to provide a passage for stock, said end gates being secured to the standards by the means employed for securing the rack sides in a vertical position, substantially as described.

In testimony that I claim the foregoing as my own I have hereto affixed my signature in the presence of two witnesses.

JOHN P. HANSEN.

Witnesses:

HANS P. ANDERSEN,

PETER HANSEN.