Sept. 22, 1931. J. A. LETHERT 1,824,161

BADGE

Filed Sept. 22, 1930

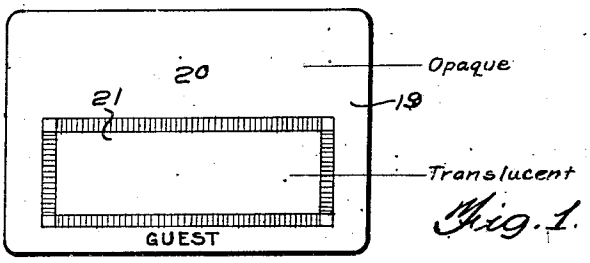

Fig. 1.

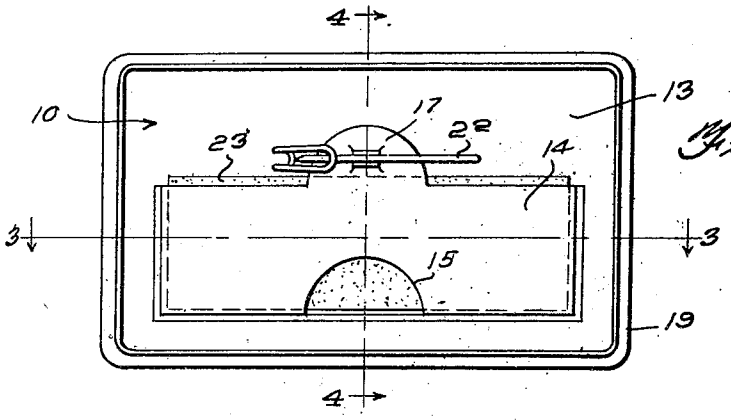

Fig. 2.

Fig. 3.

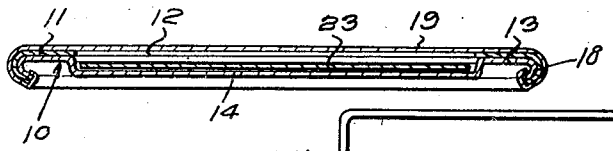

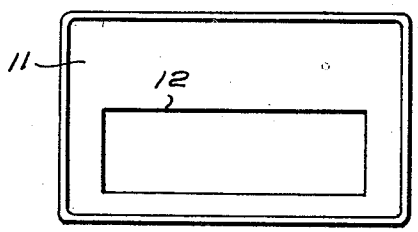

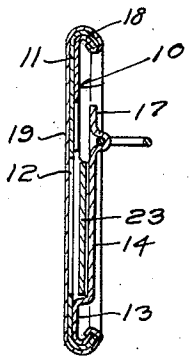

Fig. 4.

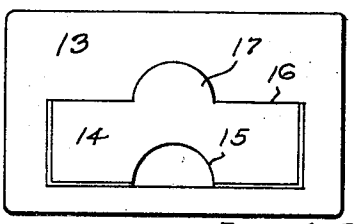

Fig. 5.

INVENTOR.
John A. Lethert,
BY B. P. Fishburne
ATTORNEY.

Patented Sept. 22, 1931

1,824,161

UNITED STATES PATENT OFFICE

JOHN A. LETHERT, OF ST. PAUL, MINNESOTA

BADGE

Application filed September 22, 1930. Serial No. 483,673.

My invention relates to improvements in badges.

In accordance with my invention, I provide a badge which may be used for the purpose of conveying identification, description, or other information. The badge may be worn by an individual or may be attached to an animal, package, or other object. The badge may be made in various shapes and sizes, as may be advantageous. The badge embodies a body portion, preferably formed of front and rear metal plates. These plates are preferably formed of metal. The front plate has a window or opening formed therein, while the rear plate has a pocket stamped therefrom, to receive the card or display element. The pocket is preferably provided with a tab, which may be used in opening the pocket, to a certain extent, and this tab preferably carries the attaching element to secure the badge in place. The attaching element also serves as a grip, whereby the tab may be moved rearwardly. The front plate is preferably covered by a celluloid sheet, having a transparent window and a translucent portion surrounding the window. The face of the badge may be provided with suitable designations. The face of the badge is adapted to be kept clean by washing or the like. The badge is simple in construction, cheap to manufacture and convenient in use.

In the accompanying drawings, forming a part of this specification, and in which like numerals are employed to designate like parts throughout the same,

Figure 1 is a front elevation of a badge embodying my invention,

Figure 2 is a rear elevation of the same,

Figure 3 is a horizontal section taken on line 3—3 of Figure 2,

Figure 4 is a transverse section taken on line 4—4 of Figure 2, and,

Figure 5 is an elevation of the front and rear plates.

In the drawings, wherein for the purpose of illustration, is shown a preferred embodiment of my invention, the badge embodies a body portion 10, shown as rectangular, for the purpose of illustration, although the same may be in any suitable shape or size. This body portion includes a front plate 11, preferably formed of metal, having a window or opening 12, formed therein. The numeral 13 designates a rear companion plate, corresponding in shape and size to the front plate 11, and adapted to be assembled with the same. This rear plate has a rearwardly bulging recess or pocket 14 stamped therefrom, which is closed at its ends and bottom except for a finger or thumb opening 15, disposed at the bottom of the pocket, at a point equidistantly spaced from the ends thereof. The rear plate 13 is slit at the line 16, providing the open top end of the pocket and a tab 17 carried by the pocket in alinement with the opening 15. The front and rear plates 11 and 13 are assembled in close contacting relation and their marginal edges are bent or spun rearwardly into a bead 18, serving to securely unite the same. The front plate 11 is covered by a sheet of celluloid 19, or the like, the marginal edges of which are spun or bent with the marginal edges of the front and rear plates, into the bead 18, whereby the celluloid sheet is securely attached to the front plate. The celluloid sheet or covering has an opaque portion 20, and a transparent window 21, to register with the window 12. The opaque portion of the celluloid sheet may carry any suitable designation.

An attaching element, preferably in the form of a safety pin 22 is arranged at the rear of the tab 17 and is soldered or otherwise rigidly attached thereto. This safety pin projects rearwardly from the tab 17, and serves as a grip for the convenient opening movement of the tab and the pocket 14, within limits, when a card or display element 23 is being inserted within the pocket.

In the use of the badge, when it is desired to insert a card or display element 23 within the pocket, the safety pin 22 may be engaged by the fingers and moved rearwardly, thereby slightly opening the tab 17 and the top of the pocket 14, thus rendering it more convenient to insert the display element into the pocket. Should it be necessary to adjust the display element within the pocket, such adjustment may be made by inserting the finger or thumb through the

opening 15. The attaching element or safety pin may be secured to the lapel of the coat or to any other object. The badge may be made in various shapes and sizes and may be used for all purposes for which a badge or tag may be used.

It is to be understood that the form of my invention, herewith shown and described, is to be taken as a preferred example of the same, and that various changes in the shape, size and arrangement of parts may be resorted to, without departing from the spirit of my invention, or the scope of the subjoined claims.

Having thus described my invention, I claim:—

1. A badge comprising a front plate having a window, a rear plate having a rearwardly bulging pocket stamped therefrom to receive a display element, said pocket having its bottom closed and its top open, and provided at its open top with an upwardly projecting tab, and a covering for the front plate having a transparent portion covering the window in the front plate, the marginal edges of the front plate, rear plate, and covering being bent into a rearwardly extending marginal bead which surrounds the pocket and tab, the tab serving to move the upper open end of the pocket rearwardly.

2. A badge comprising a front plate having a window, a rear plate having a rearwardly bulging pocket stamped therefrom to receive a display element, a covering for the front plate having an opaque body portion and a transparent window covering the window in the front plate, and an attaching element connected with the open end of the pocket and adapted to serve as a grip whereby the open end of the pocket may be moved rearwardly.

3. A badge comprising a front plate having a window, a rear plate attached to the front plate at their marginal edges, said rear plate having a rearwardly bulging pocket stamped therefrom which is open at its top, a tab carried by the upper open end of the pocket, and an attaching element secured to the tab and extending rearwardly therefrom, said attaching element also serving as a grip whereby the upper open end of the pocket may be moved rearwardly.

4. A badge comprising a front plate having a window, a rear plate secured to the front plate at their marginal edges, said rear plate having a rearwardly bulging pocket stamped therefrom, said pocket being open at its top and provided at the open top with a tab extending above the same, said pocket being provided at its bottom with a finger receiving opening, and an attaching element secured to the tab.

In testimony whereof I affix my signature.

JOHN A. LETHERT.