Dec. 26, 1967 W. H. NOVALES 3,360,321

KNOCKDOWN LOCKER STRUCTURE

Filed Feb. 1, 1966 4 Sheets-Sheet 1

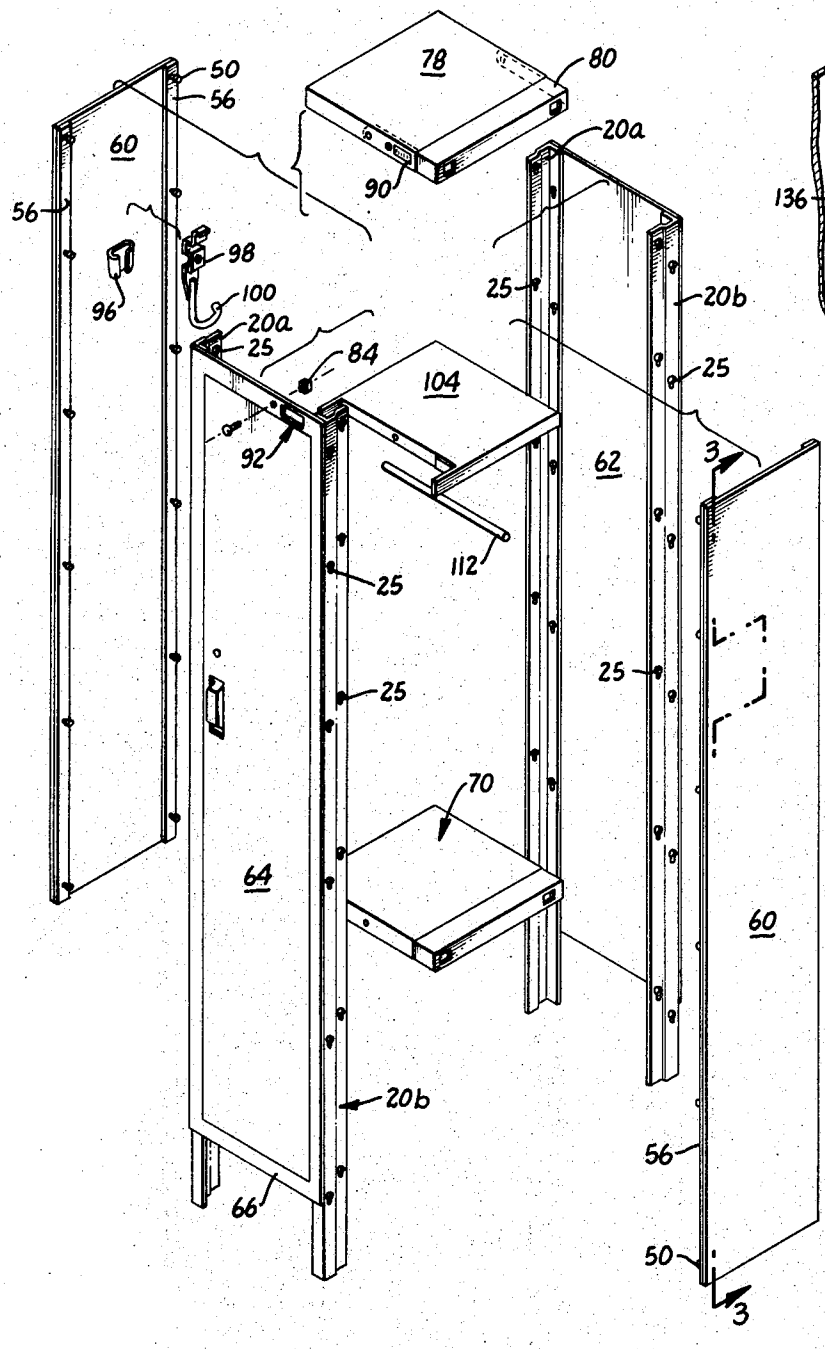

FIG. 1.

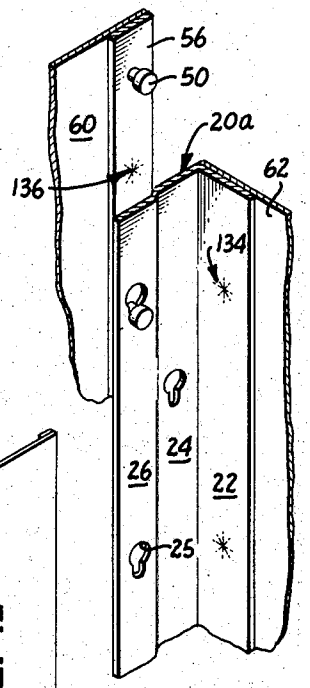

FIG. 2.

INVENTOR.
WILLIAM H. NOVALES
BY Lancaster & Sheck
His ATTORNEYS

Dec. 26, 1967 W. H. NOVALES 3,360,321

KNOCKDOWN LOCKER STRUCTURE

Filed Feb. 1, 1966 4 Sheets-Sheet 2

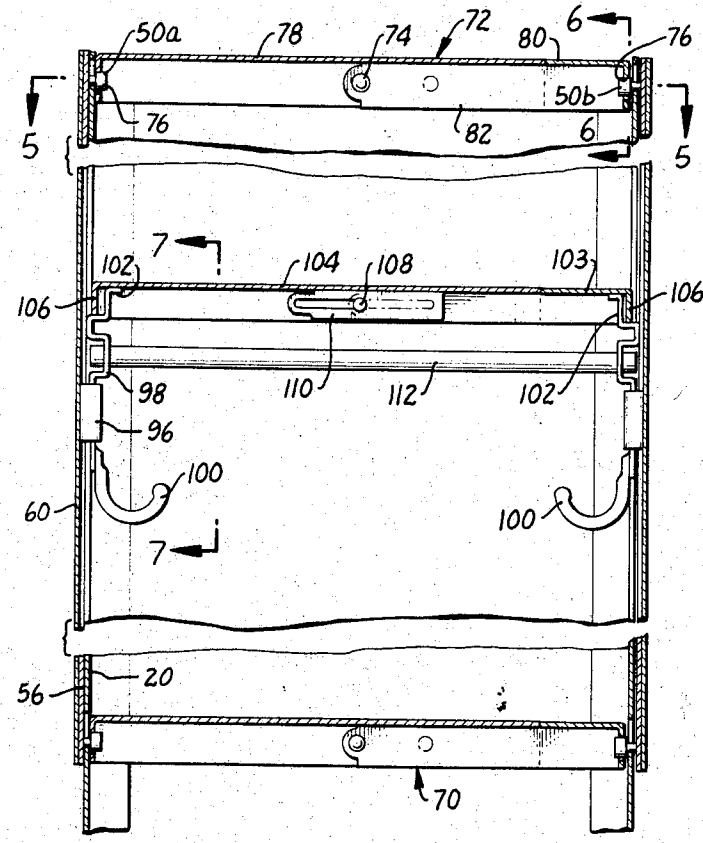

FIG. 3.

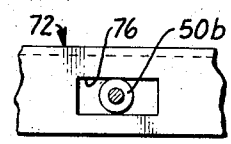

FIG. 6.

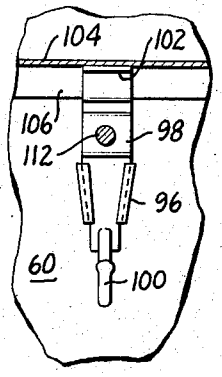

FIG. 7.

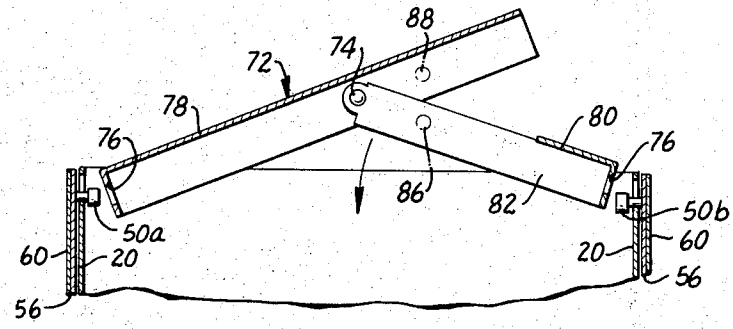

FIG. 4.

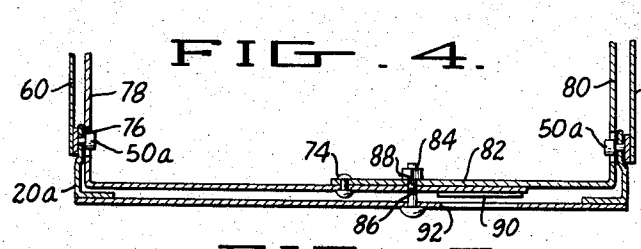

FIG. 5.

INVENTOR.
WILLIAM H. NOVALES
By Eisenhoff & Slein
His ATTORNEYS

Dec. 26, 1967 W. H. NOVALES 3,360,321

KNOCKDOWN LOCKER STRUCTURE

Filed Feb. 1, 1966 4 Sheets-Sheet 3

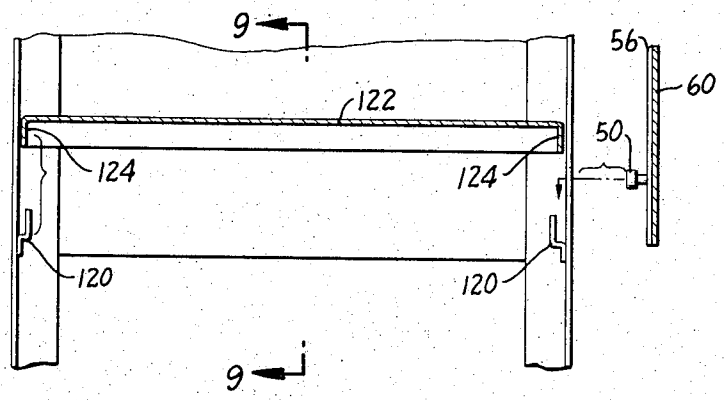

FIG. 8.

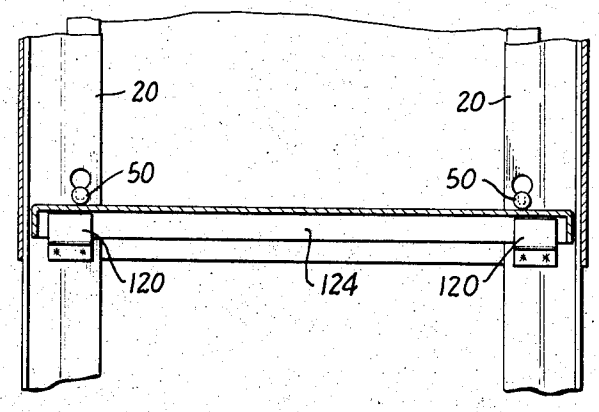

FIG. 9.

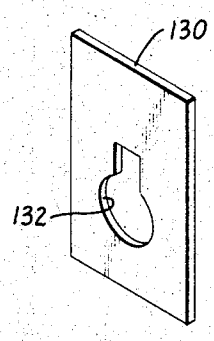

FIG. 10.

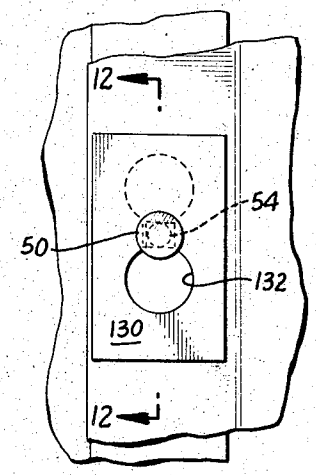

FIG. 11.

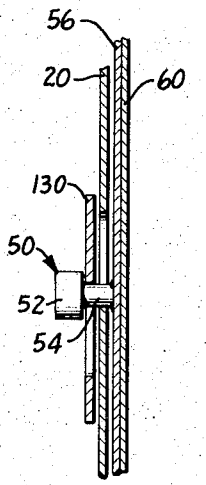

FIG. 12.

INVENTOR.
WILLIAM H. NOVALES
BY Kenyon & Kenyon
ATTORNEYS

Dec. 26, 1967 W. H. NOVALES 3,360,321

KNOCKDOWN LOCKER STRUCTURE

Filed Feb. 1, 1966 4 Sheets-Sheet 4

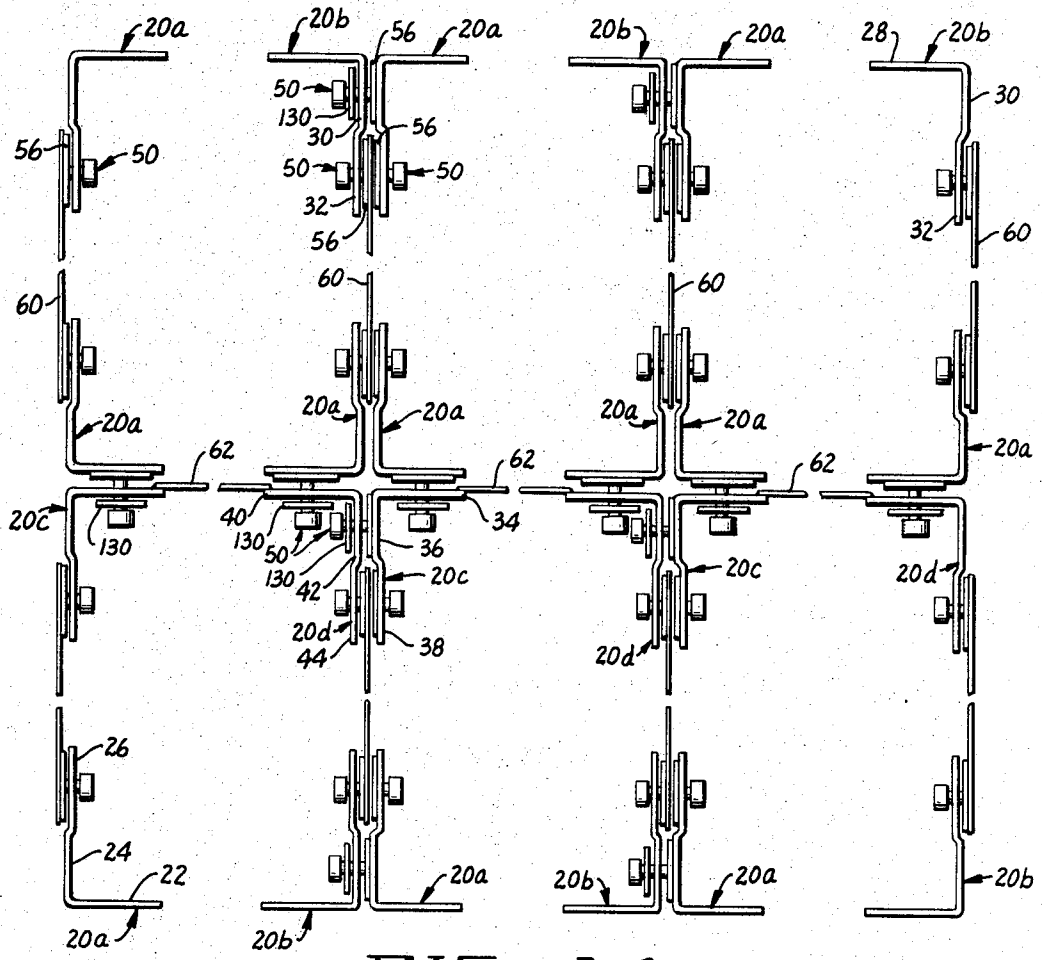

FIG. 14.

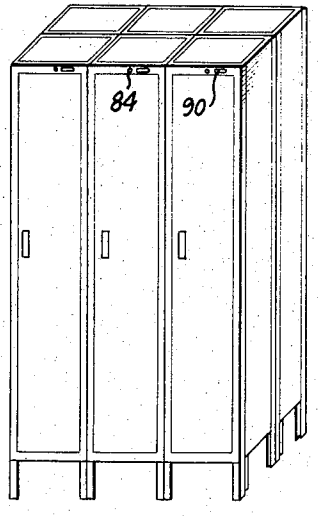

FIG. 13.

INVENTOR.
WILLIAM H. NOVALES
BY Kenyon & Kenyon
His ATTORNEYS

United States Patent Office 3,360,321 Patented Dec. 26, 1967

3,360,321

KNOCKDOWN LOCKER STRUCTURE

William H. Novales, % Novarax Company, P.O. Box 8364, Oakland, Calif. 94608

Filed Feb. 1, 1966, Ser. No. 523,991
7 Claims. (Cl. 312—257)

ABSTRACT OF THE DISCLOSURE

A locker assembly wherein the elements constituting the sides, front and back of the locker are held together by means of studs fitting into key holes on adjoining elements, with a top and/or bottom member which is hinged so that it can be broken into an angle of less than 180 degrees for insertion, then extended to 180 degrees to hold the structure in place and wherein a single bolt is employed on a frame member, said bolt passing through the frame member and into hinged members, said single bolt holding the assembly in place.

This invention relates in general to lockers of the type used in gymnasiums, schools, clubs and more particularly to a novel locker design and method for erection thereof which eliminates the need for virtually all of the bolts customarily employed to hold the various elements together whether for a locker or a number of lockers.

Conventionally, light gauge steel sheets are spot welded or bolted to press-breaked steel angles which together make the locker front. The swinging door, latch, and locking device are welded or bolted onto the locker front. The back of the conventional locker is a sheet of steel of about 24 gauge with the longitudinal edges punched for bolt holes and the edges are formed into flanges at the sides to which other steel sheets having properly punched bolt holes are attached by means of bolts.

The conventional locker of the dimensions 12" by 12" by 60" high having 6" legs, a hat shelf, flat top, two hooks and a tubular rod for hanging clothes requires about forty-five bolts and nuts. Conventionally, these bolts are inserted manually at the job site and even the use of electric "nut-runners" still makes assembling such a locker a costly operation. In northern California, for example, at this time, the customer who has purchased lockers in knock-down form is charged $12.60 per hour, or 21 cents per minute, for the services of a skilled sheet metal worker to erect the lockers. A substantial portion of the time consumed in erecting lockers could be saved if means were available to eliminate most of the nuts and bolts conventionally required.

Any system eliminating the nuts and the bolts must also retain the chief advantages of the conventional system an important one of which is the possibility of utilizing individual sheets of metal as common sides or common backs for lockers which are erected in a row or back-to-back. Efforts in the past to eliminate the multitude of nuts and bolts have not permitted the use of "adder" lockers which take advantage of sides and backs already present and supplied by the "starter" locker.

It is, therefore, an object of this invention to provide a locker structure or system constituting a plurality of lockers arranged in a row and/or back-to-back which permits the elimination of practically all nuts and bolts.

A further object of this invention is to provide a structure of the foregoing type which permits the use of individual sheets of metal as common sides and backs.

Still another object of this invention is to provide a system for erecting lockers in a row or back-to-back with a minimum of operation and utilizing a limited number of relatively large structural elements.

Another object of this invention is to provide a locker

assembly which may be erected on the job and which incorporates, as one of the structural elements, means for insuring that each locker is rigid and the parts snugly fitted together irrespective of the fact that manufacturing economy considerations may dictate that punching, bending, etc., not be to close tolerances.

In the drawings:

FIGURE 1 is an exploded view of the "starter" or first locker of this invention;

FIGURE 2 is an enlarged fragmentary view of one corner of a locker of this invention showing the method for affixing the sides to the back and front of the locker of this invention.

FIGURE 3 is an enlarged, fragmentary section through the line 3—3 of FIGURE 1 showing in detail the top, hat shelf, hooks, bar and bottom plate of the locker of this invention;

FIGURE 4 shows the procedure for inserting horizontal plates (top, bottom or shelf) between the walls of a partially erected locker;

FIGURE 5 is a view through line 5—5 of FIGURE 3 showing how a horizontal plate such as the top shelf may be bolted to the front of the locker;

FIGURE 6 is a fragmentary view through the line 6—6 of FIGURE 3 further showing the manner in which the top and bottom shelves are held in place;

FIGURE 7 is a fragmentary view along the line 7—7 of FIGURE 3;

FIGURE 8 shows an alternate structure for one or more horizontal members;

FIGURE 9 is a view along the line 9—9 of FIGURE 8;

FIGURE 10 is an enlarged view of the locking plate which is an optional feature further insuring against the lockers being disassembled;

FIGURE 11 shows the aforementioned locking plate in position;

FIGURE 12 is a view through the line 12—12 of FIGURE 11;

FIGURE 13 is a reduced scale perspective view showing six lockers assembled side-to-side and back-to-back;

FIGURE 14 is an enlarged fragmentary plan of six of the lockers arranged side-to-side and two rows back-to-back before the tops have been installed and with the front doors and frames eliminated.

Generally, this invention comprises a locker formed of a locker front and door, a pair of side plates, a back plate, a top and a bottom, all of which are held together by means of studs having relatively enlarged heads and relatively narrow shanks, which studs protrude into and through keyholes therefor which are punched in other structural elements. To make the foregoing possible, there is provided a plurality of pieces of light gauge steel angle or extruded aluminum, the angles being punched at given intervals and places, which angles are utilized with a light gauge metal fastening strip which is conveniently of the same length as the aforementioned angles and has studs welded or fastened thereon, each stud being positioned so as to engage a punched hole of an angle. Such fastening strips carrying the studs may be spot welded to various legs of the angles and to the side panels of the lockers to permit the proper assembling of the lockers and to permit the use of common sides and backs when the lockers are erected in a row or back-to-back.

Referring now to the drawings wherein like characters refer to like parts throughout, it is seen that the lockers or cabinets utilize as fundamental construction elements a plurality of generally L-shaped angles, generally designated 20, which are constructed of light gauge steel or extruded aluminum. The angles are punched along various legs at predetermined intervals and the punching is keyholed, rectangular or square, as may be convenient. The

angles are of four different types, as may be seen by studying FIGURE 14 where the angles are shown in plan.

The first type **20***a* has one smooth, unpunched surface **22**, a second smooth surface **24** at right angles thereto and a third punched surface **26** which lies in a slightly different plane from the smooth surface **24**. In FIGURE 1 the punched keyholes **25** are seen, and in FIGURE 14 various studs are shown extending therethrough.

The second type of **20***b* is provided with one smooth leg **28**, a punched leg **30** at right angles thereto and, lying in a slightly different plane, a second punched leg **32**; see FIGURE 14.

The third type of angle **20***c* is provided with a first punched leg **34**, a second smooth leg **36** at right angles thereto and a third punched leg **38** in a plane parallel to leg **36** but offset slightly therefrom.

The fourth type of angle **20***d* has a first punched leg **40**, a second punched leg **42** at right angles thereto and a third punched leg **44** in a plane parallel to the plane of leg **42** but slightly offset therefrom.

A light gauge metal fastening strip **56** (FIGURE 12) (16 or 14 gauge) of about ¾-inch width has a series of studs generally designated **50** welded thereto. Each stud has a relatively large head **52** and a relatively smaller shank **54**. The strips designated **56** are welded to various of the angles **20**, and to the locker side plates **60** in such a manner that the studs will register with the appropriate holes in the angles. The fastening strips are spot welded to various of the shorter or longer legs of the angles and in some cases two of the strips are spot welded to a single angle leg. The side panels which serve as common walls **60** have the fastening strips spot welded to them, and the back walls **62** of the front or lower row of lockers seen in FIGURE 14 are welded to the angles **20***c* and **20***d* to provide a single unit at the time of assembly. Similarly, each locker door **64** and its surrounding framework **66** (FIGURE 1) is spot welded to angles **20***a* and **20***b*.

It is seen that to assemble the sides, backs, etc., it is merely necessary to place the various studs **50** into the larger parts of the keyholes and thereafter drop them down into place as seen in FIGURE 2.

In a structure of this sort, manufacturing tolerances will be such that at this point the locker or group of lockers generally will be relatively unstable. Means are therefore provided for making the structure more rigid.

As shown in FIGURE 3, the locker bottom **70** and top **72** are ultimately positioned to bridge the distance between two of the sides and to be supported by the studs extending therefrom. The top or bottom is first folded about hinge pin **74** and holes **76** permits it to surround and slide over studs **50***a* and **50***b*; see FIGURE 4. The top and bottom members consist of two flanged metal plates **78** and **80**, the latter supported by arms **82**. When the top or bottom (or shelf, if desired) is inserted in the fashion shown in FIGURE 4, and plates **78** and **80** forced into the same horizontal plane, the locker is thereby expanded internally. Pressure is applied against the fastening strips in the area adjacent the studs **50***a* and **50***b*. This controlled internal expansion permits reasonable tolerances in the punching of the holes in the angles and plates.

After 180° with respect to the two surfaces **78** and **80** has been reached, a single bolt and nut combination **84** may be run through the holes **86** and **88** to maintain the top or bottom in a fixed position. However, as seen in FIGURE 5, this bolt **84** may also pass through frame **66** surrounding the door of the locker; see FIGURE 1.

The number or name plate for the locker is conventionally bolted in place with two bolts; but these may be eliminated simply by treating one side of this plate with pressure sensitive adhesive and pressing it against the arm **82**. When the top plate has assumed a 180° orientation, the identification plate lies immediately behind the opening **92** in the door frame (FIGURE 1). This arrangement also permits inserting a personal card instead of a number plate while eliminating two bolts which, in a conventional structure, are so positioned that they may be stripped off readily.

Bolts and nuts are also eliminated from the hook and rod combination which are conventionally included inside lockers of the type described here. A tapered claw-shaped keeper piece **96** is welded to one side of each plate **60** or to either side of each plate **62**. Brackets **98** support hooks **100**. The bracket of this invention has an extended topmost horizontal portion and a flange **102** thereon which lies slightly below the hat shelf level. The hat shelf may then be placed thereover to prevent the hooks from being removed. Each bracket at **98** has a hole drilled therein for receipt of rod **112** which is installed before the hat shelf.

The hat shelf may be similar in structure to the top and bottom plates previously described, but in FIGURE 3 a somewhat modified structure is shown. The shelf consists of top plates **103** and **104** having flanges along the edges and end flanges **106**. The hat shelf portions are hinged about pin **108**. The shelf is forced into a 180° orientation and sliding block **110** is pushed to the left, as seen in FIGURE 3, to prevent the shelf from again being pivoted in the middle. This shelf may conveniently be used in place of the bottom shelf designated **70** in FIGURE 3 so as to eliminate the need for one bolt at the bottom of each locker.

In FIGURES 8 and 9 an alternate bottom shelf is depicted. This is a non-preferred embodiment since it does not apply stress to the interior of the locker. Brackets **120** are spot welded to angles **20** on opposite sides of the interior of the locker and a shelf **122** having suitable flanges **124** is simply slipped into place.

In FIGURES 10–12 an extra precaution is shown for insuring that the lockers cannot be separated and disassembled, as by placing an automobile jack beneath one of the middle lockers and lifting it free of adjacent lockers—moving the studs up into the area of the enlarged portion of the keyhole where they may drop free. In FIGURE 10 there is seen a locking plate **130** having a keyhole **132** of the same general shape as that punched in the angles excepting that it is seen in an orientation 180 degrees rotated from that assumed by the keyholes of the angles.

The locking plate **130** is applied as shown in FIGURES 11, 12 and 14. When the locking plate is in place, even if the end **52** of a stud is brought up into alignment with the enlarged portion of a keyhole, the plate **130** will be still locked in place behind the end **52** of the stud. One of these locking plates at each interior corner is all that is required to assure against the units being disassembled without the front door being opened. Plates **130** may be hidden under the shelves in such a fashion that they may not readily be removed by the user of the locker.

In FIGURE 1 a single "starter" locker is shown which is assembled by securing together various prefabricated portions supplied by the factory. The left wall consists of plate **60** spot welded to each of fastening strips **56** which has studs **50** thereon. The studs are slipped into the keyholes **25** seen facing the side, which keyholes appear in the angles **20***a* which are spot welded to the door frame **66** on the one hand and to the back plate **62** on the other. The near wall **60** also has similar fastening strips **56** along its longitudinal edges and the studs carried thereby are placed into the larger portions of the keyholes **25** in the angles **20***b* welded to the door frame **66** and the back **2**. The side **60** drops into place readily. The keyholes **25** used on each of these fastening strips **20***b* are those shown in the lower left-hand corner of FIGURE 14 which represents the plan view of the locker seen in FIGURE 1. It is assumed that the outset that this particular locker will be positioned at the far left-hand corner of any room in which a series of these lockers will be placed. Thereafter, a number of lockers may be placed at the right-hand side of this "starter" locker and additional "adder" lockers may be placed in the second row, all as seen in FIGURE

14. It is preferred that the angles appearing at the upper right-hand corner and the lower right-hand corner of FIGURE 14 be of the type **20***b* containing two rows of keyhole cutouts so that additional lockers may be added at any time as desired to increase the length of the rows.

The shelf top and bottom are installed after the hooks and rod are in place and finally the locking plates **130** are installed. Where the shelf **104** (FIGURE 3) having a sliding lock **110** is used at the bottom of each locker, only a single bolt **84** is needed to provide rigidity.

It is pointed out earlier, sides **60** are already provided with spot welded strips **56** bearing the studs **50**. Similarly, various of the angles **20***a* and **20***c* have fastening strips bearing studs welded to them as shown in FIGURE 14. In fact, with the exception of the two angles appearing at the far left-hand corner of the starter locker of FIGURE 14 (the locker appearing at the lower left-hand corner of FIGURE 14) and the angle **20***a* appearing at the upper left-hand corner of FIGURE 14, all of the angles **20***a* and **20***c* have fastening strips bearing studs welded thereto. Angles **20***b* and **20***d* do not have fastening strips welded thereto.

In addition to the shelves, hooks, etc., the fundamental building units are, therefore, the angles which may or may not bear fastening strips, the side, back and front plate or frame. The complete six-unit assembly seen in FIGURE 14 contains, excluding top, bottom shelves and any other internal material; six front frames, three back frames, eight side panels and six loose angles. To this is added top, bottom, shelf, hooks, rod, name plate and a single bolt together with approximately ten locking plates, **130** (FIGURE 10).

It will be appreciated that the method of assembly shown provides for the sequential locking of elements. As an example, the locker bottom of FIGURES 8 and 9, which rests inside the locker supported by the brackets welded to the front and back of the locker angles, is locked in place by the sides of the locker when these are installed and the studs of the side-mounted fastening strips are protruding inwardly immediately above the bottom member. The same method of using one part of the locker to lock another member during the assembly process can be seen in the hook and rod assembly where the hat shelf directly above the hook and rod bracket prevent the dislodging of the bracket.

One of the critical elements for the success of this invention is the use of the angle pieces described which are all of the same size and shape, varying only in the treatment of the legs as regards punching and/or application of the fastening strips. Utilizing these in various combinations it is possible to build single lockers, as shown in FIGURE 1, or rows comprising many lockers placed side-to-side and/or rows of lockers erected back-to-back, thereby taking advantage of common sides and backs.

In practice it has been found that this structure can be assembled in about one-fifth the time that it takes to assemble conventional lockers utilizing bolts and nuts. Obviously, many modifications and variations may be made without departing from the spirit and scope of this invention and, therefore, only such limitations should be imposed as are indicated in the appended claims.

I claim:

1. A locker assembly having a plurality of structural elements including a door frame with door hinged thereto, sides, a back, a top and a bottom wherein:

(a) said door frame and said back being attachable to said side members by means of studs having relatively narrow shanks and relatively large heads on one element mating with corresponding keyhole shaped openings on adjacent elements,

(b) at least one of the said top and bottom elements comprising a hinged structure which in its normal position forms an angle of 180 degrees but which can be folded into an angle of less than 180 degrees to permit said element to be inserted in place in said locker assembly,

(c) mating holes in said door frame and one of said hinged structures, and

(d) a single bolt passing through said mating holes, said single bolt being the sole means for bolting said members together, said bolt preventing the folding of said hinged structure.

2. The structure of claim **1** wherein both top and bottom comprise hinged elements normally describing an angle of 180 degrees when in place and which snugly fit within the said locker assembly when in place and which can be folded in the middle thereof to permit easy insertion between the sides of the said locker assembly.

3. The structure of claim **1** wherein there is provided a locking plate having an inverted keyhole punched therein for locking said studs in place in the said keyholes.

4. The structure of claim **1** wherein the said studs are mounted on a plurality of narrow strips of height approximately equal to the height of the locker assembly.

5. The structure of claim **1** wherein the said elements comprising the door frame and door, sides, and back are held together at the corners by means of angles of a length approximately equivalent to the height of the said locker assembly, said angles being secured to strips of approximately the height of the locker assembly, said strips having studs thereon, certain of the angles having holes therein for receipt of the said studs, said angles being secured to various of the said elements and said strips being secured to various of said elements.

6. The structure of claim **1** wherein a plurality of the said assemblies are mounted side-to-side and back-to-back, each of the said assemblies utilizing at least a single common side-wall and at least a single common back wall.

7. The structure of claim **1** wherein the top comprises a hinged shelf normally describing an angle of 180 degrees and fitting snugly within the sides, back and door frame of the said structure and wherein the bottom comprises a shelf having flanges along at least two opposite sides thereof, said flanges being supported by brackets mounted internally at the corners of the said locker assembly.

References Cited

UNITED STATES PATENTS

327,939	10/1885	Garrison	248—304
852,699	5/1907	Bonsall	312—257 X
1,268,509	6/1918	Stone	312—263
1,394,338	10/1921	Nyman et al.	312—257
1,450,180	4/1923	Jamison	312—257
1,573,254	2/1926	Lachaine	312—263
2,564,478	8/1951	Harbison	211—153
2,749,199	6/1956	O'Connor	312—257
2,932,409	4/1960	Wineman	211—176
2,980,482	4/1961	Baio	312—257
3,168,365	2/1965	Evans	211—153

JAMES T. McCALL, *Primary Examiner.*