US008885626B2

(12) **United States Patent**
Gu

(10) **Patent No.: US 8,885,626 B2**
(45) **Date of Patent: Nov. 11, 2014**

(54) **MOBILE ACCESS CONTROLLER FOR FIXED MOBILE CONVERGENCE OF DATA SERVICE OVER AN ENTERPRISE WLAN**

(76) Inventor: **Chris Gu**, Broomfield, CO (US)

(*) Notice: Subject to any disclaimer, the term of this patent is extended or adjusted under 35 U.S.C. 154(b) by 268 days.

(21) Appl. No.: **13/441,247**

(22) Filed: **Apr. 6, 2012**

(65) **Prior Publication Data**

US 2013/0267166 A1 Oct. 10, 2013

(51) **Int. Cl.**

H04W 4/00 (2009.01)
H04W 36/00 (2009.01)
H04L 29/06 (2006.01)

(52) **U.S. Cl.**

CPC ***H04W 36/0066*** (2013.01); ***H04W 36/005*** (2013.01); *H04L 63/18* (2013.01); ***H04W 36/0022*** (2013.01)

USPC **370/338**

(58) **Field of Classification Search**

None

See application file for complete search history.

(56) **References Cited**

U.S. PATENT DOCUMENTS

2004/0192295 A1* 9/2004 Tsao et al. 455/432.1
2005/0068929 A1* 3/2005 Chang et al. 370/338
2007/0178905 A1* 8/2007 El Mghazli et al. 455/445
2008/0219218 A1* 9/2008 Rydnell et al. 370/331
2009/0022152 A1* 1/2009 Henry et al. 370/389
2009/0042576 A1* 2/2009 Mukherjee et al. 455/436
2010/0035578 A1* 2/2010 Ahmed 455/411
2010/0199332 A1* 8/2010 Bachmann et al. 726/4
2011/0035787 A1* 2/2011 Naslund et al. 726/3
2011/0142006 A1* 6/2011 Sachs 370/331
2011/0216743 A1* 9/2011 Bachmann et al. 370/331
2013/0022033 A1* 1/2013 Shi 370/338
2013/0058275 A1* 3/2013 Melia et al. 370/328
2013/0121322 A1* 5/2013 Salkintzis 370/338
2013/0265985 A1* 10/2013 Salkintzis 370/331
2014/0096193 A1* 4/2014 Naslund et al. 726/3

* cited by examiner

Primary Examiner — Chirag Shah
Assistant Examiner — Amar Persaud
(74) *Attorney, Agent, or Firm* — Denver IP Law LLC

(57) **ABSTRACT**

A system for providing a mobile data service to a mobile device over a fixed wireless data network comprises an enterprise network having a WLAN. An enterprise Mobile Access Controller, configured to provide IP connections to the enterprise network and mobile devices, coupled between the enterprise network and a Mobile Wireless Data Network. The enterprise Mobile Access Controller is further coupled, via a first IPTN, to an enterprise Mobile Signaling Gateway resident in the MWDN. Additionally, the enterprise Mobile Access Controller is coupled, via a second IPTN, to an enterprise Mobile User-plane Aggregator configured to provide IP connections to the Mobile Wireless Data Network. The enterprise Mobile Access Controller is further configured to receive a first control-plane data from the enterprise Mobile Signaling Gateway, via the first IPTN, wherein the first control-plane data at least provides configuration and management instructions to the enterprise Mobile Access Controller.

12 Claims, 22 Drawing Sheets

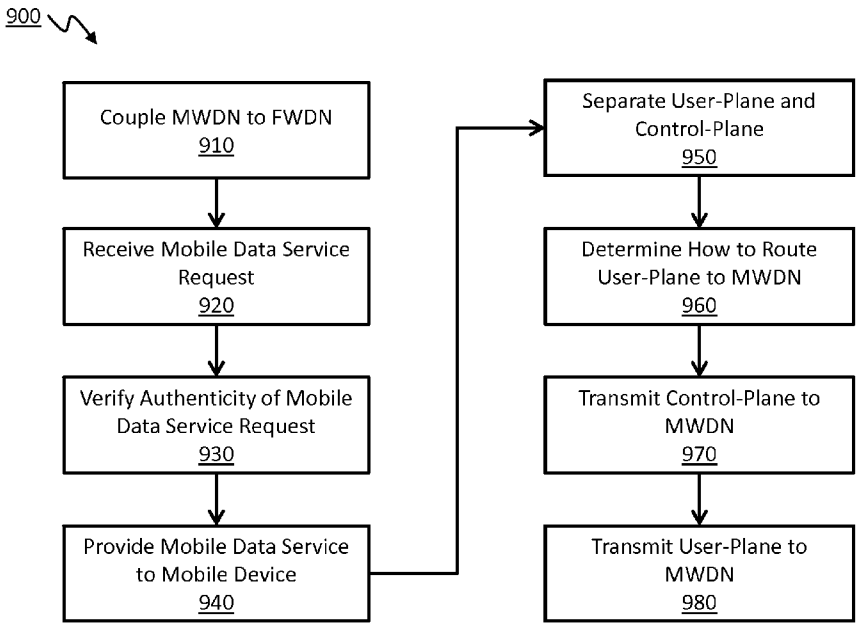

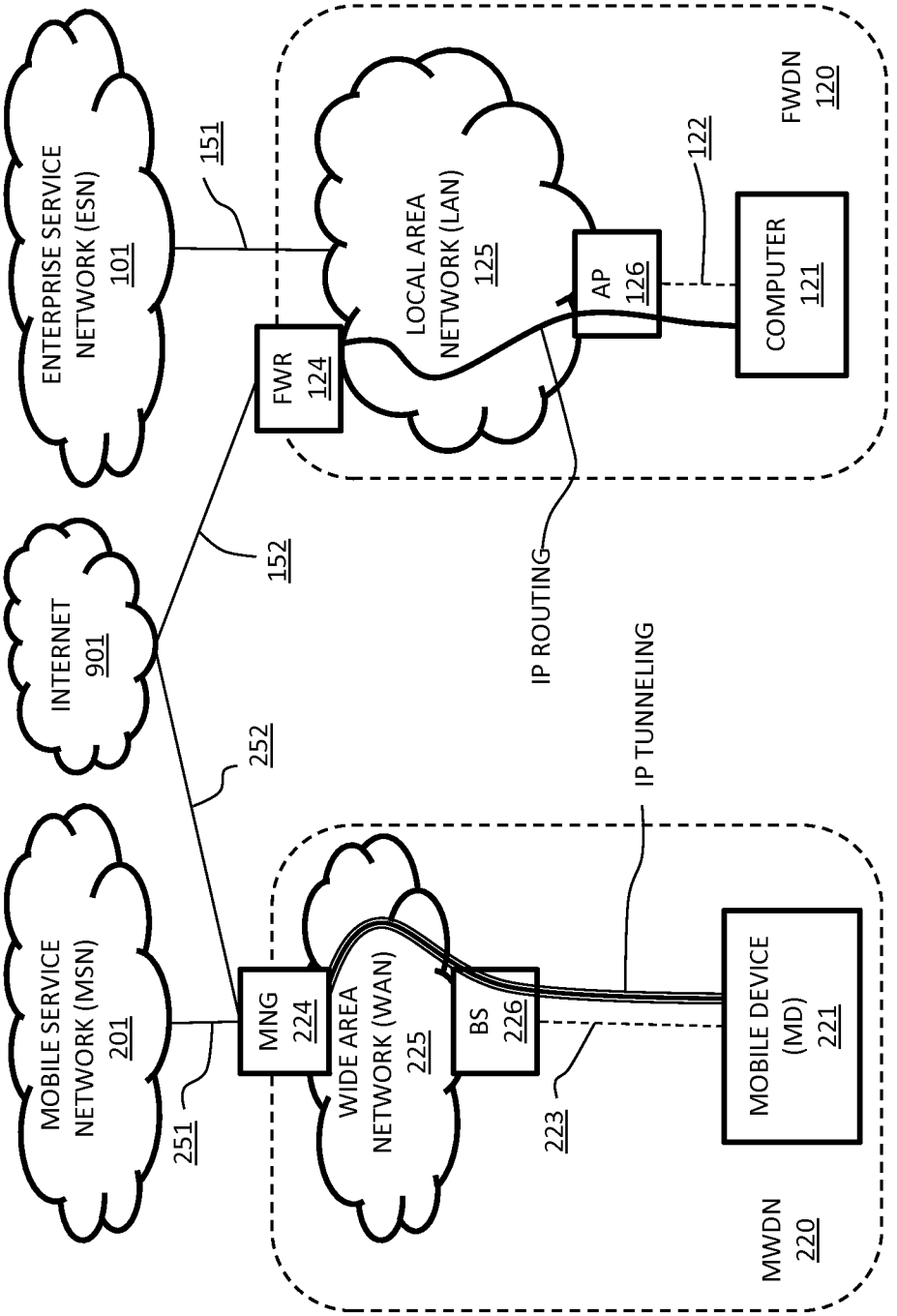

FIG. 1 (Prior Art)

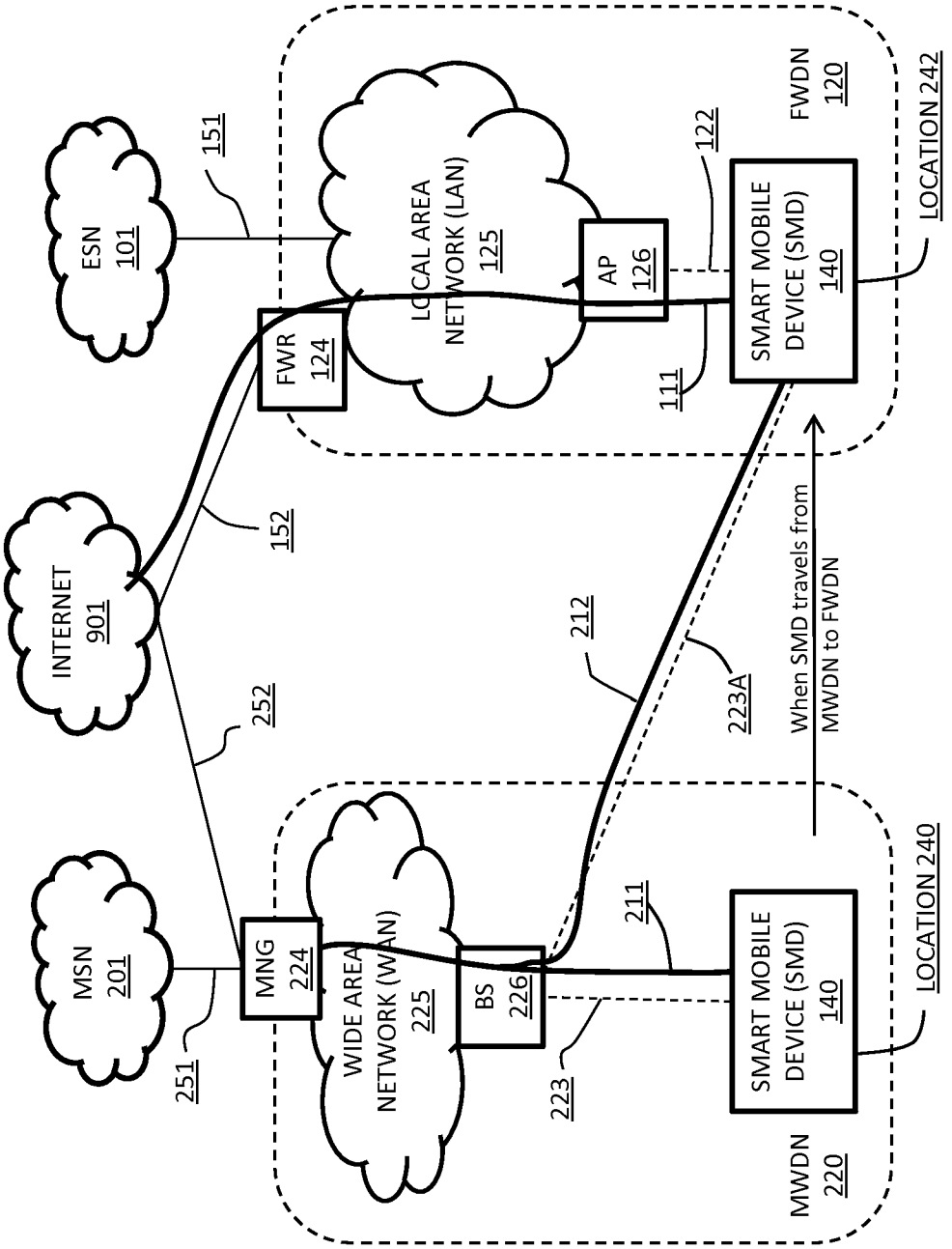

FIG. 2A (Prior Art)

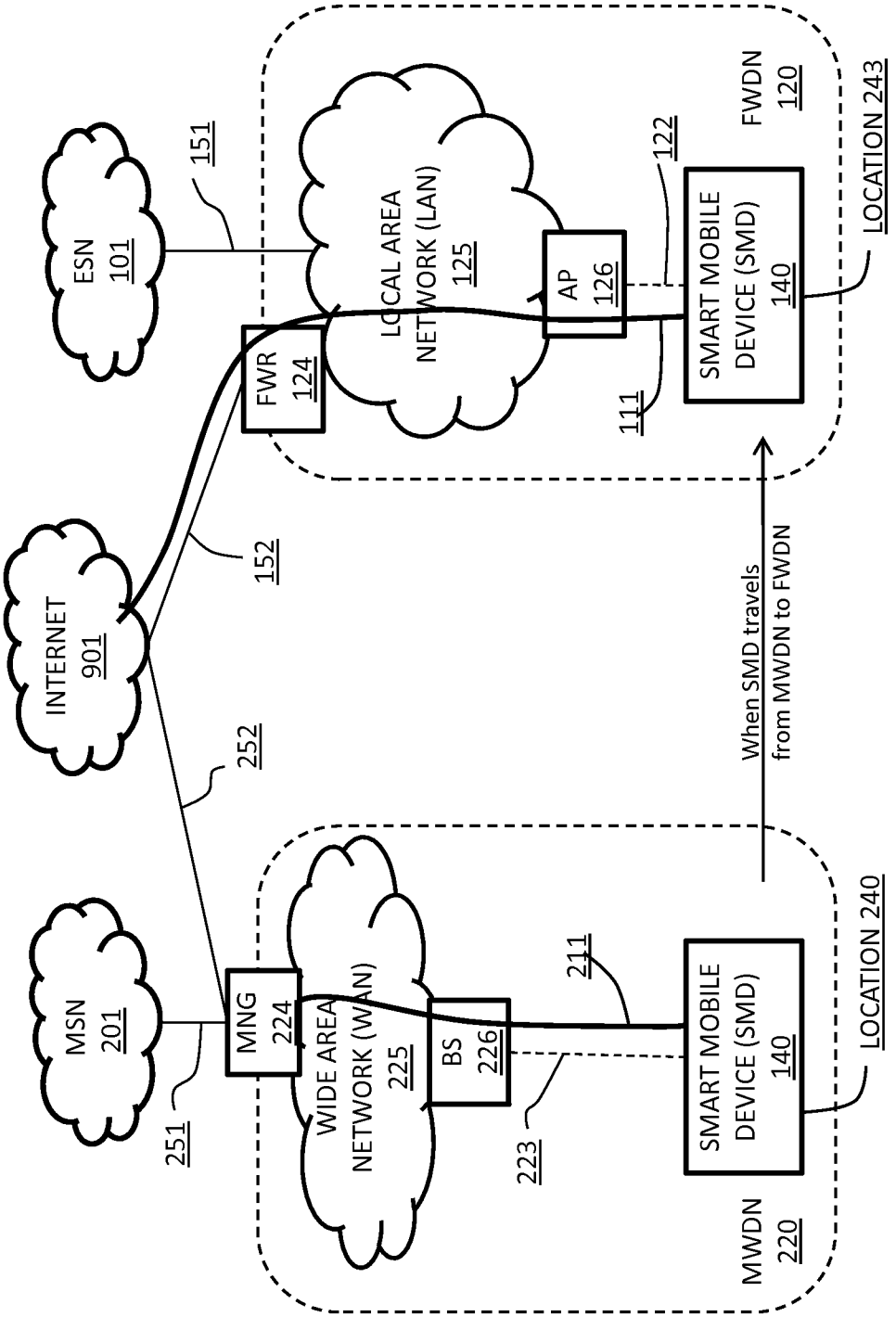

FIG. 2B (Prior Art)

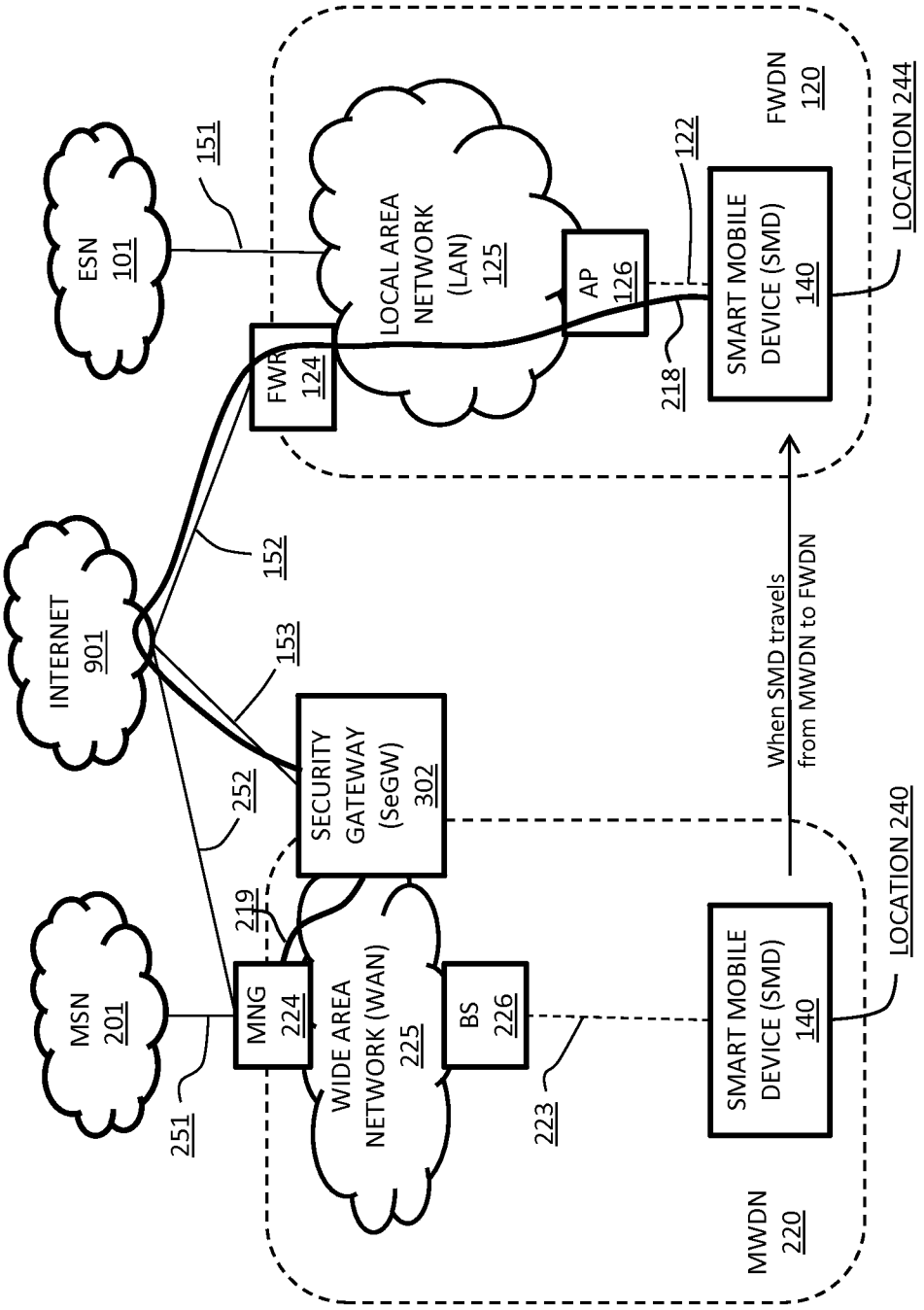

FIG. 3 (Prior Art)

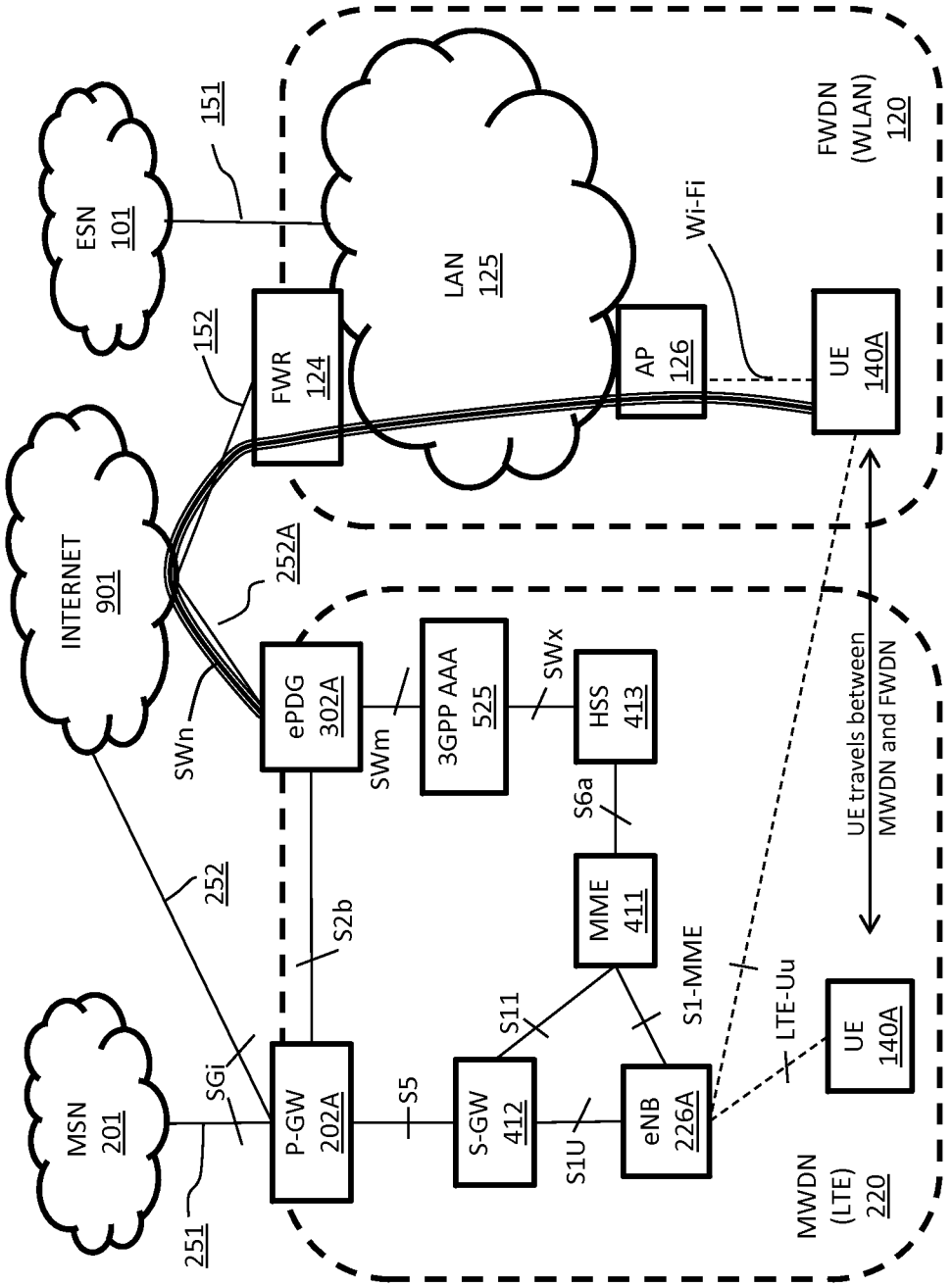

FIG. 4A (Prior Art)

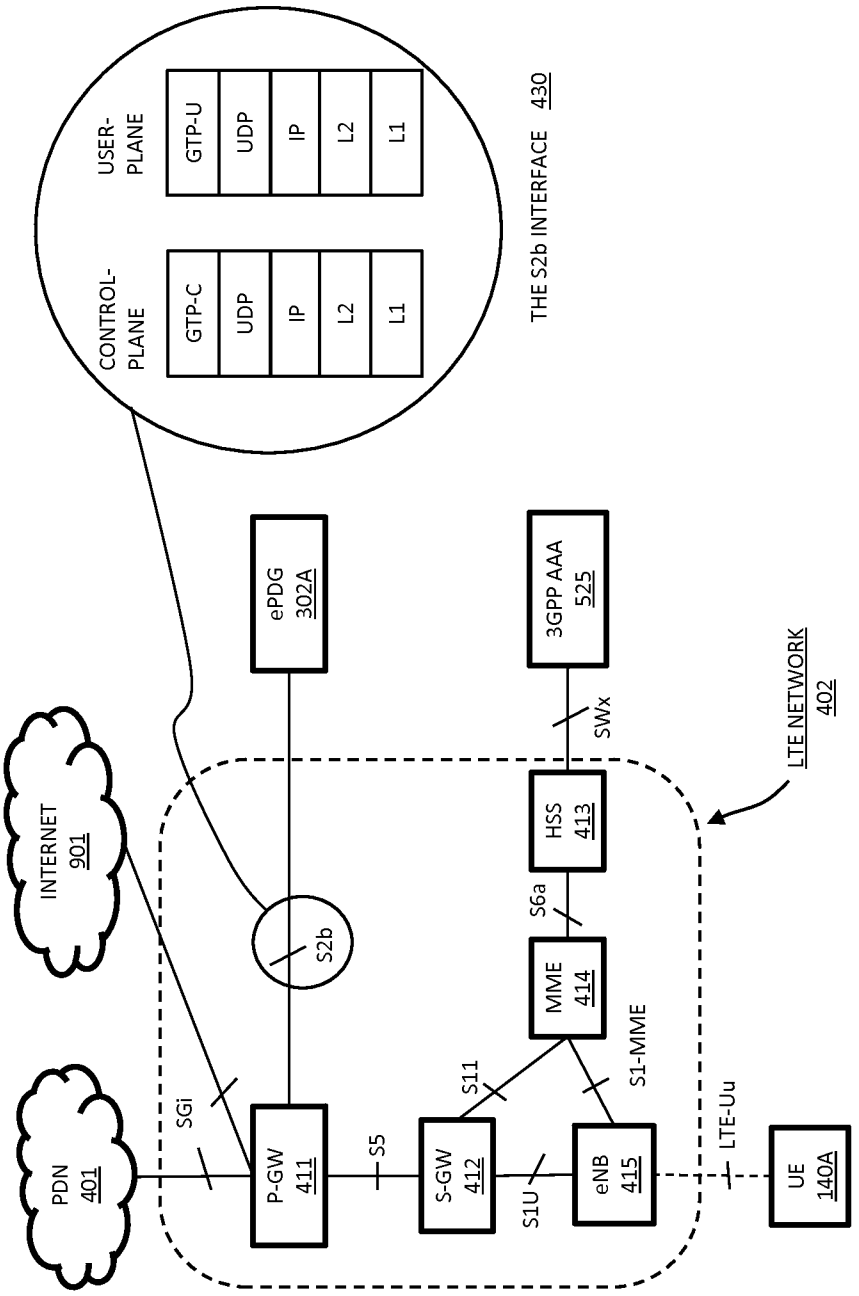

FIG. 4B (Prior Art)

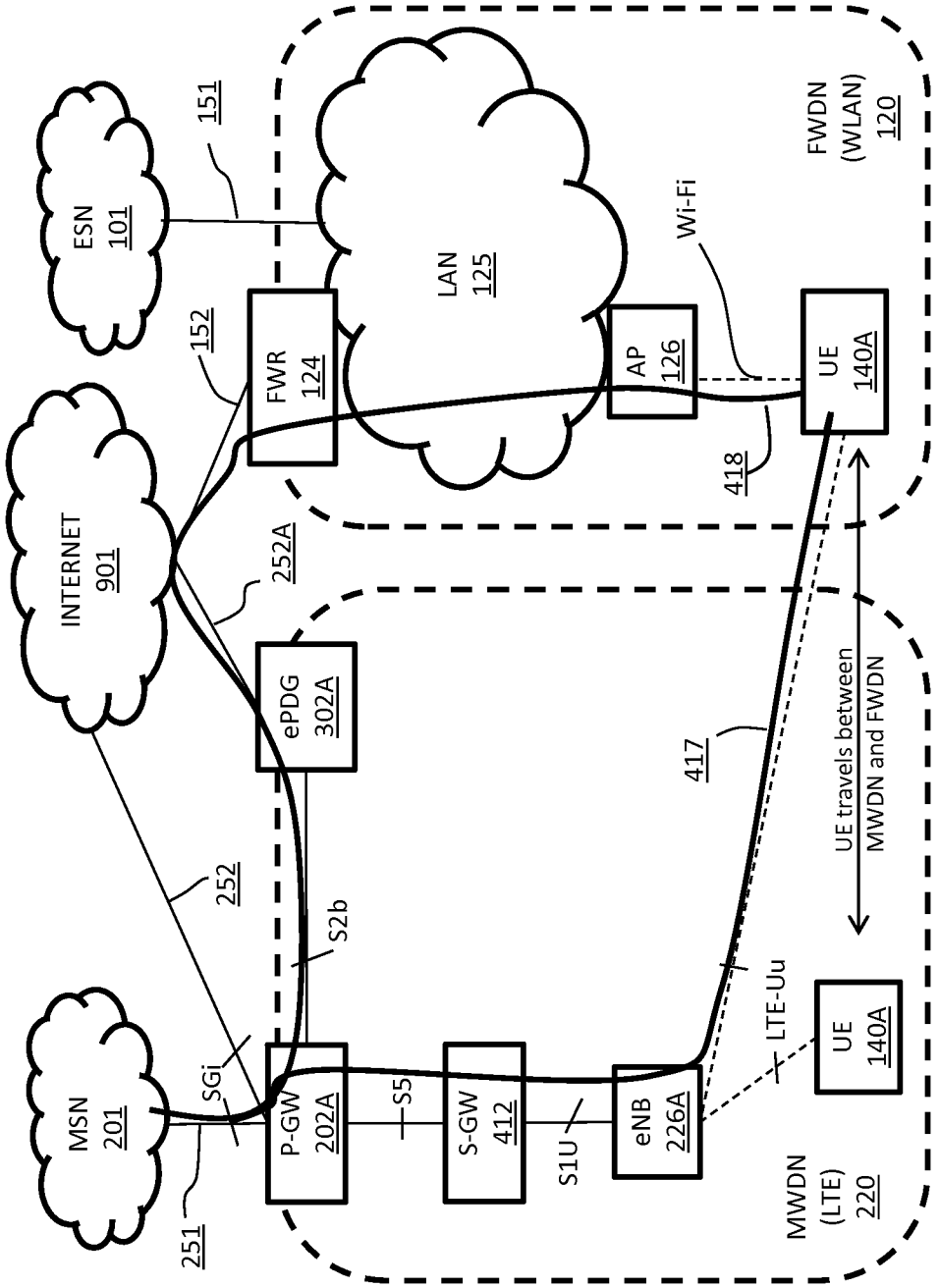

FIG. 4C (Prior Art)

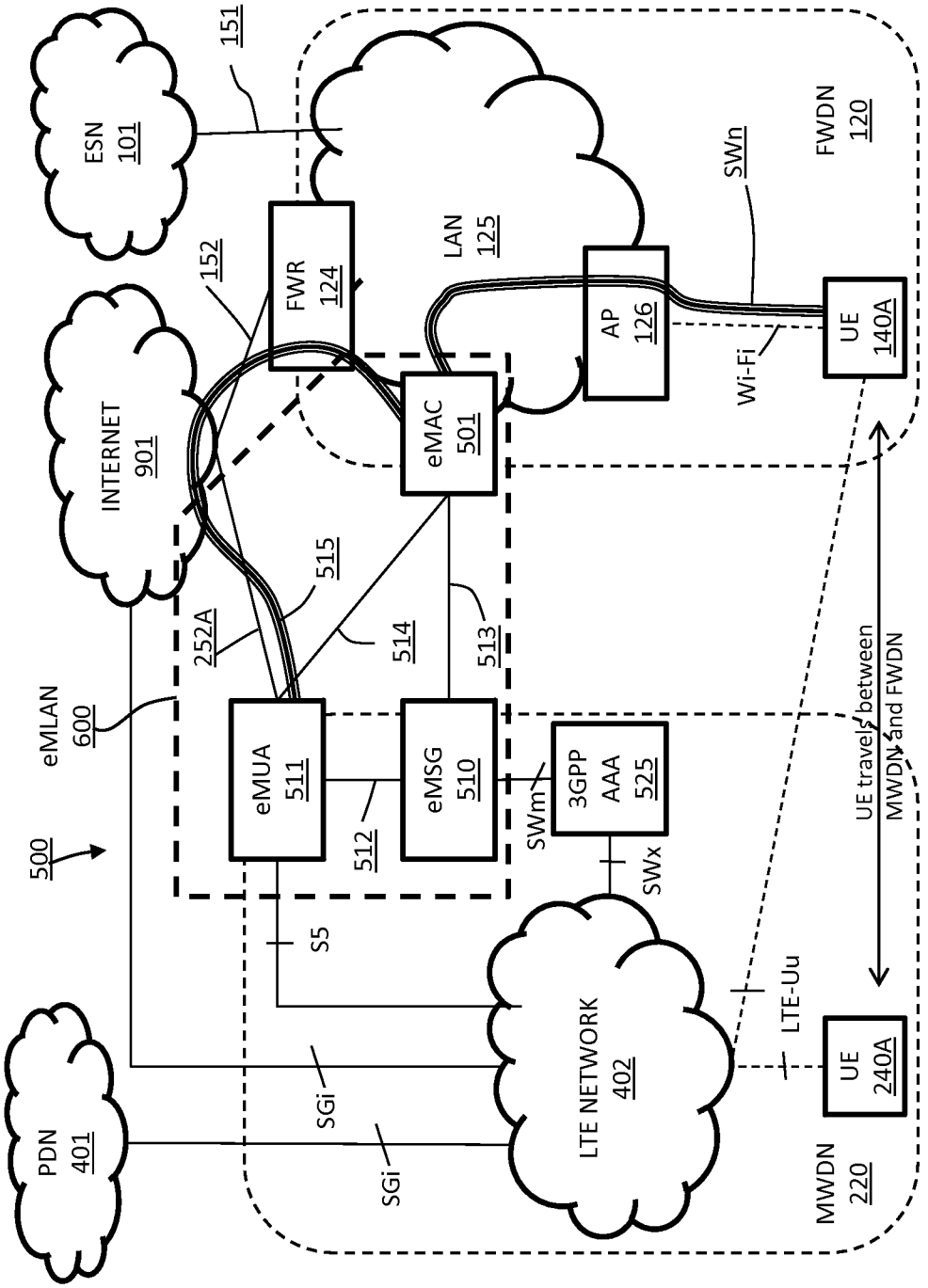
ESN
101
151
INTERNET
901
152
FWR
124
LAN
125
AP
126
SWn
FWDN
120
UE
140A
Wi-Fi
eMAC
501
515
252A
514
513
eMLAN
600
500
eMUA
511
eMSG
510
512
SWm
3GPP
AAA
525
SWx
S5
UE travels between
MWDN and FWDN
LTE-Uu
PDN
401
SGi
SGi
LTE NETWORK
402
UE
240A
MWDN
220

FIG. 5A

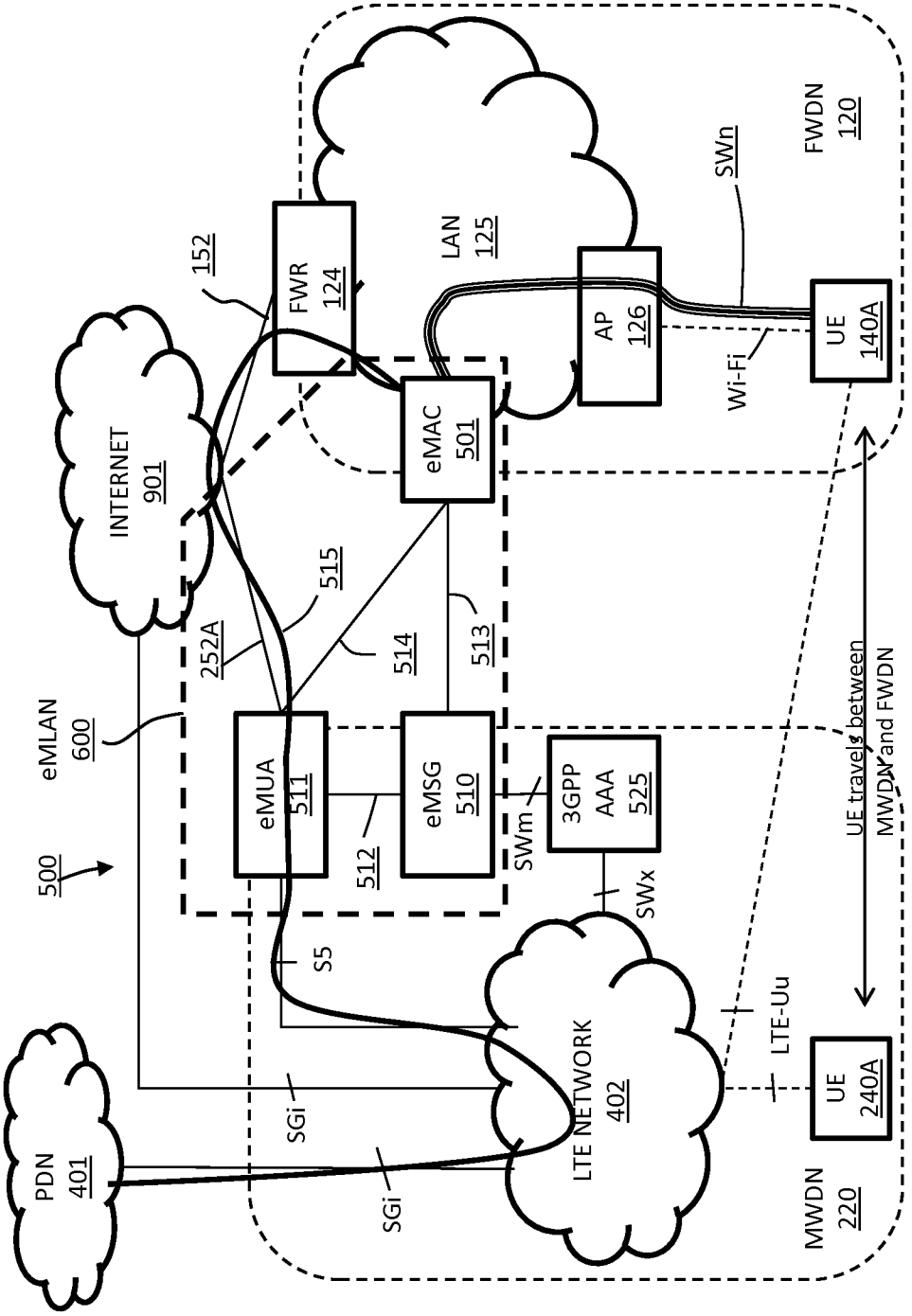
500
eMLAN
600
PDN
401
INTERNET
901
152
FWR
124
LAN
125
AP
126
SWn
FWDN
120
UE
140A
Wi-Fi
eMAC
501
515
252A
514
513
eMUA
511
eMSG
510
512
3GPP
AAA
525
SWm
SWx
S5
SGi
SGi
LTE NETWORK
402
LTE-Uu
UE
240A
MWDN
220
UE travels between
MWDN and FWDN

FIG. 5B

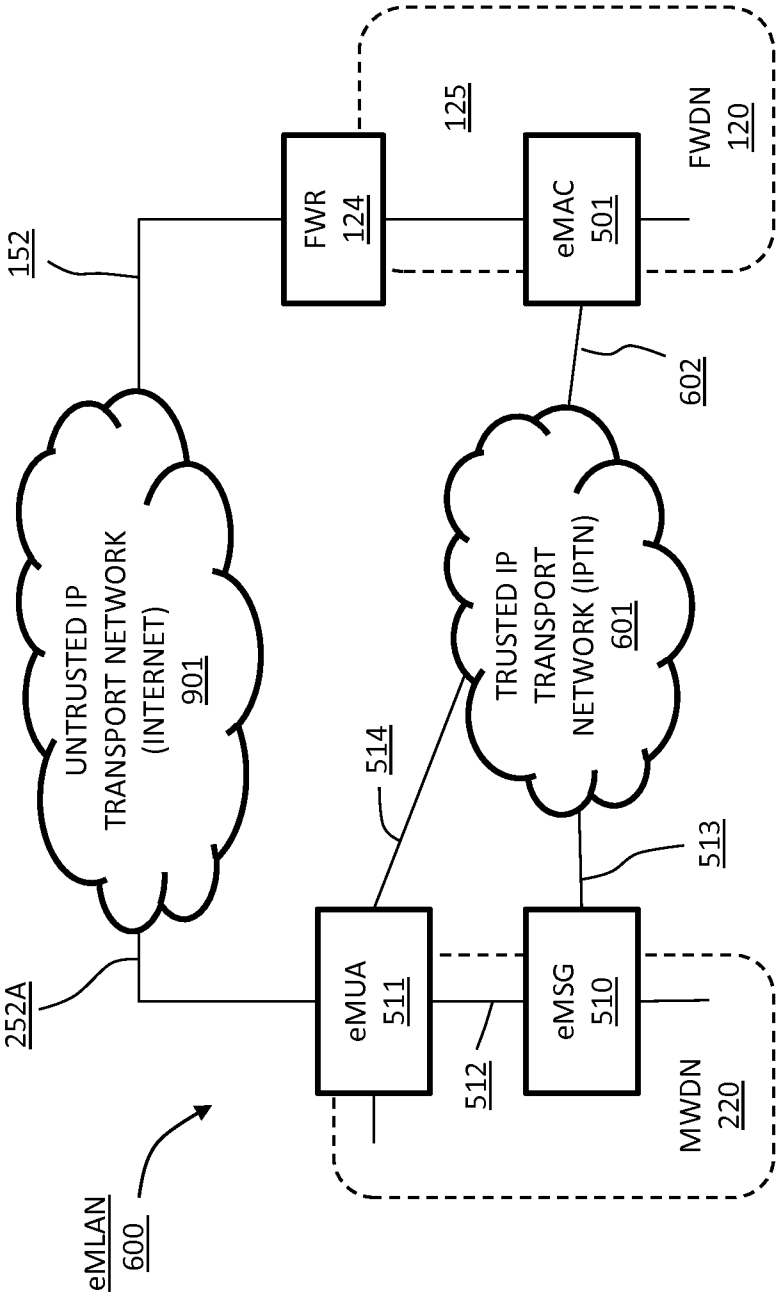
eMLAN
600
252A
152
UNTRUSTED IP
TRANSPORT NETWORK
(INTERNET)
901
eMUA
511
514
512
eMSG
510
513
TRUSTED IP
TRANSPORT
NETWORK (IPTN)
601
602
FWR
124
125
eMAC
501
FWDN
120
MWDN
220

FIG. 6A

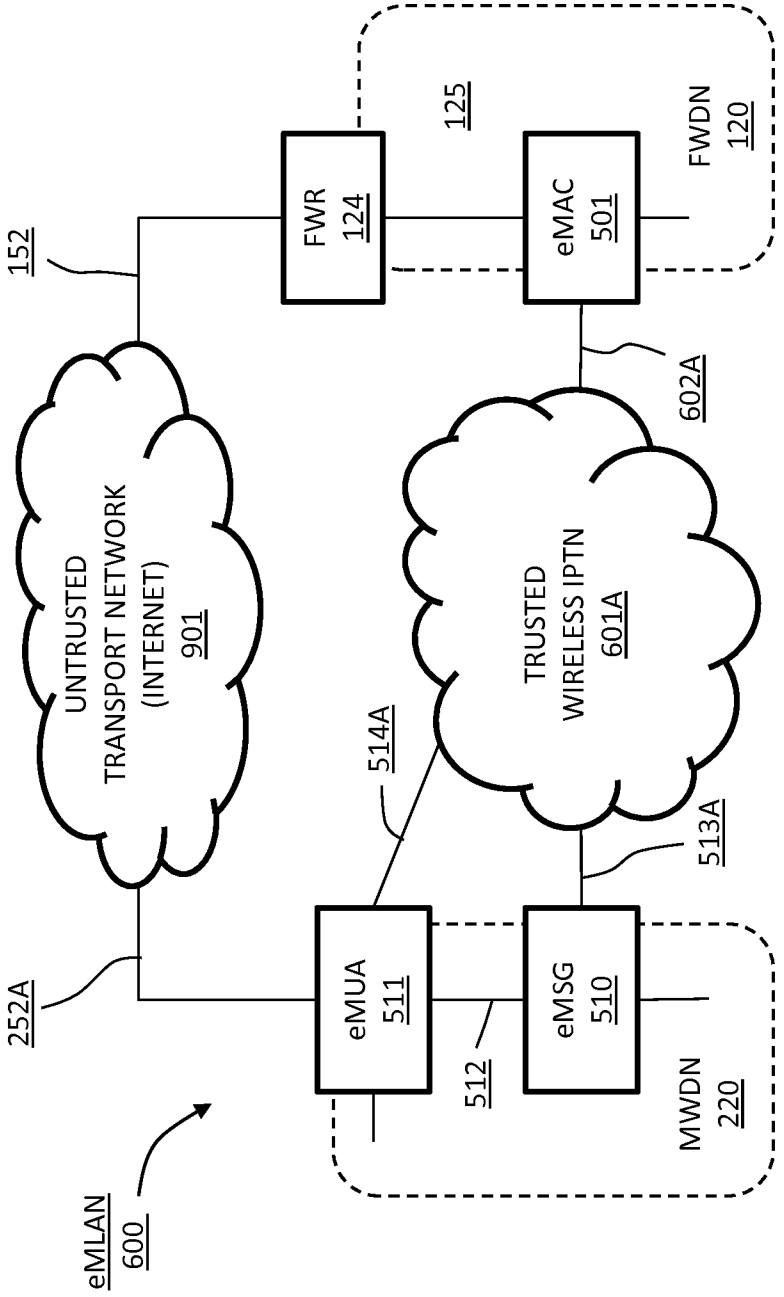
152
UNTRUSTED
TRANSPORT NETWORK
(INTERNET)
901
252A
FWR
124
125
eMAC
501
FWDN
120
602A
TRUSTED
WIRELESS IPTN
601A
514A
513A
eMUA
511
512
eMSG
510
MWDN
220
eMLAN
600

FIG. 6B

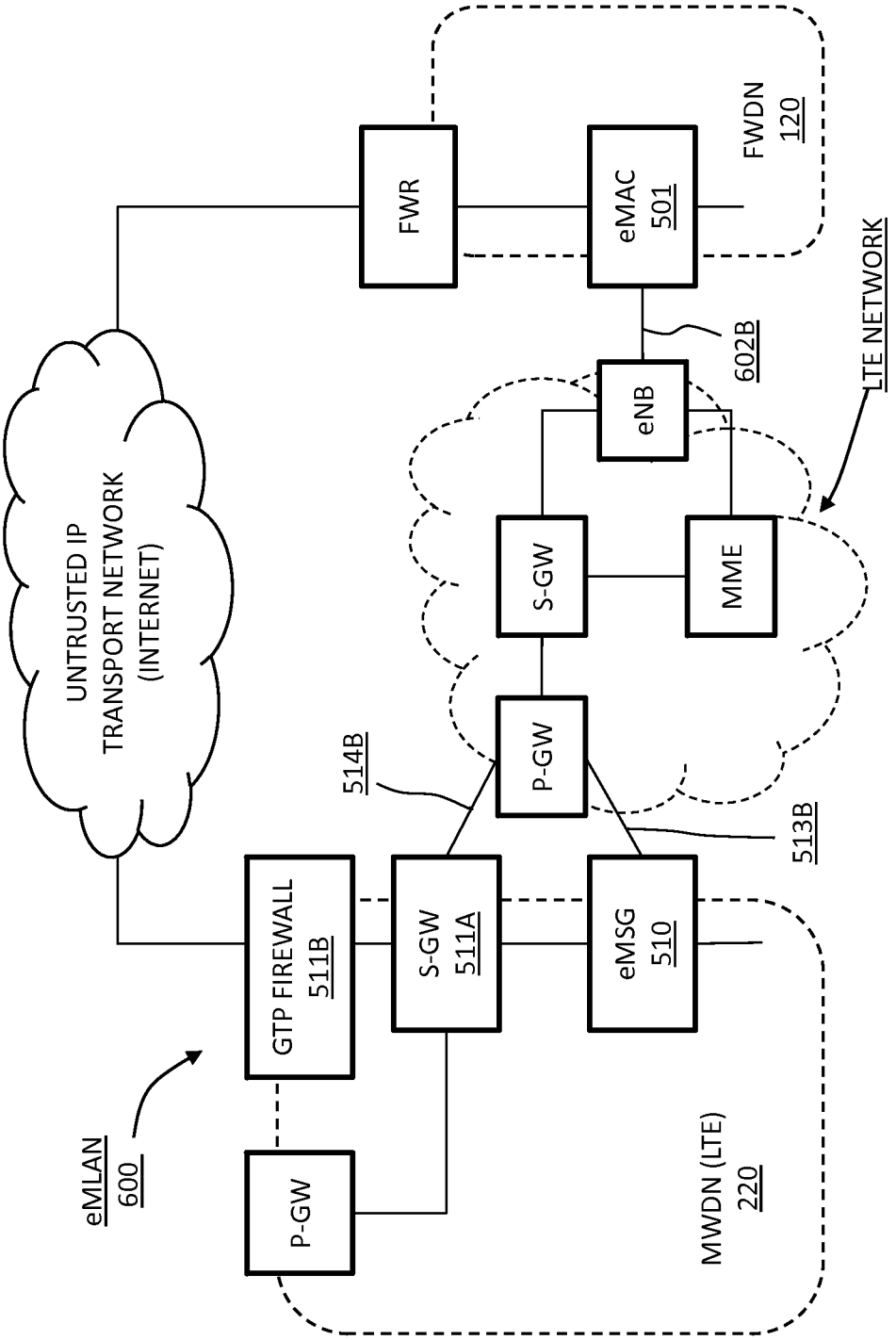
UNTRUSTED IP
TRANSPORT NETWORK
(INTERNET)
FWR
eMAC
501
FWDN
120
602B
eNB
LTE NETWORK
402
S-GW
MME
P-GW
514B
513B
GTP FIREWALL
511B
S-GW
511A
eMSG
510
eMLAN
600
P-GW
MWDN (LTE)
220

FIG. 6C

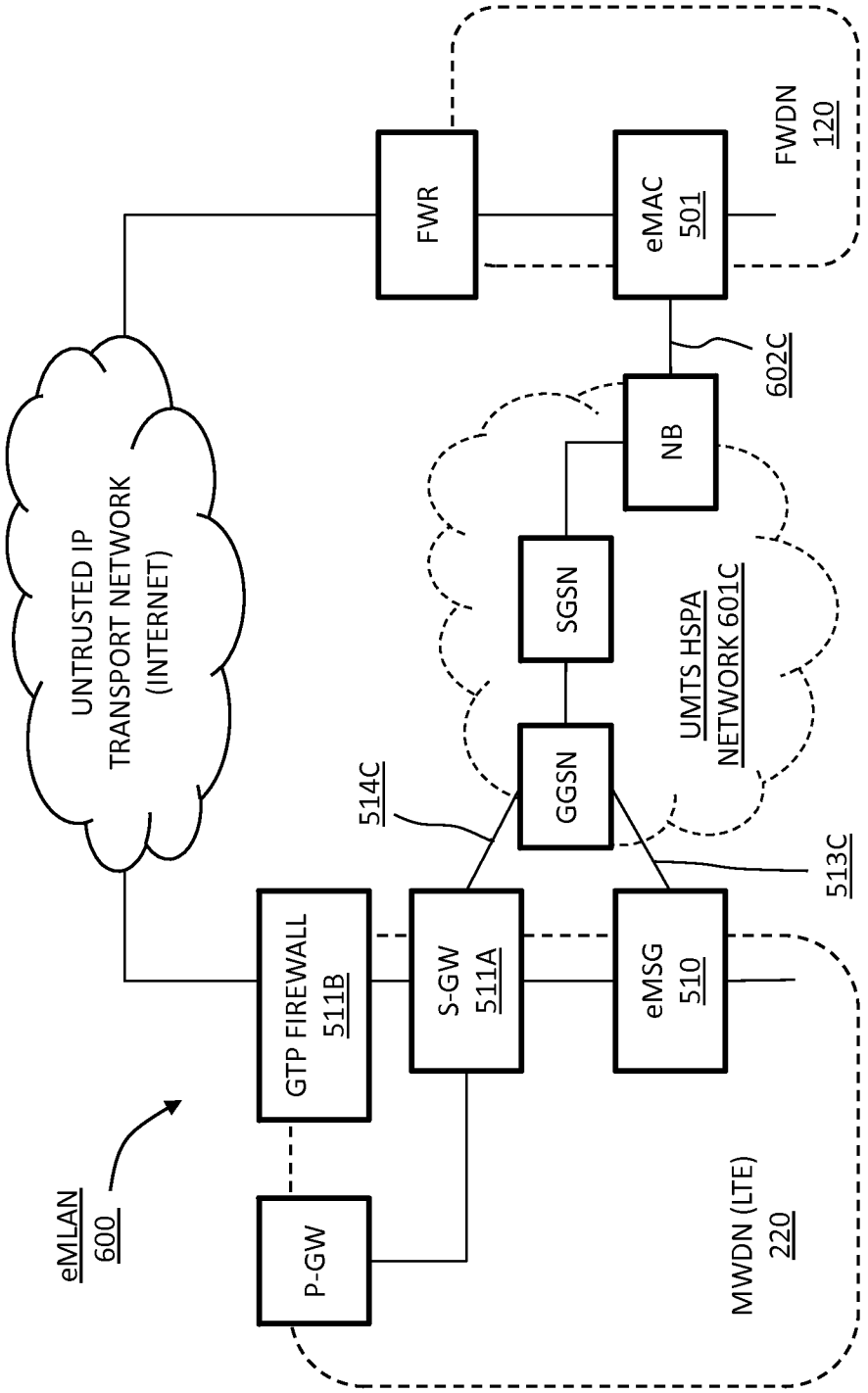
eMLAN
600
UNTRUSTED IP
TRANSPORT NETWORK
(INTERNET)
P-GW
GTP FIREWALL
511B
S-GW
511A
514C
GGSN
SGSN
NB
FWR
eMSG
510
513C
eMAC
501
602C
UMTS HSPA
NETWORK 601C
MWDN (LTE)
220
FWDN
120

FIG. 6D

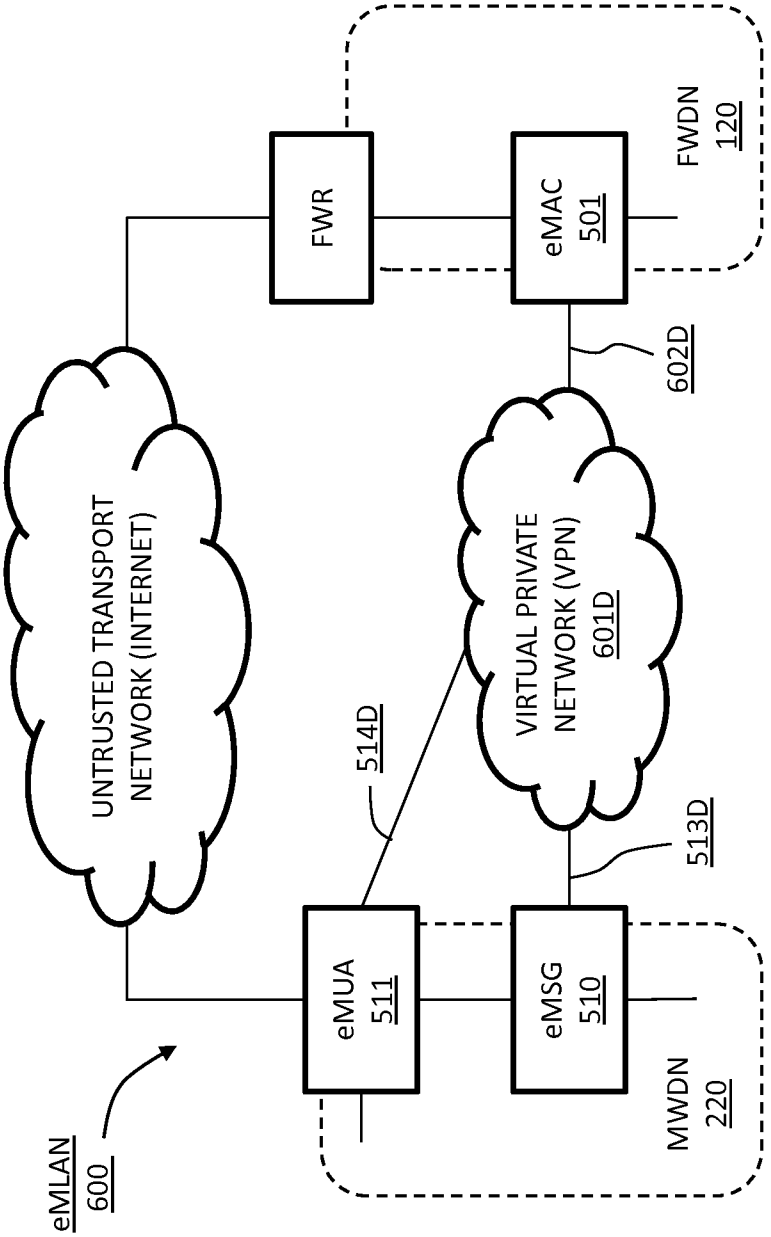
eMLAN
600
UNTRUSTED TRANSPORT
NETWORK (INTERNET)
FWR
eMUA
511
514D
VIRTUAL PRIVATE
NETWORK (VPN)
601D
eMAC
501
602D
eMSG
510
513D
FWDN
120
MWDN
220

FIG. 6E

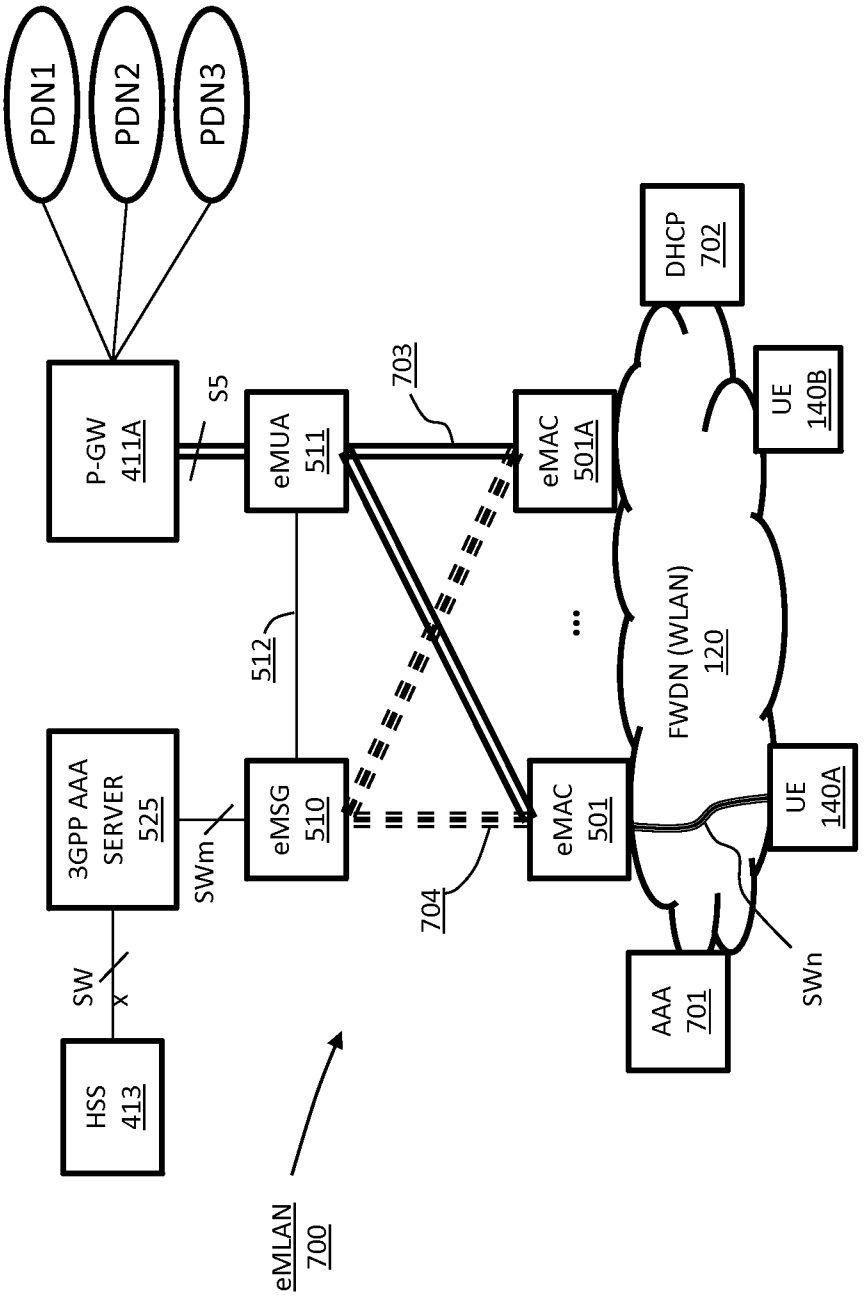
PDN1
PDN2
PDN3
P-GW 411A
S5
eMUA 511
703
eMAC 501A
DHCP 702
UE 140B
512
FWDN (WLAN) 120
3GPP AAA SERVER 525
SWm
eMSG 510
704
eMAC 501
UE 140A
SW
HSS 413
AAA 701
SWn
eMLAN 700

FIG. 7

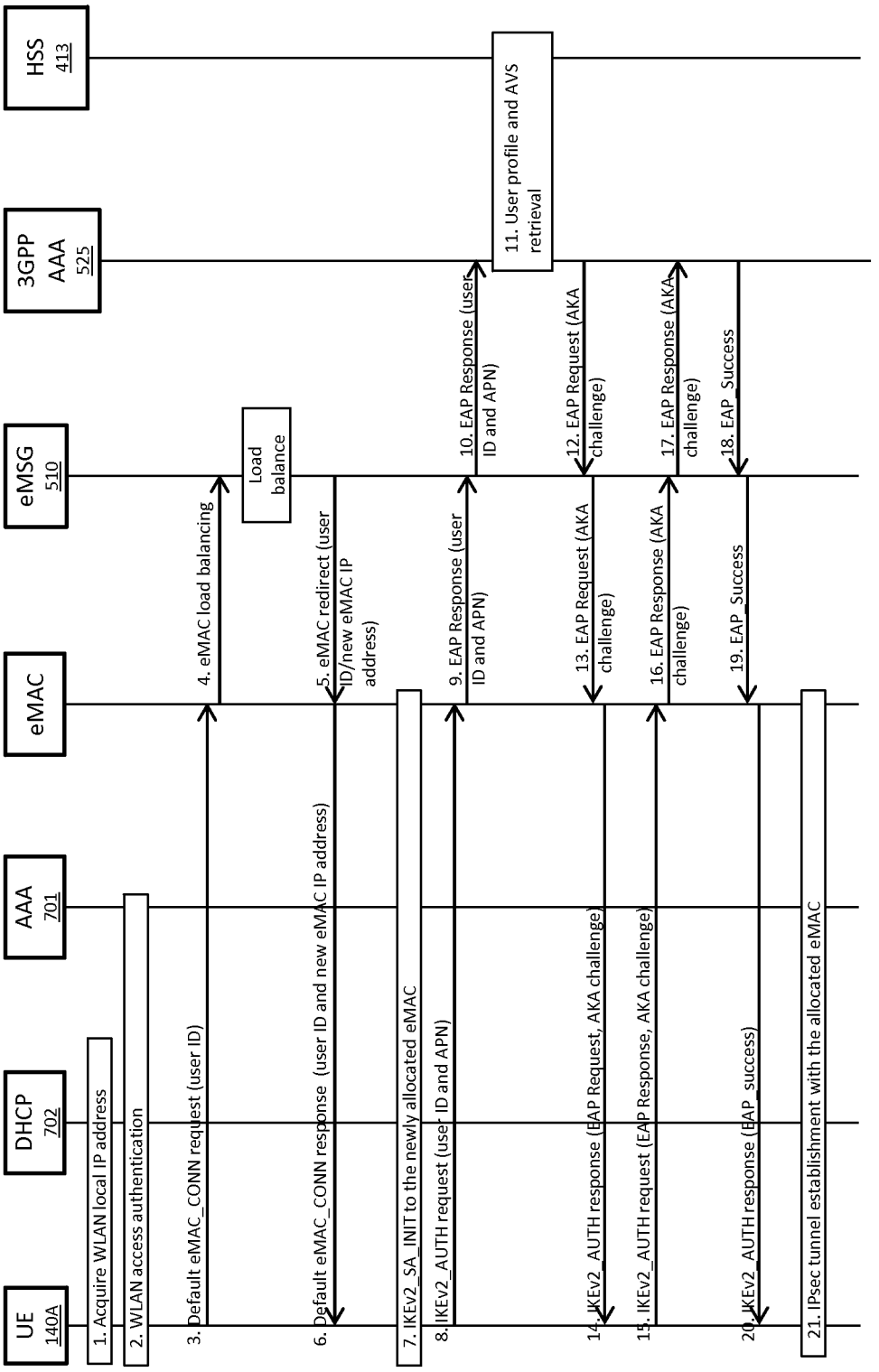
UE 140A
DHCP 702
AAA 701
eMAC
eMSG 510
3GPP AAA 525
HSS 413
1. Acquire WLAN local IP address
2. WLAN access authentication
3. Default eMAC_CONN request (user ID)
4. eMAC load balancing
Load balance
5. eMAC redirect (user ID/new eMAC IP address)
6. Default eMAC_CONN response (user ID and new eMAC IP address)
7. IKEv2_SA_INIT to the newly allocated eMAC
8. IKEv2_AUTH request (user ID and APN)
9. EAP Response (user ID and APN)
10. EAP Response (user ID and APN)
11. User profile and AVS retrieval
12. EAP Request (AKA challenge)
13. EAP Request (AKA challenge)
14. IKEv2_AUTH response (EAP Request, AKA challenge)
15. IKEv2_AUTH request (EAP Response, AKA challenge)
16. EAP Response (AKA challenge)
17. EAP Response (AKA challenge)
18. EAP_Success
19. EAP_Success
20. IKEv2_AUTH response (EAP_success)
21. IPsec tunnel establishment with the allocated eMAC

FIG. 8A

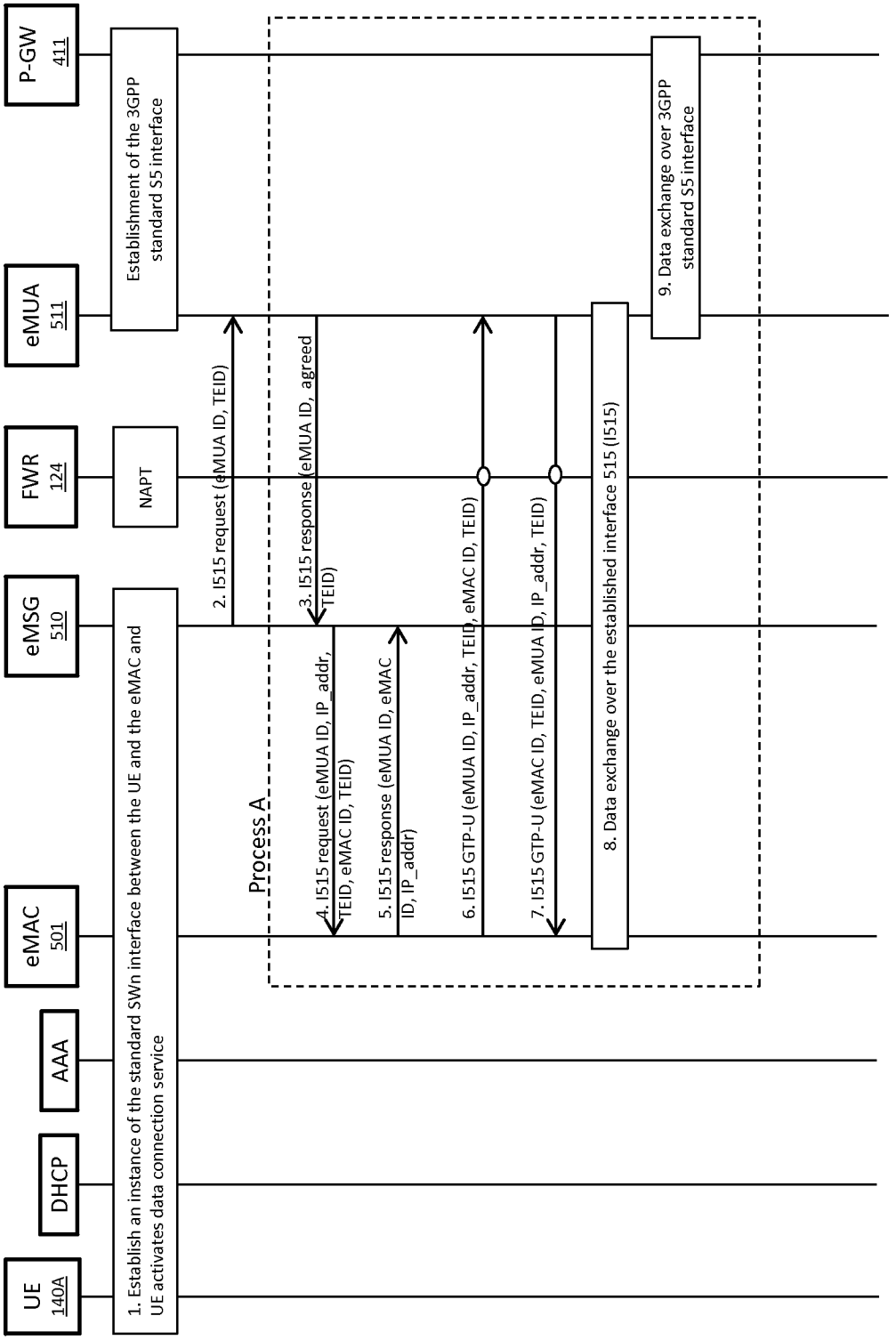
UE 140A
DHCP
AAA
eMAC 501
eMSG 510
FWR 124
eMUA 511
P-GW 411
1. Establish an instance of the standard SWn interface between the UE and the eMAC and UE activates data connection service
NAPT
Establishment of the 3GPP standard S5 interface
Process A
2. I515 request (eMUA ID, TEID)
3. I515 response (eMUA ID, agreed TEID)
4. I515 request (eMUA ID, IP_addr, TEID, eMAC ID, TEID)
5. I515 response (eMUA ID, eMAC ID, IP_addr)
6. I515 GTP-U (eMUA ID, IP_addr, TEID, eMAC ID, TEID)
7. I515 GTP-U (eMAC ID, TEID, eMUA ID, IP_addr, TEID)
8. Data exchange over the established interface 515 (I515)
9. Data exchange over 3GPP standard S5 interface

FIG. 8B

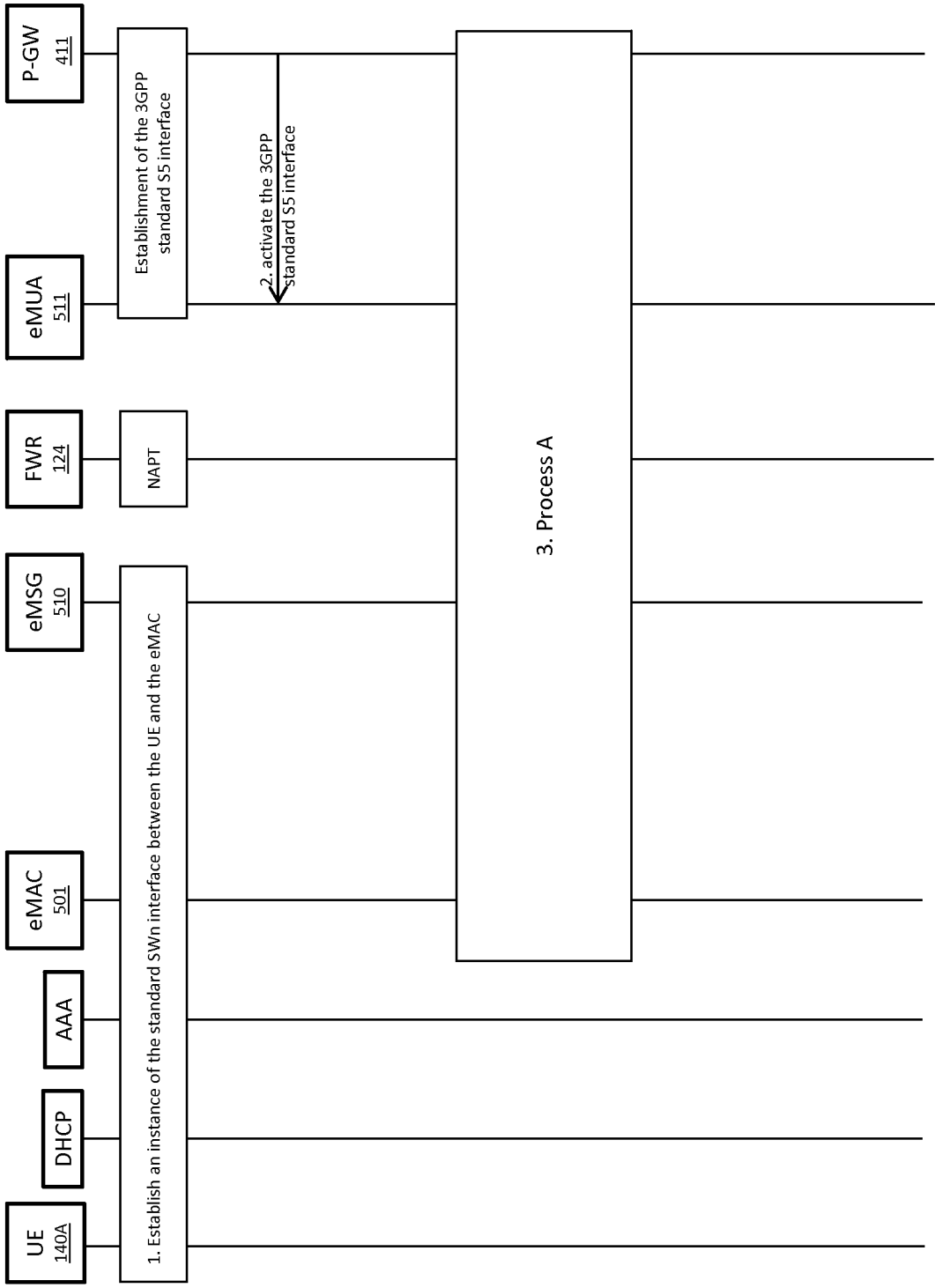
UE
140A
DHCP
AAA
eMAC
501
eMSG
510
FWR
124
eMUA
511
P-GW
411
1. Establish an instance of the standard SWn interface between the UE and the eMAC
NAPT
Establishment of the 3GPP standard S5 interface
2. activate the 3GPP Standard S5 interface
3. Process A

FIG. 8C

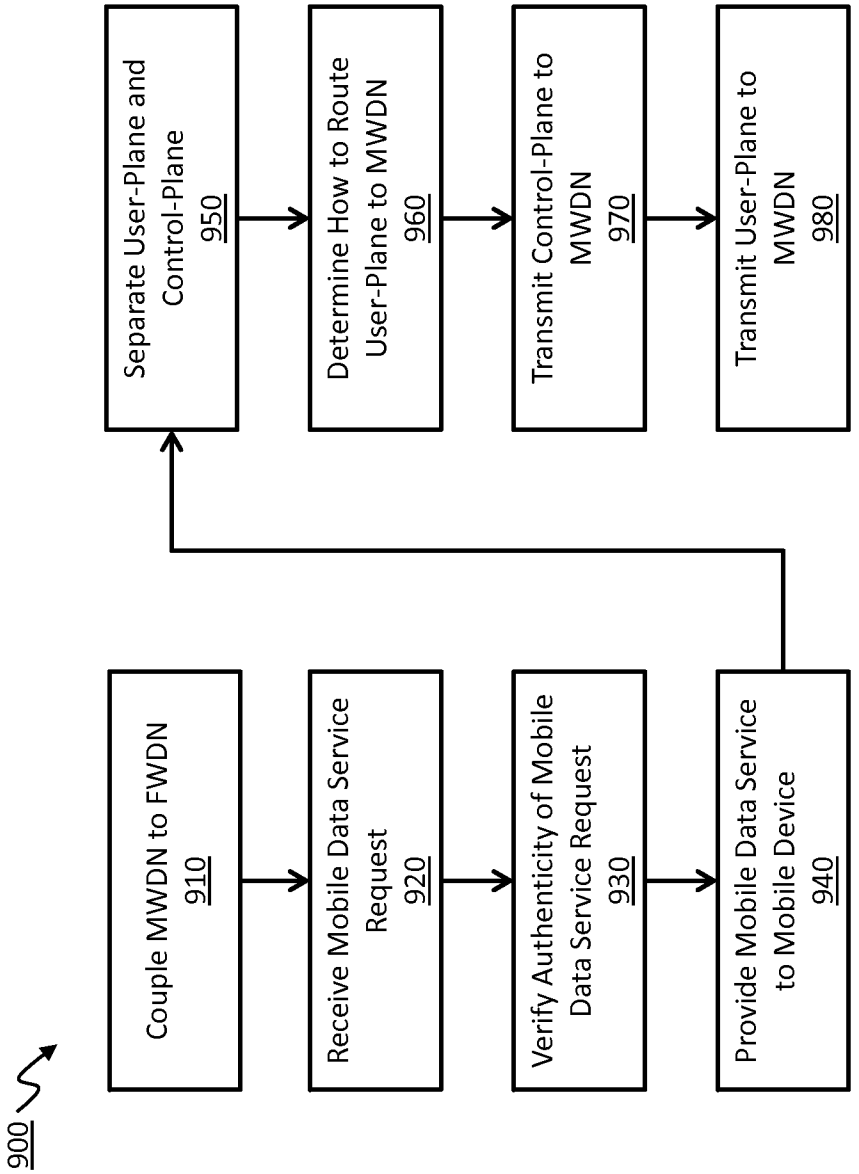
900
Couple MWDN to FWDN 910
Receive Mobile Data Service Request 920
Verify Authenticity of Mobile Data Service Request 930
Provide Mobile Data Service to Mobile Device 940
Separate User-Plane and Control-Plane 950
Determine How to Route User-Plane to MWDN 960
Transmit Control-Plane to MWDN 970
Transmit User-Plane to MWDN 980

FIG. 9

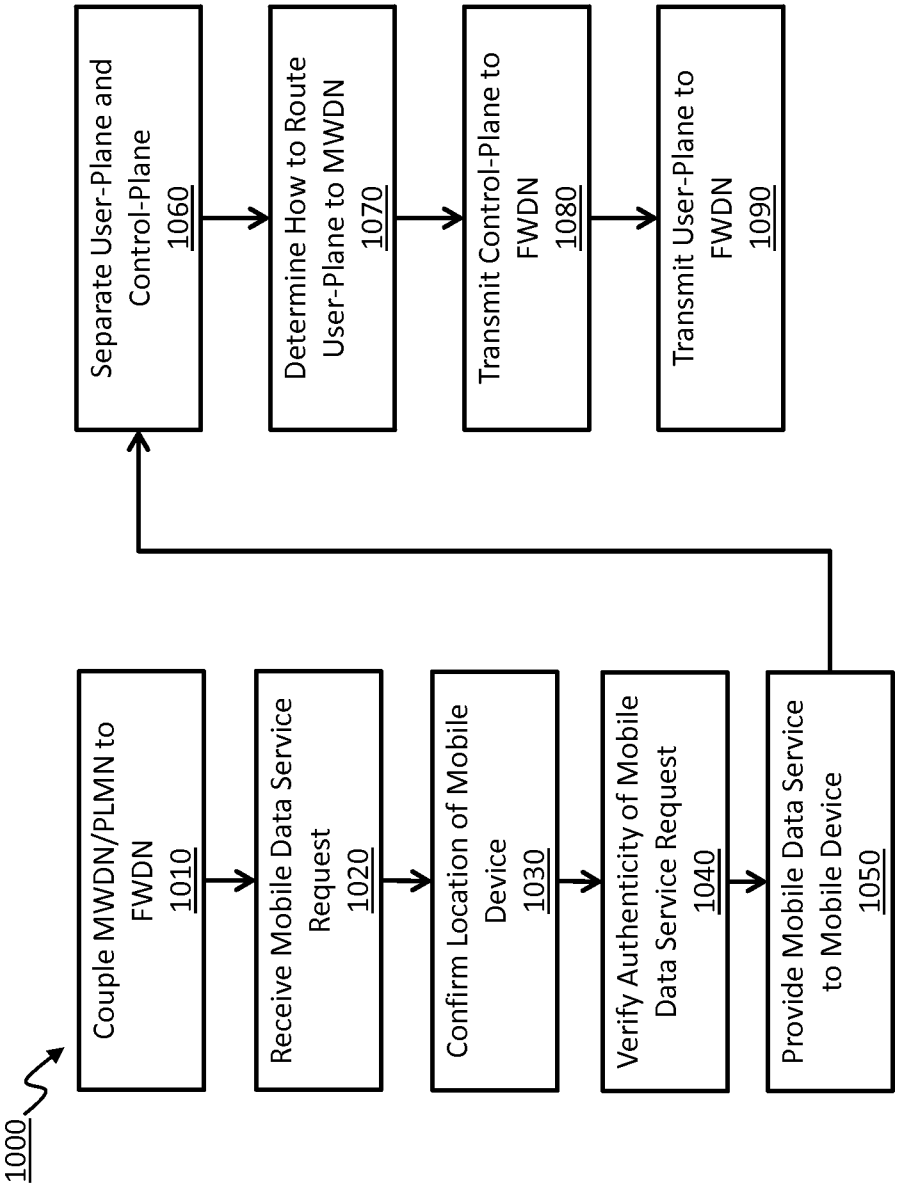
1000
Couple MWDN/PLMN to FWDN 1010
Receive Mobile Data Service Request 1020
Confirm Location of Mobile Device 1030
Verify Authenticity of Mobile Data Service Request 1040
Provide Mobile Data Service to Mobile Device 1050
Separate User-Plane and Control-Plane 1060
Determine How to Route User-Plane to MWDN 1070
Transmit Control-Plane to FWDN 1080
Transmit User-Plane to FWDN 1090

FIG. 10

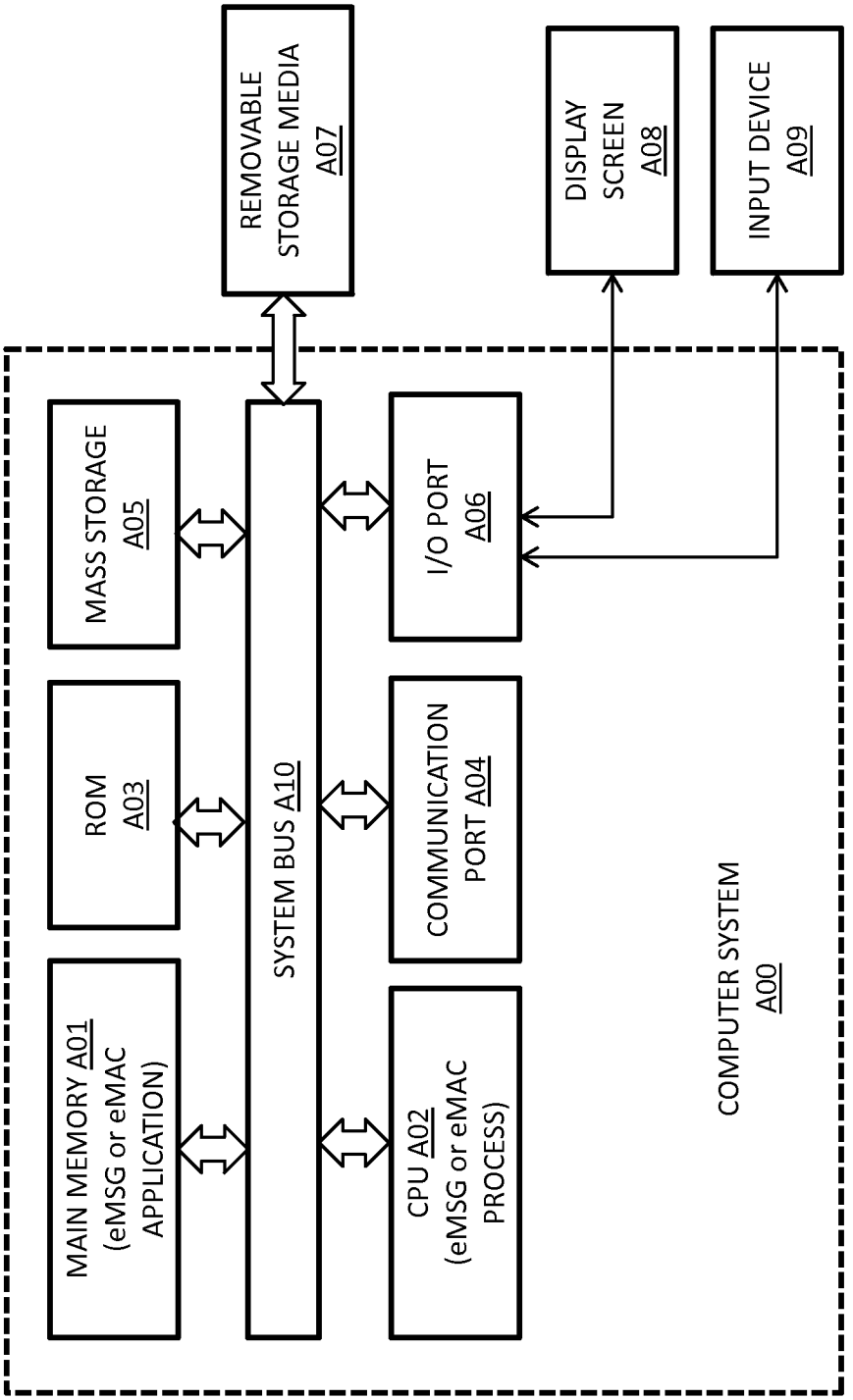
MAIN MEMORY A01
(eMSG or eMAC
APPLICATION)
ROM
A03
MASS STORAGE
A05
SYSTEM BUS A10
CPU A02
(eMSG or eMAC
PROCESS)
COMMUNICATION
PORT A04
I/O PORT
A06
REMOVABLE
STORAGE MEDIA
A07
DISPLAY
SCREEN
A08
INPUT DEVICE
A09
COMPUTER SYSTEM
A00

FIG. 11

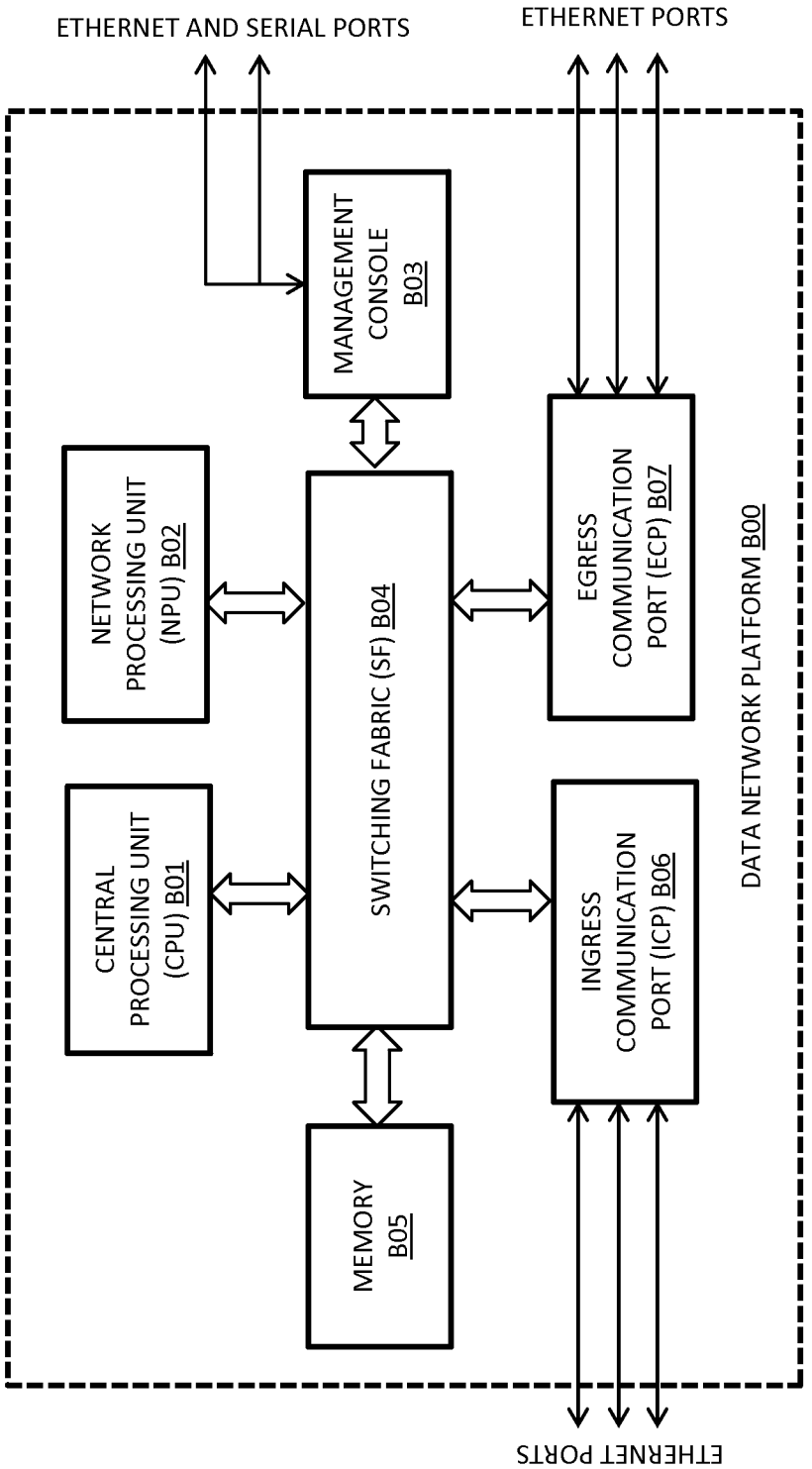
ETHERNET AND SERIAL PORTS
ETHERNET PORTS
MANAGEMENT CONSOLE B03
NETWORK PROCESSING UNIT (NPU) B02
SWITCHING FABRIC (SF) B04
EGRESS COMMUNICATION PORT (ECP) B07
CENTRAL PROCESSING UNIT (CPU) B01
INGRESS COMMUNICATION PORT (ICP) B06
MEMORY B05
DATA NETWORK PLATFORM B00
ETHERNET PORTS

FIG. 12

MOBILE ACCESS CONTROLLER FOR FIXED MOBILE CONVERGENCE OF DATA SERVICE OVER AN ENTERPRISE WLAN

CROSS-REFERENCE TO RELATED APPLICATIONS

The present application is related to U.S. patent application Ser. No. 13/441,262, entitled "Mobile Gateway for Fixed Mobile Convergence of Data Service over an Enterprise WLAN" and filed on Apr. 5, 2012, which is specifically incorporated by reference herein for all it discloses or teaches.

TECHNICAL FIELD

Embodiments disclosed herein generally relate to mobile and Wi-Fi data communications and services. More specifically, embodiments relate to providing mobile data services across an enterprise wireless local area network.

BACKGROUND

Mobile Wireless Data Networks (hereinafter "MWDN") and Wireless Local Area Networks (hereinafter "WLAN") provide for wireless data services, however, both networks were designed for differing communication objectives.

MWDN's were designed to provide data communications and services to mobile devices (hereinafter "MD") such as smartphones, mobile broadband data modem cards, etc. MWDN's generally cover large geographical areas (e.g. cities, regions, etc.) permitting mobile devices to remain connected with a Mobile Service Network (hereinafter "MSN") and/or the Internet while the devices move within the coverage area.

WLAN's were designed as a wireless extension of a Local Area Network (hereinafter "LAN") of an enterprise so that fixed-line-connected equipment (e.g. computers, fax machines, etc.) can wirelessly access an Enterprise Service Network (hereinafter "ESN") and the Internet, while the equipment is within the enterprise environment. For purposes of clarity, an enterprise network with a WLAN extension is defined as a Fixed Wireless Data Network (hereinafter "FWDN").

FIG. **1** illustrates a prior art implementation of the interconnection between an MWDN and an FWDN. Both the MWDN **220** and the FWDN **120** are independent from a network deployment and operation point-of-view, although the Radio Frequency (hereinafter "RF") coverage of the MWDN **220** and the FWDN **120** may overlap in their service areas. In other words, the MWDN **220** and the FWDN **120** are two different layers of physical networks, and thus are operationally independent from each other. The RF interface of the MWDN **220** uses a licensed spectrum, while the RF interface of the FWDN **120** uses an unlicensed spectrum.

The MWDN **220** further comprises at least a Mobile Network Gateway (hereinafter "MNG") **224**, a Wide Area Network (hereinafter "WAN") **225**, and one or more Base Stations (hereinafter "BS") **226**. An MD **221** connects to a BS **226** via an RF interface **223**. The wireless carrier's MSN **201** connects with the WAN **225** via the MNG **224** over a Backbone Network Link (hereinafter "BNL") **251** to provide mobile data services to the MD **221**. The WAN **225** connects with the Internet **901** via the MNG **224** and BNL **252** to provide Internet access to the MD **221**. The FWDN **120** comprises at least a Firewall Router (hereinafter "FWR") **124**, a LAN **125**, and one or more WLAN Access Points (hereinafter "AP") **126**. A computer **121** connects to the AP **126** via an RF interface **122**. The enterprise's ESN **101** connects with the LAN **125** via the BNL **151** to provide enterprise data services to the computer **121**. The FWR **124** connects with the Internet **901** via the BNL **152** to provide Internet access to the computer **121**. Both the WAN **225** and the LAN **125** further comprise additional Network Elements (hereinafter "NE") providing various services and functions. From a user data service point-of-view, the MWDN **220** and the FWDN **120** work in different ways. For example, the MWDN **220** employs Internet Protocol (hereinafter "IP") tunneling technologies, whereas the FWDN **120** employs IP routing.

Within the MWDN **220**, the MNG **224** is the anchor point for data service connections with the MD **221**. In other words, the MD **121** relies on the MNG **224** to reach the MSN **201** for private services and the Internet for public services. It is understood to one skilled in the art that MD **221** may refer to one or more devices. The MNG **224** assigns and manages the IP address of the MD **221**. One or more IP tunnels are built between the MNG **224** and the MD **221** to provide point-to-point IP connections, while the BS **226** provides the RF connectivity. When the MD **221** travels within the MWDN **220**, the IP tunnel switches from one BS to another BS without losing anchoring to the MNG **224**. The MNG **224** can also serve as a firewall to the Internet and may use Network Address Port Translation (hereinafter "NAPT") technology to hide the MD's **221** private IP address from public networks (e.g., Internet). This further improves data security against hackers from the Internet.

Within the FWDN **120**, the FWR **124** and the AP **126** act as routers with different functions. The LAN **125** operates with Ethernet. The RF interface between the AP **126** and user devices, such as a computer **121**, is a wireless extension of the Ethernet LAN **125**. The Computer **121** acquires IP addresses from the ESN **101**. The FWR **124** and the AP **126** decide how to route user data (e.g., computer data) to and from external networks (e.g., Internet) based on the user device's IP address. The Computer **121** obtains data services from the ESN **101** without involvement from the FWR **124**. The FWR **124** uses NAPT technology to hide the private IP address of the computer **121** from the Internet and improves data security against hackers from the Internet.

The MWDN **220** and the FWDN **120** have been independent from a user data connection point-of-view until the introduction of Smart Mobile Devices (hereinafter "SMD").

FIG. **2**A illustrates an embodiment of a network deployment model used by most wireless carriers and enterprises to provide wireless data services to SMD(s) as the current state of the art. In this model, the MWDN **220** works independent from the FWDN **120**. However, the same SMD **140** can appear at, for example, location **240**, in MWDN **220** or location **242** in FWDN **120** at different times due to mobility of the SMD. Both networks have the capability to authenticate the SMD **140** and grant the device the right of access to the networks, respectively or simultaneously, depending on the RF conditions that the SMD **140** experiences. Therefore, the two networks provide the SMD **140** with access to the MSN **201**, the Internet **901**, and the ESN **101** depending on the location of the SMD **140**.

In one embodiment, the SMD **140** is a multi-functional mobile device having at least one RF interface to the MWDN **220** and at least one RF interface to the FWDN **120**. The SMD **140** supports a number of software applications useful for multi-tasking of functions and services on the SMD. One skilled in the art can appreciate that an SMD includes, but is not limited to, smart phones, tablet computers, netbooks, eReaders, or any other mobile device capable of communication with both an FWDN and an MWDN.

The SMD **140** can access both the MSN **201** and the Internet **901**, through the RF interface **223**, when the SMD **140** travels within the RF coverage of the MWDN **220** (e.g., location **240**). In this case, the SMD **140** uses the IP tunnel **211** to reach the MNG **224** which, in turn, communicates with the MSN **201** via the BNL **251** for mobile data services and with the Internet **901** via the BNL **252** for mobile internet access.

In another embodiment, when the SMD **140** moves into location **242**, the SMD **140** uses both the RF interface **223**A and the RF interface **122** to access the MSN **201** and the Internet **901**. In such a scenario, the SMD **140** is within an overlapped RF coverage area between both the MWDN **220** and the FWDN **120**. In this case, the SMD **140** at location **242** uses the IP tunnel **212** to receive mobile data services provided by the MSN **201** (via the MNG **224** and the BNL **251**.) The SMD's **140** access to the Internet **901** is received through the IP route **111** provided by the AP **126**, the LAN **125** and the FWR **124**.

FIG. **2**B illustrates an alternative embodiment of a network deployment model used by most wireless carriers and enterprises as the current state of the art. This embodiment illustrates an example of user data connections when the RF coverage of the MWDN **220** does not overlap with the RF coverage of the FWDN **120**, for example the basement of an office building in the FWDN. In this case, when an SMD **140** travels within the MWDN **220** (e.g., Location **240**), the SMD **140** accesses the MSN **201** and the Internet **901** via an IP tunnel **211** established between the MNG **224** and the SMD **140** over the BS **226** and the WAN **225**. After the SMD **140** travels into the FWDN **120** and stays at a location where only the RF coverage of FWDN **120** exists, for example location **243** in the illustration of this figure, the SMD **140** loses IP tunnel connection **221** with the MSG **224** and, consequently loses the ongoing mobile data services from the MSN **201** and the Internet **901**, due to the loss of RF connection between the MWDN **220** and the SMD **140** at Location **243**. In order to re-gain the mobile data connections, the SMD **140** at Location **243** uses the FWDN **120** to access the Internet **901** through the FWDN **120** via a new IP route **111**. However, the FWDN **120** cannot connect directly to the MSN **201**. Therefore, the SMD **140** cannot access the MSN **201** through the FWDN **120** for the mobile data services offered by the MWDN operator. This becomes an issue if 1) the RF coverage of the MWDN **220** does not overlap with the RF coverage of the FWDN **120**; or 2) the SMD **140** automatically shuts down its RF interface to the MWDN **220** when the SMD **140** connected with the FWDN **120** (e.g., RF interface **122**) due to any design considerations.

An exemplary solution to the problem is to introduce a security gateway (hereinafter "SeGW") into the MWDN. As such, FIG. **3** illustrates an embodiment of a network architecture where an MWDN **220** and an FWDN **120** are bridged through a SeGW **302** to provide mobile data service over the FWDN **120**. In this architecture, the SeGW **302** serves as an end point of an IP security (hereinafter "IPsec") tunnel **218**. The IPsec tunnel **218** interconnects the SeGW **302** to the SMD **140** while traveling within the coverage area of the FWDN **120** (e.g., Location **244**). The interconnection further travels through the FWDN **120** and the Internet **901** (via the BNL **152** and the BNL **153**.) After the IPsec tunnel **218** is established, the SeGW **302** launches an IP tunnel **219** to the MNG **224**. The cascaded IPsec tunnel **218** and IP tunnel **219** allow the MNG **224** to serve as the sole gateway between the SMD **140** and both the Internet **901** (via the BNL **252**) and the MSN **201** (via the BNL **251**).

In this embodiment, the MNG **224** assigns and manages the SMDs **140** IP addresses for access to both the Internet **901** and the MSN **210** (whether connecting via the MWDN **220** or the FWDN **120**.) When the SMD **140** travels between each of the two data networks, the MNG **224** switches the IP tunnels between the SMD **140** and the MNG **224** without changing the SMDs **140** IP addresses whether the SMD **140** travels into Location **240** or Location **244**. Thus, the SMDs **140** mobility is hidden from the MSN **201**. Therefore, the SMD **140** maintains IP session continuity with the MSN **201** and/or the Internet **901**. In one embodiment, the mobile traffic includes the network control-plane (signaling data), which is highly sensitive data. Therefore, the control-plane should be protected against potential security threats from the Internet **901**. The purpose of the IPsec **218** is to protect against such threats.

The MWDN and the FWDN are standardized by multiple international standards bodies such as:

- The Third Generation Partnership Project (hereinafter "3GPP") is a European telecommunication standards body within the European Telecommunications Standards Institute (hereinafter "ETSI"). 3GPP has led the development of mobile communication standards targeted at international markets. The first data-only mobile network is called the 3GPP Long Term Evolution (hereinafter "LTE"), initially released in 3GPP Release 8. LTE has been well accepted by mobile operators throughout the world and has been commercially deployed in the U.S. and other countries.
- The Institute of Electrical and Electronics Engineering (hereinafter "IEEE") is an international professional association, which has led the development of WLAN communication standards. The well accepted IEEE 802.11 WLAN standard has led to Wi-Fi networks throughout the world. In much of the world, the terms Wi-Fi, WLAN, and IEEE 802.11 have become synonymous with each other.

FIG. **4**A illustrates an embodiment of a 3GPP LTE-based MWDN interworked with an IEEE WLAN-based FWDN. The LTE **220** network consists of at least an Evolved Node Bs (hereinafter "eNB") **226**A, a Servicing Gateway (hereinafter "S-GW") **412**, a Packet Data Network Gateway (hereinafter "P-GW") **202**A, a Mobility Management Entity (hereinafter "MME") **411** and mobile equipment (hereinafter "UE") **140**A. To provide interworking with a WLAN **120**, the 3GPP LTE **220** network architecture includes an Evolved Packet Data Gateway (hereinafter "ePDG") **302**A. In order to simplify references to network elements, the 3GPP has defined a name for each interface between a pair of network elements. For example, the interface between the P-GW **202**A and the ePDG **302**A is S2b, the interface between the eNB **226**A and the MME **411** is S1-MME, etc. Each interface comprises the control-plane (the network signaling data) and/or user-plane (the subscriber data) depending on the nature of the interface.

A UE is an SMD or mobile station such as a smartphone. The UE **140**A provides mobile data services to a user according to the service contract signed with a Public Land Mobile Network (hereinafter "PLMN") operator, i.e. wireless carrier. The UE **140**A has a radio receiver and transmitter for communications with the PLMN. The UE **140**A usually includes multiple radio receivers and transmitters in order to support multiple mobile air interface standards. Such standards include the LTE-Uu interface for LTE access and the IEEE 802.11 (i.e., Wi-Fi) interface for non-3GPP (WLAN) access.

The eNB **226**A is the BS that provides air interface LTE-Uu to the UE **140**A. The eNB **226**A also communicates with both the MME **411** over the S1-MME interface and the S-GW **412** over the S1-U interface. The LTE-Uu passes both the user-

plane and the control-plane between the UE **140**A and the eNB **226**A. The eNB **226**A and the UE **140**A use data encryption to cipher data traveling through the LTE-Uu. On the network side, only Non-Access Stratum Messages (hereinafter "NAS") (i.e. the control-plane) exchanged over the S1-MME interface are encrypted. The user-plane exchanged over the S1-U interface is unencrypted. The S1-MME interface only carries the control-plane information while the S1-U interface only carries the user-plane information.

The S-GW **412** tunnels the UE **140**A user-plane data from the eNB **226**A to the P-GW **202**A. The S-GW **412** also acts as a UE mobility anchor point. The S-GW **412** communicates with eNB **226**A over the S1-U interface. The S1-U interface utilizes a "GPRS Tunneling Protocol-User-Plane" (hereinafter "GTP-U"). GPRS stands for Generic Packet Radio Service, which was standardized by the ETSI as the legacy Second Generation (hereinafter "2G") mobile network technology. The S-GW **412** switches the GTP-U tunnel from one eNB to the other in order to maintain an uninterrupted data connection with the UE **140**A when the UE **140**A performs an inter-eNB handover. The S-GW **412** communicates with the P-GW **202**A over the S5 interface, which consists of both a user-plane and a control-plane. The S5 interface utilizes the GTP-U protocol for its user-plane, while utilizing a "GPRS Tunneling Protocol-Control-Plane" (hereinafter "GTP-C") for its control-plane. The S-GW **412** also acts as the anchor point for other 3GPP network elements, such as a Serving GPRS Support Node, in order to communicate with other 3GPP networks.

The P-GW **202**A is the MNG that provides connectivity between the UE **140**A and an external Packet Data Network (hereinafter "PDN"), such as 1) the MSN **201** of the wireless carrier or 2) the Internet **901**. The UE **140**A may connect to multiple PDNs through the same P-GW **202**A. Each PDN can be identified by an Access Point Name (hereinafter "APN"). The P-GW **202**A acts as the GTP-U tunnel termination point for the delivery of the UE **140**A user traffic. The P-GW **202**A also manages the IP address of the UE **140**A data connection to a PDN. The UE's **140**A IP address may come out of an IP Address Pool held by either the P-GW **202**A or the PDN. The P-GW **202**A performs policy enforcement, packet filtering, charging support, and lawful interception. It is often customary for the MSN **210** to be located within a PLMN.

The MME **411** provides mobility management for any UE connections in the LTE network **220**. The MME **411** communicates with the eNB over the S1-MME interface. Further, the MME **411** communicates with the S-GW **412** over the S11 interface. Both interfaces belong to the LTE network control-plane. The MME **411** maintains a database of mobile location tracking information as a means of limiting the MME's **412** paging area. When the UE **140**A moves from one cell to another, the cell tower's identification and the tracking area's identification are recorded into the database. The MME **411** is responsible for choosing the S-GW **412** for the UE **140**A at both the initial attachments as well as during the inter S-GW handover. The MME **411** interfaces with a Home Registration Sub-System (hereinafter "HSS") **413** over the S6a interface. The HSS **413** maintains the UE **140**A identification information, access authentication and encryption keys.

The HSS **413** is a database of UE subscription information. Similar subscription information is maintained in a Subscriber Identification Module (hereinafter "SIM") residing inside the UE. Both the HSS **413** and the SIM (not shown) have the same root encryption key for user identification, service authentication and user data encryption.

The ePDG **302**A is the SeGW that provides LTE and non-3GPP network inter-connections. The ePDG **302**A communicates with the P-GW **202**A over the S2b interface. Further, the ePDG **302**A communicates with a "3GPP Authentication, Authorization and Accounting" (hereinafter "3GPP AAA") **525** server over the SWm interface. As the SeGW, the ePDG **302**A provides termination of the IPsec tunnel built between the UE **140**A and the ePDG **302**A through the FWDN **120** over the SWn interface when the UE **140**A travels into the RF coverage of the FWDN **120**. The P-GW **202**A serves as the anchor point for the point-to-point IP connectivity between the UE **140**A and the P-GW **202**A. The P-GW **202**A serves as the anchor point whether the UE **140**A is connected: 1) to the P-GW **202**A over the LTE-Uu air interface of the LTE network; or 2) the Wi-Fi air interface of the FWDN **120**.

The 3GPP AAA **525** server is designed to interface with the ePDG **302**A, over the SWm interface, as a means of providing Authentication, Authorization and Accounting (hereinafter "AAA") services to the UE **140**A in order to establish the SWn interface (e.g., IPsec tunnel). The 3GPP AAA **525** server exchanges user profile information with the HSS **413** over the SWx interface. This exchange ensures that the AAA service can be provided under the same user profile, stored in the HSS **413**, no matter which network the UE **140**A connects.

As illustrated in FIG. **4**A, when the UE **140**A moves from the LTE-based MWDN **220** to the WLAN-based FWDN **120**, but before it connects with the P-GW **202**A over the S2b interface, the UE **140**A has to build the SWn connection with the ePDG **302**A. As an exemplary embodiment, and according to 3GPP standards, a process of building the SWn connection is described as follows:

1. The UE **140**A gains access to the FWDN **120**, (i.e. enters the Wi-Fi access network and acquires a local IP address from an ESN **101**) assuming the UE **140**A has permission and has been locally authenticated (i.e. by the enterprise network.)
2. The UE **140**A acquires the ePDG's **302**A IP address through the FWDN **120**. Alternatively, the IP address is pre-programmed into the UE **140**A. Knowledge of the IP address allows the UE **140**A access to the ePDG **302**A from the FWDN **120**. The UE **140**A contacts the ePDG **302**A, through a FWR **124** of the FWDN **120**, by using an "Internet Key Exchange Protocol—Version 2" (hereinafter "IKEv2") protocol for non-3GPP access authentication.
3. After the IKEv2 authentication request is received, the ePDG **302**A reaches the 3GPP AAA **525** server over the SWm interface.
4. The 3GPP AAA **525** server uses an "Extensible Authentication Protocol-Authentication and Key Agreement" (hereinafter "EAP-AKA") and the user profile information, obtained from the HSS **413** over the SWx interface, to perform mutual authentication with the UE **140**A.
5. Next, both the ePDG **302**A and the UE **140**A obtain valid encryption keys to build a secure association between them. Finally the IPsec tunnel is built as a part of the SWn interface. The tunnel goes through the AP **126**, the LAN **125**, and the FWR **124** all from within the FWDN **120**. The tunnel is used to deliver both the user-plane and control-plane data between the UE **140**A and the MWDN **220**.

FIG. **4**B illustrates an embodiment of a representative LTE network as an interface to an ePDG. The LTE network **402** at least comprises a P-GW **411**, an S-GW **412**, an HSS **413**, an MME **414**, and an eNB **415**. External to the LTE Network **402** is an ePDG **302**A, a 3GPP AAA **525** Server, a UE **140**A, a PDN **401**, and the Internet **901**. The LTE Network **402** further comprises a plurality of interfaces connecting the internal

and/or external components (e.g., SGi, S5, S11, S1U, S1-MME, S6a, SWx, S2b, LTE-Uu, etc.) The LTE is a data-only mobile network providing packet data services to mobile devices. Each interface may carry control-plane and/or user-plane depending on the specifications from the 3GPP standards. For example, the S2b interface carries both the control-plane and the user-plane information. The S6a interface only carries the control-plane data. The S5 interface transports both the control-plane and the user-plane data. Like the S2b interface, the control-plane of the S5 interface uses GTP-C while its user-plane complies with the GTP-U protocol. The P-GW **411** and the S-GW **412** use the control-plane (in GTP-C) to exchange signaling information in order to set up the user-plane (in GTP-U) of the S5 interface.

Each interface used for connecting a pair of network elements has a name defined by the standards. An instance of a network interface implies a copy of a defined interface which has all the features and capability of the original interface standard. For example, an instance of the S5 interface is a copy of the 3GPP standard S5 interface defined for a given pair of P-GW **411** and S-GW **412** network elements.

FIG. **4**B further illustrates an embodiment of an S2b interface as defined by the 3GPP. The S2b interface **430** consists of the control-plane and the user-plane. The control-plane uses the GTP-C protocol while the user-plane uses the GTP-U protocol. After the SWn connection is built, the ePDG **302**A reaches out to the P-GW **411** over the control-plane (GTP-C) of the S2b interface to set up the user-plane context. The ePDG **302**A further constructs the GTP-U tunnel to transport the network user-plane data between the ePDG **302**A and the P-GW **411**. According to the 3GPP standards, GTP-U and GTP-C tunnels can be transported on top of any IP connections using a User Datagram Protocol (hereinafter "UDP"), which is one of the core members of the Internet Protocol (IP) Suite used by the Internet **901**. L1 standards for the physical layer of a network interface. L2 standards for the data link layer of the network interface. The main function of the L2 is to facilitate the interconnection between the IP layer and the physical layer (L1) of the network interface.

FIG. **4**C further illustrates an embodiment of an MWDN and an FWDN and IP tunnel connections connecting one or more of the network elements. The MWDN **220**, which is an LTE-based network, comprises a plurality of components such as a P-GW **202**A, an S-GW **412**, an eNB **226**A, and an ePDG **302**A. The FWDN **120**, which is a WLAN-based network, comprises a plurality of components such as an FWR **124**, an AP **126**, and an LAN **125**. External to both networks is an UE **140**A, an MSN **201** and the Internet **901**. The UE **140**A can travel between the MWDN **220** and the FWDN **120**, and can connect with one or both of the networks over LTE-Uu interface and/or Wi-Fi interface depending on the location of the UE between the networks and the availability of the LTE-Uu and Wi-Fi interfaces.

Further, a plurality of interfaces connects each of the internal and external network elements together. There is also an IP tunnel **417** between the UE **140**A and the P-GW **202**A, via the S-GW (S5 interface), and an IP tunnel **418** via the ePDG (S2b interface cascaded with the SWn interface). The P-GW **202**A switches or maintains both the S5 and S2b interfaces for the IP connections between the P-GW **202**A and the UE **140**A to allow for IP session continuity as the UE **140**A moves between the MWDN **220** and the FWDN **120**. Depending on the capability of the UE **140**A and the RF coverage of the MWDN **220** and the FWDN **120**, the P-GW **202**A may use one or both of the IP tunnels to provide services to the UE **140**A.

The 3GPP standards define two variations of protocol stacks for both the S5 and S2b interface. The first variation uses GTP, as illustrated in FIG. **4**B. The second variation uses a "Proxy Mobile IP Protocol—Version 6" stack (hereinafter "PMIPv6") or dual stacks PMIPv4/v6 (hereinafter "DSMIPv6"), developed by the Internet Engineering Task Force (hereinafter "IETF"). The PMIPv6 or DSMIPv6 is intended for trusted non-3GPP network interworking, e.g. CDMA2000 EV-DO (Code Division Multiple Access 2000 Evolution, Data Only) networks. For untrusted non-3GPP interworking (e.g. WLAN Wi-Fi networks), the choice of the S2b interface protocol is determined by the infrastructure of the LTE network. For the sake of clarity of description hereafter, GTP is chosen as an example.

The standardized LTE/non-3GPP interworking architecture may provide IP session continuity whether a UE is connected with a P-GW over the LTE-based MWDN or the WLAN-based FWDN. However, there are several shortcomings such as:

1. It is not always be possible for an FWR to allow pass-through of an IPsec tunnel, within an SWn interface, from a UE to an ePDG. This assumes the FWR is resident in an FWDN and the ePDG is resident in an MWDN. For example, in an enterprise environment, the FWR is a part of the corporate security gateway system. The general IT policy of an enterprise may not allow IPsec tunneling through a corporate firewall, out of a computer, to outside networks such as the Internet. Such IT policies would also disallow such tunneling from a mobile device within the enterprise campus (e.g., WLAN). In this case, establishment of a SWn connection between a mobile device and an ePDG becomes impossible. Therefore, the interworking between the LTE and the WLAN networks becomes hindered.
2. When a mobile device is behind an enterprise FWR (i.e., connected with the enterprise WLAN) the IT manager of the FWDN may not have control over the MWDN connection of the mobile device while inside the enterprise. For example, the mobile device's connection **417** to the Internet, via the LTE network MWDN **220** through the BNL **252**, bypasses the corporate FWR **124** thus providing an unprotected backdoor from the Internet **901** into the corporate enterprise LAN **125** through the mobile device UE **140**A even though the corporation LAN **125** is protected by the FWR **124** for the internet access over the BNL **152**.
3. A dual-access (e.g., LTE and Wi-Fi) tablet or laptop computer with access to external networks from within a LAN environment creates inconsistent IT management policy and/or policy enforcement. For example, the FWR **124** of the LAN **125** may impose content filtering on the traffic from the device to/from the Internet to comply with corporate IT policy and/or government regulations. Compliance will break if the device accesses the Internet through the LTE-Uu interface and the IP connection **417** of the MWDN **220** rather than through corporate Wi-Fi connection of the FWDN **120**.
4. A possible solution to the above problem is to force the mobile device to disengage the IP tunnel **417** between the device and the P-GW over the LTE-Uu interface as soon as the device enters the FWDN. Consequently, the device is forced to take only the FWDN-ePDG-P-GW route (e.g., IP tunnel **418**) for Internet access. The downside to this approach is reliance that the device or the user will take the expected action. Additionally, MWDN bandwidth is wasted delivering Internet-bound device

traffic, and the UE **140**A may lose the capability to directly access ESN **101** for enterprise IT services simultaneously.

5. Another potential solution to the above problem is to allow the device Internet access as usual by sending the connection through the FWDN without relying on an ePDG. For example, the UE **140**A accesses the Internet through the corporate firewall FWR **124** and the BNL **152** like any corporate computer does. While this approach may save MWDN bandwidth, the MWDN operator loses traffic routing management capability. Such management capabilities allow for potential content-based value-added services (e.g., mobile behavior analytics, etc.)
6. If the P-GW acts as an anchor point for all IP traffic flowing from a mobile device, the device must use an IPsec tunnel (e.g., SWn interface) for mobile data security and 3GPP standards compliance. Given the large number of mobile devices within an enterprise campus, costs of the IPsec tunnel on the FWDN must be considered. Consequently, both the MWDN operator and the FWDN owner (the enterprise) expect increased costs due to the overhead introduced by the SWn interface as described above.

The present invention provides one or more solutions to the above-described shortcomings of the 3GPP standardized MWDN-FWDN interconnections.

SUMMARY

Embodiments presently disclosed generally relate to mobile data communications and services. More specifically, embodiments herein relate to managing and administering mobile data services over a WLAN within an enterprise network.

In one embodiment, a method and a computer readable medium for providing mobile data service to a mobile device over a Fixed Wireless Data Network (FWDN) are described. The method comprises a Mobile Wireless Data Network (MWDN) is coupled with the FWDN via an IP Transport Network (IPTN). Next, a mobile data service request is received from a mobile device, wherein the request is relayed from the FWDN. Next, the authenticity of the mobile data service request is verified by the MWDN. Next, the mobile data service is delivered to the mobile device, via the FWDN, wherein the mobile device transparently communicates with the MWDN through the FWDN.

Additionally, a first control-plane data is received from the MWDN, wherein the first control-plane data comprises configuration and management instructions. A user-plane data and a second control-plane data, associated with the mobile data service request, are received. Next, the user-plane data and the second control-plane data are extracted from a single data stream. Further, a third control-plane data is transmitted to the MWDN over a first trusted IPTN, wherein the third control-plane data is derived from the second control-plane data. The third control-plane data requests routing instructions for the user-plane data. Next, a fourth control-plane data is received from the MWDN over the first trusted IPTN, wherein the fourth control-plane data provides routing instructions for the user-plane data. Upon receipt of the fourth control-plane data, a determination is made as to whether the user-plane data will be communicated to the MWDN over an untrusted network, a trusted network, or directly without a transport network.

Additionally, upon receipt of routing instructions from the fourth control-plane data, the user-plane data is transmitted to the MWDN over an untrusted network through a firewall positioned between the FWDN and the MWDN. The user-plane data is unencrypted at an IP layer of the transport network and thus passes through the firewall, wherein a transport layer of the user-plane data uses an IP protocol type that is accepted by the firewall wherein the firewall will not block the user-plane data from delivery.

In another embodiment, a system for providing mobile data service within a Fixed Wireless Data Network (FWDN) is described. The system comprises an enterprise network having a Wireless Local Area Network (WLAN), wherein the enterprise network is a part of the FWDN. The system further comprises an enterprise Mobile Access Controller (eMAC) coupled between the enterprise network and a Mobile Wireless Data Network (MWDN), wherein the eMAC is configured to provide IP connections to both the enterprise network and one or more mobile devices coupled to the WLAN. The eMAC is further coupled, via a first IPTN, to an enterprise Mobile Signaling Gateway (eMSG) resident in the MWDN. Additionally, the eMAC is coupled, via a second IPTN, to an enterprise Mobile User-plane Aggregator (eMUA) resident in the MWDN, wherein the eMUA is configured to provide IP connections to the MWDN. The eMAC is further configured to receive a first control-plane data from the eMSG, via the first IPTN, wherein the first control-plane data at least provides configuration and management instructions to the eMAC.

Additionally, the eMAC is further configured to establish a third IP tunnel to a first mobile device upon confirmation from the MWDN, that first mobile device is authorized to access the eMAC. The third IP tunnel carries both a second control-plane data and a user-plane data of the first mobile device. The eMAC is further configured to receive and separate the second control-plane data and the user-plane data from the third IP tunnel. The eMAC further establishes a first IP tunnel across the first IPTN and bilaterally communicate with the eMSG. The eMAC further transmits a third control-plane data, derived from the second control-plane data, to the eMSG, via the first IP tunnel. The third control-plane data requests routing instructions for the user-plane data. The eMAC also establishes a second IP tunnel across the second IPTN based on routing instructions received, via the first IP tunnel, from the eMSG. Lastly, the eMAC bilaterally communicates the user-plane data to the eMUA over the second IP tunnel.

BRIEF DESCRIPTION OF THE DRAWINGS

FIG. **1** illustrates a prior art implementation of the interconnection between an MWDN and an FWDN

FIG. **2**A illustrates a prior art embodiment of a network deployment model used by most wireless carriers and enterprises.

FIG. **2**B illustrates an alternative prior art embodiment of a network deployment model used by most wireless carriers and enterprises.

FIG. **3** illustrates a prior art embodiment of a network architecture where an MWDN and an FWDN are bridged through an SeGW to provide mobile data service over the FWDN.

FIG. **4**A illustrates a prior art embodiment of a 3GPP LTE-based MWDN interworked with an IEEE WLAN-based FWDN.

FIG. **4**B illustrates a prior art embodiment of a representative LTE network and an interface to an ePDG.

FIG. **4**C illustrates a prior art embodiment of an MWDN and an FWDN and IP tunnel connections connecting one or more network elements.

FIG. **5**A illustrates an embodiment of a network architecture and a plurality of communication flows between various components within the architecture.

FIG. **5**B illustrates another embodiment of a network architecture and a plurality of communication flows between various components within the architecture

FIG. **6**A illustrates an embodiment of a network architecture of an eMLAN.

FIG. **6**B illustrates another embodiment of network architecture of an eMLAN.

FIG. **6**C illustrates another embodiment of network architecture of an eMLAN.

FIG. **6**D illustrates another embodiment of network architecture of an eMLAN.

FIG. **6**E illustrates another embodiment of network architecture of an eMLAN.

FIG. **7** illustrates an embodiment of network architecture of an eMLAN.

FIG. **8**A illustrates a flow diagram of a method for authenticating and network load balancing a mobile data service over a WLAN.

FIG. **8**B illustrates a flow diagram describing one embodiment for exchanging message processes, initiated by a mobile device, between an eMAC and an eMUA to establish the user-plane over a public (untrusted) IP transport network.

FIG. **8**C illustrates a flow diagram describing another embodiment for exchanging message processes, initiated by a mobile network, between an eMAC and an eMUA to establish the user-plane over a public (untrusted) IP transport network.

FIG. **9** illustrates a flow diagram describing one embodiment for providing mobile data service, initiated by a mobile device, to a mobile device over an FWDN.

FIG. **10** illustrates a flow diagram describing another embodiment for providing mobile data service, initiated by a PLMN, to a mobile device over an FWDN.

FIG. **11** illustrates an embodiment of a computer system configured to host and/or execute one or more components described herein.

FIG. **12** illustrates an embodiment of the generic architecture of a data network platform that is used as the hardware platform of an eMUA.

DETAILED DESCRIPTION

Definition of Frequently Used Terms

A network element (NE) is a physical entity of a communication network and provides at least a set of network functions defined by telecommunication standards. An NE may have multiple pre-defined interfaces to inter-connect with other NE's to form a communication network. Each interface may deliver user-plane and/or control-plane protocol data according to the network standards applied.

An NE at the edge of a network, or an edge NE, is a gateway that is employed as a communicative conjunction to interconnect with other NE's inside the network and other NE's outside the network.

eMLAN stands for enterprise Mobile Local Area Network. An eMLAN comprises one or more enterprise Mobile User-Plane Aggregators (eMUA), one or more enterprise Mobile Access Controllers (eMAC) and one or more enterprise Mobile Signaling Gateway (eMSG). eMUA and eMSG are edge NE(s) of the MWDN **220** included in the present invention. eMAC is an edge NE of the FWDN **120** included in the present invention.

3GPP stands for the 3rd Generation Partnership Project, which is a European standards body under the European Telecommunications Standards Institute (hereinafter "ETSI").

3GPP LTE network is the Long Term Evolution (LTE) network standardized by the 3GPP.

GPRS stands for General Packet Radio Services, which is the legacy 2nd generation mobile communication system standardized by the 3GPP.

GTP stands for GPRS Tunneling Protocol standardized by the 3GPP. GTP is a broad term having multiple variations (e.g. GTP-C, GTP-U, etc.)

GTP-U stands for GPRS Tunneling Protocol for the User-plane. GTP-U is a variation of the GTP.

GTP-C stands for GPRS Tunneling Protocol for the Control-plane. GTP-C is a variation of the GTP.

MSN stands for Mobile Service Network.

A Packet Data Network (PDN) is an MSN providing packet data services to mobile devices.

3GPP AAA is a network entity defined and standardized by the 3GPP for authentication, authorization and accounting (AAA) services to mobile devices.

ePDG stands for Evolved Packet Data Gateway, which is standardized by the 3GPP for the LTE and non-3GPP network interworking.

FIG. **5**A illustrates an embodiment of a network architecture and a plurality of communication flows between various components within the architecture. The network architecture **500** comprises an MWDN **220** in communication with an FWDN **120** through an Enterprise Mobile LAN (hereinafter "eMLAN") **600**. The eMLAN **600** is shown in dashed-line area of FIG. **5**. The eMLAN **600** comprises one or more Enterprise Mobile Access Controllers (hereinafter "eMAC") **501**, one or more Enterprise Mobile User-Plane Aggregators (hereinafter "eMUA") **511**, and one or more Enterprise Mobile Signaling Gateways (hereinafter "eMSG") **510**. In one embodiment, the eMSG **510** and the eMUA **511** reside within the MWDN **220**. Whereas, the eMAC **501** resides within the FWDN **120**. The eMUA **511** and the eMAC **501** may communicate with each other over an interface **515** (hereinafter "I515") and/or an interface **514** (hereinafter "I514") for exchanging user-plane data between the MWDN **220** and the FWDN **120**. The eMSG **510** and the eMAC **501** may communicate with each other over an interface **513** (hereinafter "I513") for exchanging control-plane data between the MWDN **220** and the FWDN **120**. The eMSG **510** communicates with the eMUA **511** over the interface **512** (hereinafter "I512") for exchanging control-plane data of the eMLAN **600**. The MWDN **220** further comprises a standard 3GPP AAA **525** server in communication with an LTE Network **402**. The LTE Network **402** provides service to a smart mobile device (hereinafter "UE") **240**A, over a standard LTE-Uu interface. In one embodiment, the eMUA **511** and the eMSG **510** are edge Network Elements (NE) of the MWDN **220**.

The eMUA **511** may communicate with the LTE Network **402** via a standard S5 interface. The eMSG **510** communicates with the 3GPP AAA **525** server via a 3GPP standard SWm interface. The standard 3GPP AAA **525** server communicates with the eMSG **510** via the SWm interface and communicates with the LTE Network **402** via the 3GPP standard SWx interface. The UE **240**A communicates with the LTE Network **402** via the LTE-Uu interface. The UE **240**A

receives service from a PDN **401** via a 3GPP standard SGi interface. The UE **240**A accesses the internet **901** using a 3GPP standard SGi interface.

In one embodiment, the FWDN **120** at least comprises the eMAC **501**, a LAN **125**, an FWR **124**, and a Wi-Fi Access Point (AP) **126**. The AP **126** communicates with a UE **140**A via an IEEE 802.11 standard Wi-Fi interface. In one embodiment, the eMAC **501** is an edge NE of the FWDN **120**. The eMAC **501** communicates with the eMSG **510** via the I513. The eMAC **510** also communicates with the additional NE's within the FWDN **120** over the LAN **125** (e.g. the FWR **124** and the AP **126**.) The eMAC **501** further communicates with an ESN **101** via a BNL **151** interface (hereinafter "I151").

In one embodiment, the eMUA **511** may access a public PDN, such as the Internet **901**, via an IP interface **252**A. The eMUA **511** may have a public IP address over the interface **252**A since there is no NAPT NE employed on this interface. The eMAC **501** may access a public PDN, such as the Internet **901**, via an IP interface **152** through the FWR **124**. The FWR **124** may employ NAPT technologies to hide the private IP address that the eMAC **501** acquired from the ESN **101** without losing the capability for the eMAC **501** to exchange IP data packets with the Internet **901**. The NAPT technology used by the FWR **124** also enhances the capability of the FWDN **120** to protect its NE's from hackers in the Internet **901**. The eMAC **501** and the eMUA **511** communicate with each other via the I515 interface, which complies with an IP tunneling protocol, such as the GTP-U protocol. In one embodiment the I515 interface traverses the FWR **124** and the internet **901**. The I515 interface is transparent to the FWR **124**, thus alleviating reconfiguration of the FWR's **124** settings, while the eMAC **501** is deployed within the enterprise environment.

In one embodiment, the I515 interface uses a 3GPP standard GTP-U protocol as the IP tunneling protocol as a means of exchanging data between the eMUA **511** and the eMAC **501**. The GTP-U tunneling protocol may also be used over the I514 interface between the eMUA **511** and the eMAC **501**. Communications between the eMAC **501** and the UE **140**A may use the 3GPP standard SWn interface over the Wi-Fi interface of the WLAN **125**. In one embodiment, communications between the eMAC **501** and the eMUA **511** may use the I515 and/or the I514 interfaces based on control messages issued by the eMSG **510** over the I513 interface.

In one embodiment, the eMAC **501** may be configured to provide functions of a 3GPP standard ePDG (not shown.) Such functionality may include establishing an instance of the SWn interface with the UE **140**A using an IKEv2/IPsec tunneling protocol. The eMAC **501** couples to an HSS (not shown) of the LTE Network **402** to authenticate establishment of the SWn interface instance. In an alternative embodiment, the eMAC **501** may use other tunneling protocol rather than defined by the 3GPP standard SWn interface to communicate with the UE **140**A as long as the UE **140**A has the capability to support the tunneling protocol. In any case, the connection between the eMAC **501** and the UE **140**A is authenticated by the 3GPP AAA **525** server based on the user profile data acquired from the HSS (not shown.)

In one embodiment, the UE **140**A, when in proximity of the FWDN **120**, wirelessly transmits/receives information with the FWDN **120** using the Wi-Fi interface. Proximity of the FWDN **120** means within communication range of the Wi-Fi interface of an AP within the FWDN **120**. In one embodiment, the AP **126** is configured to broadcast a Service Set Identifier (hereinafter "SSID") to announce the Wi-Fi interface's identity. The UE **140**A receives the SSID and compares it with a list of preferred SSIDs stored in its internal memory. If the SSID is part of a preferred list of SSIDs, the UE **140**A connects with the LAN **125**, via the AP **126**, after valid authentications are provided by the ESN **101**.

Once the UE **140**A authenticates with the LAN **125**, applications stored on the UE **140**A may establish one or more instances of the SWn interface in order to use services from the MWDN **220** and/or the FWDN **120**. The eMAC **501** relays authentication information from the UE **140**A application requests to the eMSG **510** via the I513 interface. The authentication requests are then passed to the 3GPP AAA **525** server via the SWm interface. The 3GPP AAA **525** server performs final authentication on the UE's **140**A application requests based on user profile data retrieved from the HSS (not shown) of the LTE Network **402**. If authentication is successful, the eMAC **501** establishes an instance of the SWn interface with the UE **140**A. A method of establishing the SWn interface between the UE **140**A and the eMAC **501** is further discussed below.

In one embodiment, the I513 interface does not involve NAPT technologies since the eMSG **510** and the eMAC **501** have direct visibility of the IP addresses of each other. Therefore, the eMSG **510** or the eMAC **501** may initiate an IP connection to reach the other without facing NAPT firewall issues. In one embodiment, the eMAC **501** obtains IP addresses from the MWDN **220** for the I513 and the I514 interfaces. The eMAC **501** may also obtain IP addresses from the FWDN **120** to receive local data access with the FWDN **120**. The IP addresses acquired from the MWDN **220** are private to the MWDN and the IP addresses acquired from the FWDN **120** are private to the FWDN.

In one embodiment, the SWn interface uses an IPsec tunnel to transport user-plane data to/from the UE **140**A. Encryption keys used by the IPsec tunnel are exchanged between the eMAC **501** and the UE **140**A via a standard IKEv2 protocol. As a means of avoiding a pin-hole with the FWR **124**, the following steps may be performed. First, the eMAC **501** extracts and encapsulates user-plane data from the SWn interface and forwards the data to the eMUA **511** via the GTP-U tunnel of the I515 and/or the I514 interfaces. The FWR **124** sees the GTP-U packets as standard legacy user data packets and allows the GTP-U packets to pass through without triggering a security alert. Such pass-through is allowed since the GTP-U tunnel runs on top of the standard internet User Datagram Protocol (hereinafter "UDP"). In one embodiment, the mobile device may be configured to establish two IPsec tunnels terminated at the eMAC. One IPsec tunnel carries one set of user-plane data, destined for the PDN **401**, for mobile data services provided by the wireless carrier. The second IPsec tunnel carries a second set of user-plane data, destined for an ESN **101**, for mobile data services provided by the enterprise. Since the two IPsec are independent, the UE **140**A can simultaneously access mobile data services provided by both the wireless carrier and the enterprise. Although the two IPsec tunnels terminate at the eMAC **501**, the two sets of the user-plane data (i.e., two SWn instances) are routed in different directions. The eMAC forwards the first set of user-plane data, extracted from the first SWn instance, to the PDN **401** via the interface **1515**. The eMAC **501** forwards the second set of user-plane data, extracted from the second SWn instance, to the ESN **101** via the LAN **125**.

In one embodiment, the eMSG **510** provides the control-plane information to both the eMUA **511** and the eMAC **501** in order to establish the GTP-U tunnel across the I515 and/or the I514 interfaces. The control-plane information at least comprise IP addresses for the eMUA **511** and a Tunnel End Identifier (hereinafter "TEID") for each of the GTP-U tunnels. In one embodiment, it may be beneficial to keep the

GTP-U tunnels across the I515 interface transparent to the NAPT function of the FWR **124**. To maintain tunnel transparency, the eMSG **510** manages establishment of the GTP-U. First, the eMAC **501** requests establishment of an IP tunnel to the eMUA **511**, wherein the request is made to the eMSG **510** via the I513. Next, the eMSG **510** provides (via the I513) the eMAC **501** with the IP address of the eMUA **511**. Then the eMAC **501** initiates the IP tunnel, using the eMUA's **511** IP address as the tunnel destination. After receiving IP packets from the eMAC **501** (via the FWR **124**), the eMUA **511** may use the source IP address and port of the UDP data packet (received from the FWR **124**) to communicate the user-plane data from the PDN **401** back to the eMAC **501**. This approach achieves NAPT traversal over the FWR **124** for bilateral communications between the UE **140**A and the PDN **401**. However, both the eMSG **511** and the eMAC **501** may use the TEID's, communicated by the eMSG **510**, to identify the IP tunnel that is established between the eMUA **511** and the eMAC **501**.

FIG. **5**B illustrates another embodiment of a network architecture and a plurality of communication flows between various components within the architecture. The network architecture **500** of FIG. **5**B maintains the same network elements and components as FIG. **5**A. However, the communication flows between the components differ. For clarity of description, a GTP tunneling protocol is used as an example for IP tunneling over the S5 interface in the following paragraphs. In this embodiment, the eMUA **511** of the eMLAN **600** is capable of communication with the LTE Network **402** via an instance of the S5 interface. In one embodiment, after a GTP-U instance of the S5 interface is established, the eMUA **511** connects the GTP-U tunnel of the S5 interface with the GTP-U tunnel of the I515 interface. Once this connection is established, the eMUA **511** may transport mobile data packets of the UE **140**A via the eMAC **501** to the LTE network **402**. This connection allows the LTE Network **402** to deliver LTE services (e.g., PDN **401**) to the UE **140**A, while the UE **140**A is within and connected with the FWDN **120**, without using an LTE-Uu interface of the MWDN **220**. Further, although the I515 interface is realized (over the BNL **252**A, the internet **901**, the BNL **152**, the FWR **124** and the LAN **125**), the I515 interface may be delivered over the I514. The choice of IP routes for the I515 is managed by the eMSG **510**, whose control messages are exchanged with the eMUA **511** via I512 and the eMAC **501** via the I513, respectively.

FIG. **6**A illustrates an embodiment of network architecture of an eMLAN. The eMLAN **600** comprises one or more eMAC's **501**, one or more eMUA's **511**, and one or more eMSG's **510**. The eMSG **510** and the eMUA **511** reside in an MWDN **220**, while the eMAC **501** resides in an FWDN **120**. The eMUA **511** couples (i.e., interfaces **252**A and **152**) to the eMAC **501** via an untrusted IP transport network (hereinafter "IPTN") **901** (e.g., the internet). Further, the eMUA **511** may couple (i.e., interfaces **514** and **602**) to the eMAC **501** via a trusted IPTN **601**. In one embodiment, the eMSG **510** couples (i.e., interfaces **513** and **602**) to the eMAC **501** via the trusted IPTN **601**. An FWR **124**, resident in the FWDN **120**, protects access to the connection **152** from the untrusted IPTN **901**.

In one embodiment, a trusted network may be defined as a network comprising a communication path between two or more network elements wherein data communicated between to the two or more network elements is not at risk of being intercepted and/or manipulated by unauthorized parties. Alternatively, an untrusted network may be defined as a network comprising two or more network elements wherein data communicated between the two or more network elements does not require authorization to access the data. In one embodiment, the Internet is an example of an untrusted network. In yet another embodiment, a firewall may be designed to block unauthorized access to a network while permitting authorized communications. In one embodiment, a firewall may be position between an enterprise network and the internet as a means of protecting the enterprise network from being hacked and/or against malicious attacks originating from the internet. The firewall is configured to filter out the data sent by attackers. The firewall may further use a network address and NAPT services to reduce the visibility of IP addresses and ports of network elements; as well as user devices, within the enterprise network, attempting to access the internet. In one embodiment, this is accomplished by opening a minimal number of IP addresses and ports towards the internet. The firewall further permits the network elements and user devices to share the limited number of IP addresses and port numbers for access to the internet.

FIG. **6**B illustrates another embodiment of network architecture of an eMLAN. The network element and components of FIG. **6**B provide for the same components as FIG. **6**A with varied transport networks. In the present embodiment, the eMUA **511** couples (i.e., interfaces **514**A and **602**A) to the eMAC **501** through a Trusted Wireless IPTN **601**A. The eMSG **510** couples (i.e., interfaces **513**A and **602**A) to the eMAC **501** via the IPTN **601**A. The connection **602**A is a trusted and secured interface. In one embodiment, the eMAC **501** communicates with the IPTN **601**A by using a standard compliant wireless data modem card (hereinafter "WDC").

The IPTN **601**A provides secure point-to-point IP connection between both the eMSG **510** and the eMAC **501** and between the eMUA **511** and the eMAC **501**. The secure wireless IP connection (e.g., interfaces **513**A, **514**A and **602**A) allows the eMSG **510** to bypass the FWR **124** and directly communicate with the eMAC **501**. In one embodiment, the eMSG **510** authenticates and establishes the secure wireless IP connections. In another embodiment, the WDC within the eMAC **501** is authenticated by the IPTN **601**A before the eMSG **510** establishes the secure connection **602**A. In another embodiment, the WDC is securely coupled, physically and electronically, to the eMAC **501**. For example, the WDC may physically reside within the eMAC **501**. In another embodiment, the eMSG **510** and the eMAC **501** may use an Extensible Authentication Protocol (hereinafter "EAP") and a digital certificate to mutually authenticate.

FIG. **6**C illustrates another embodiment of a network architecture of an eMLAN. In this embodiment, the eMLAN **600** comprises a 3GPP LTE Network **402** employed as part of a MWDN **220**. Further, a trusted wireless IPTN exists to provide IP connections between the MWDN **220** and the FWDN **120**. An eMUA exists as a combination of an S-GW **511**A and a GTP Firewall **511**B. The LTE Network **402** may also serve as the trusted wireless IP transport network for private connections between 1) the S-GW **511**A (serving as an eMUA) and the eMAC **501**; and 2) between the eMSG **510** and the eMAC **501**. The LTE Network **402** may assign different Access Point Names (hereinafter "APN") for the interfaces **513**B and **514**B. The eMAC **501** employs an LTE modem card (e.g., physical card) to obtain mobile broadband data service over an LTE air interface **602**B. The LTE modem card provides a secure over-the-air interface **602**B based on LTE specifications. In one embodiment, the LTE Network **402** may belong to the same wireless carrier who owns the LTE MWDN **220**. Common ownership allows for trust between the two entities.

FIG. **6**D illustrates another embodiment of a network architecture of an eMLAN. In this embodiment, the eMLAN **600** comprises a Universal Mobile Telecommunications Ser-

vice High Speed Packet Access Network (hereinafter "3GPP UMTS HSPA") **601**C employed as a trusted wireless IPTN to provide IP connections between the MWDN **220** and the FWDN **120**. An eMUA **511** exists as a combination of an S-GW **511**A and a GTP Firewall **511**B. The Network **601**C serves as the trusted wireless IPTN for private connections between 1) the S-GW **511**A (serving as an eMUA) and the eMAC **501**; and 2) between the eMSG **510** and the eMAC **501**. The Network **601**C may assign different APN's for the interfaces **513**C and **514**C. The eMAC **501** employs an HSPA modem card (e.g., physical card) to obtain mobile broadband data service over a UMTS air interface **602**C. The said HSPA modem card provides a secure over-the-air interface **602**C according to the 3GPP HSPA specifications. In one embodiment, the HSPA Network **601**C may belong to the same wireless carrier who owns the LTE MWDN **220**. Common ownership allows for trust between the two entities.

FIG. **6**E illustrates another embodiment of a network architecture of an eMLAN. The eMLAN **600** comprises a Virtual Private Network ("hereinafter "VPN") **601**D employed as a trusted IPTN to provide IP connections between the MWDN **220** and the FWDN **120**. The VPN **601**D provides 1) a trusted IP transport connection **514**D between the eMUA **511** and the eMAC **501**; and 2) a trusted IP transport connection **513**D between the eMSG **510** and the eMAC **501**. The eMAC **501** employs a private and secure interface **602**D to communicate with the VPN **601**D. In one embodiment, the VPN **601**D may belong to the same wireless carrier who owns the LTE MWDN **220**. Common ownership allows for trust between the two entities. In another embodiment, the VPN **601**D may be realized through a secured web portal using Hypertext Transfer Protocol Secure (hereinafter, "HTTPS") protocol.

FIGS. **7** and **8**A illustrate an embodiment of network architecture of an eMLAN, as well as a flow diagram for a method of authenticating and network load balancing a mobile data service over a WLAN. The eMLAN **700** comprises multiple eMACs **501** and **501**A, an eMSG **510** and an eMUA **511**. The eMSG **510** manages a plurality of UE's **140**A and **140**B that may connect to a single eMAC based on the load placed on the eMAC. The load balance process may be included in an authentication process for the establishment of a standard SWn interface. The follow steps describe a process for authenticating the SWn interface establishment and the load balancing amongst the eMAC's **501** and **501**A.

In a connecting step (step 1) a mobile device UE **140**A connects with a FWDN **120** over a Wi-Fi interface and acquires a local IP address from the FWDN **120** via a Dynamic Host Configuration Protocol (hereinafter "DHCP") server **702**. In an authenticating step (step 2), the UE **140**A authenticates against the WLAN via a local AAA **701** server and establishes IP connectivity with the FWDN **120**, once authentication is verified. In a requesting step (step 3), the UE **140**A sends an eMAC connection request (hereinafter "eMAC_CONN") to the default eMAC **501**. The request may be stored in the UE's **140**A internal memory from either a prior access history or from a manual addition made by a user.

In a requesting step (step 4), the default eMAC **501** also sends a connection request to the eMSG **510** after receipt of the eMAC_CONN request. The eMSG **510** tracks the number of UE's, or mobile devices, connected to each eMAC and balances the load of each eMAC by routing each eMAC_CONN request to a proper eMAC within the network. In one embodiment, each eMAC_CONN request is routed to the eMAC with the lightest load. In a redirecting step (step 5), the eMSG **510** replies to the eMAC **501** who received the eMAC_CONN request with the IP address of the selected eMAC **501**A. The request is redirected from the UE **140**A. In a forwarding step (step 6), the default eMAC **501** forwards the IP address of the selected eMAC **501**A to the UE **140**A.

In a transmitting step (step 7), the UE **140**A transmits an IKEv2_SA_INIT message to the chosen eMAC **501**A to secure exchange of the IKEv2_AUTH messages. In a transmitting step (step 8), the UE **140**A further transmits an IKEv2_AUTH request to the selected eMAC **501**A. In a transmitting step (step 9), the selected eMAC **501**A transmits an EAP response message to the eMSG **510**.

In a forwarding step (step 10), the eMSG **510** forwards the EAP response message from the selected eMAC **501**A to the 3GPP AAA server **525** in order to authenticate the UE **140**A. In a retrieval step (step 11), the 3GPP AAA server **525** retrieves the UE **140**A subscription profile data from an HSS **413**. In a generating step (step 12), the 3GPP AAA server **525** generates an 3GPP standard Authentication and Key Agreement (hereinafter "AKA") challenge based on received user profile data and forwards the AKA challenge to the eMSG **510**.

In a forwarding step (step 13), the eMSG **510** further forwards the AKA challenge to the selected eMAC **501**A. In a relaying step (step 14), the selected eMAC **501**A relays the AKA challenge to the UE **140**A. The UE **140**A uses the AKA challenge to authenticate. In a replying step (step 15), the UE **140**A replies to the selected eMAC **501**A, by transmitting a new AKA challenge in order to verify legitimacy of the 3GPP AAA server **525**.

In a forwarding step (step 16), the selected eMAC **501**A forwards the UE generated AKA challenge to the eMSG **510**. In another forwarding step (step 17), the eMSG **510** forwards the UE generated AKA challenge to the 3GPP AAA server **525**. In an issuing step (step 18), the 3GPP AAA server **525** issues an EAP_success message to the eMSG **510**, provided authentication is positive.

In a forwarding step (step 19), the eMSG **510** forwards the EAP_success message to the selected eMAC **501**A to confirm the positive authentication. In a transmitting step (step 20), the selected eMAC **501**A transmits the EAP_success message to the UE **140**A, which completes the mutual authentication between the UE **140**A and the 3GPP AAA server **525**. Finally, in an establishing step (step 21), the UE **140**A and the selected eMAC **501**A establish an IPsec tunnel using the encryption keys exchanged during the authentication process. Lastly, the IPsec tunnel activates an instance of the 3GPP standard SWn interface between the UE **140**A and the selected eMAC **501**A.

FIG. **8**B illustrates a flow diagram describing one embodiment for exchanging message processes, initiated by a mobile device, between an eMAC and an eMUA to establish the user-plane over a public (untrusted) IPTN. In one embodiment, an interface is used for communicating the user-plane, via a standard GTP-U tunnel, over a public (untrusted) IPTN. Once a UE **140**A initiates an MWDN (LTE network) service request, the following steps may be executed by the network architecture illustrated in FIG. **5**A.

In an establishing step (step 1), the UE **140**A from FIG. **5** establishes an instance of the SWn interface with the eMAC **501** under the management of the eMSG **510** following the process described in FIG. **8**. The eMUA **511** establishes an instance of the standard S5 interface with a P-GW **411** of the LTE Network **402**. In a requesting step (step 2), the eMSG **510** sends an I515 interface request to the eMUA **511** over the I512 interface via an intranet of the MWDN **220** to establish the I515 interface between the eMUA **511** and the eMAC **501** (via the Internet.) The I515 and I512 interfaces are the same I515 and I512 interfaces as described in FIG. **5**A. The request message may include a candidate TEID of the GTP-U tunnel

terminated at the eMUA **511**. In a relaying step (step 3), the eMUA **511** determines if a different TEID may be used. If a different TEID is to be used, the eMUA **511** relays a new TEID (hereinafter "new TEID") to the eMSG **510**.

In a verifying step (step 4), the eMSG **510** verifies the new TEID and updates a data base with the new TEID. The eMSG **510** further transmits the I515 interface request, along with information elements, to the eMAC **501**. In one embodiment, the information elements may include an eMUA ID, an IP address, the new TEID, an eMAC ID, and a TEID of the GTP-U tunnel at the eMAC side. In a responding step (step 5), the eMAC **501** respond to the received I515 interface request (including the information elements) by sending a confirmation to the eMSG **510**. The eMSG **510** updates its database upon receipt of the confirmation.

In a constructing step (step 6), the eMAC **501** constructs the I515 interface's GTP-U tunnel. Construction of the GTP-U tunnels takes the received information into consideration. The information elements may comprise an eMUA ID, an eMUA IP address, an eMUA TEID, an eMAC ID, an eMAC TEID, and an eMAC IP address. In one embodiment, the eMAC **501** uses the FWDN's **120** local IP address as the source IP address and the eMUA's **511** IP address as the destination address for the UDP transport of the GTP-U tunnel. The eMUA **511** IP address is public and therefore internet routable. However, the source IP address of the UDP transport packets, used by the eMAC, is local and private to the FWDN, therefore, not internet routable. In order to permit the source IP address to become internet-routable, the firewall FWR **124** performs NAPT and replaces the source IP address with the network IP address of the FWDN **120**, before the GTP-U data packets are communicated to the eMUA **511**.

In an establishing step (step 7), the eMUA **511** establishes the returning GTP-U tunnel of the I515 interface by using the source IP address of the UDP transport of the GTP-U packet received. In one embodiment, the returning path is transparent to the FWR **124** since initiation of the path originated from the eMAC **501**, behind the FWR **124**. In an establishing step (step 8), both the eMAC **501** and the eMUA **511** establish an instance of the I515 interface. Data exchange between the eMAC **501** and the eMUA **511** is permitted by the FWR **124**. In an activation step (step 9), the eMUA **511** activates the standard S5 interface to the LTE network, which completes the point-to-point IP connection between the UE **140**A and the P-GW **411** of the LTE network **402**.

FIG. **8**C illustrates a flow diagram describing another embodiment for exchanging message processes, initiated by a mobile network, between an eMAC and an eMUA to establish the user-plane over a public (untrusted) IPTN. In this embodiment, it is assumed that the LTE network **402** initiates a MWDN service request. In an establishment step (step 1) the UE **140**A establishes an instance of the SWn interface with the eMAC **501** under the management of the eMSG **510**. The eMUA **511** establishes an instance of the standard S5 interface to a P-GW **411** of the LTE Network **402**. In a requesting step (step 2), the P-GW **411** requests that the eMUA **511** activate the standard S5 interface between them. In a processing step (step 3), upon receipt of the S5 interface activation request, the eMUA **511** initiates the steps (hereinafter "Process A") described above with respect to FIG. **8**A.

FIG. **9** illustrates a flow diagram **900** describing one embodiment for providing mobile data service to a mobile device over a FWDN, wherein the mobile device initiates the mobile data service request. In a coupling step **910**, an MWDN is coupled to an FWDN via an IPTN. In a receiving step **920**, a mobile data service request is received via the FWDN. In a verifying step **930**, the authenticity of the mobile data service request is verified. In one embodiment, the MWDN is configured to authenticate the service request and communicate the result to the eMAC. In a delivering step **940**, mobile data service is provided to the mobile device. In one embodiment, the service is provided via the FWDN. In another embodiment, the mobile device transparently communicates with the MWDN via the FWDN.

In a separating step **950**, a user-plane data and a control-plane data is received from the mobile data service request and separated into two distinct data streams. In a determination step **960**, a determination is made as to whether the user-plane data is communicated to the MWDN over a trusted IPTN, an untrusted IPTN or directly with an IPTN. In a transmission step **970**, the control-plane is transmitted to the MWDN via a first trusted IPTN, without passing through a firewall. In another transmission step **980**, the user-plane data is transmitted to the MWDN via an untrusted IPTM. In one embodiment, the user-plane data passes through a firewall, untouched. In an optional step (not shown), step **980** is replaced with transmitting the user-plane data to the MWDN via a second trusted IPTN, wherein the user-plane data does not pass through a firewall.

FIG. **10** illustrates a flow diagram **1000** describing another embodiment for providing mobile data service, initiated by a PLMN, to a mobile device over a FWDN. In coupling step **1010** an MWDN is coupled to an FWDN via a first, second, and third IPTN connection. Further, the MWDN is coupled to the PLMN via a fourth IPTN connection. In a receiving step **1020**, a mobile data service request is received from the PLMN. In one embodiment, the mobile data service request is received from an MSN located within the PLMN. In a confirmation step **1030**, a confirmation is made that a mobile device associated with the mobile data service request is located within and communicatively coupled to the FWDN. In one embodiment, such confirmation is made by intercepting registration and location information coming from the mobile device. In a verifying step **1040**, the authenticity of the mobile data service request is verified. In one embodiment, the MWDN is configured to authenticate the service request and communicate the result to the eMAC. In a delivering step **1050**, mobile data service is provided to the mobile device. In one embodiment, the service is provided via the MWDN and the FWDN. In another embodiment, the mobile device transparently communicates with the PLMN via the FWDN and the MWDN.

In a separating step **1060**, a user-plane data and a control-plane data is received from the mobile data service request and separated into two distinct data streams. In a determination step **1070**, a determination is made as to whether the user-plane data is communicated to the FWDN over a trusted or untrusted IPTN. In a transmission step **1080**, the control-plane data is transmitted to the FWDN over the first IPTN, wherein the first IPTN is a trusted network. Lastly, in a delivery step **1090**, the user-plane data is provided to the mobile device via the trusted or untrusted IPTN.

In one embodiment, additional steps for completing the confirmation step **1030** are now described. First, a query for identifying the location of the mobile device associated with the mobile data service request is sent from the MWDN to the mobile device via the first IPTN wherein the first IPTN is a trusted wireless network. Next, the mobile device responds to the query wherein the response contains location information of the mobile device within the FWDN. Lastly, the MWDN maintains the received location information in a database.

One skilled in the art can appreciate that the steps illustrated above, with respect to FIGS. **8**-**10**, may be altered in the ordering of steps and/or the number of steps. In other words,

a smaller or larger number of steps may be employed without deviating from the scope of the invention. In one embodiment, the methods and applications of the eMAC **501** and the eMSG **510** modules may be realized in computer software. Further, one or more computing environments (e.g., computers, servers, etc.) may be utilized to host the eMAC **501** and the eMSG **510** modules. For example, both the eMSG **510** and the eMUA **511** may reside in a single computing environment with different functional hardware modules, wherein the eMSG **510** and eMUA **511** may remain functionally independent from each other. Additionally, each of the eMSG **510** and the eMUA **511** may each reside in independent computing environments that may span multiple servers, for example.

FIG. **11** illustrates an embodiment of a computer system useful for implementing one or more embodiments described throughout this invention. One or more computing devices A**00** may be used to perform the functions of an eMSG and/or an eMAC.

The computer system A**00** comprises a system bus A**10**, a CPU A**02**, a communications port A**04**, a main memory A**01**, a removable storage media A**07**, a ROM A**03**, and a mass storage A**05**. The computer system A**00** may be connected to one or more display screens A**08**, input devices A**09**, or peripheral devices (not shown).

The memory A**01** may be RAM, or any other dynamic storage device commonly known by those skilled in the art. Read-only memory A**03** may be any static storage device such as PROM chips used for storing static information such as instructions for CPU A**02**. Mass storage A**05** may be used to store information and instructions. Mass storage A**05** may be any storage medium know by those skilled in the art, including but not limited to a hard disk, an SSD, flash memory, and writeable optical discs to name a few.

The System Bus A**10** provides for communication connections between each of the components of the Computer System A**00**. The System Bus A**10** may be any buss transport know by those skilled in the art, including but not limited to PCI, PIC/X, SCSI, and USB to name a few.

The main memory A**01** is encoded with one or more eMSG applications A**01**A that support functionalities as discussed throughout the specification. The eMSG application A**01**A may be embodied as software code such as data and/or logic instructions (e.g., code stored in the memory or on another computer readable medium such as a disk) that support processing functionality according to different embodiments described herein. During operation of one embodiment, the CPU A**02** accesses the main memory A**01** via the use of the system bus A**10** in order to launch, run, execute, interpret or otherwise perform the logic instructions of the eMSG application A**01**A. Execution of the eMSG application A**01**A produces processing functionality within the eMSG process A**02***a*. In other words, the eMSG process A**02**A represents one or more portions of the eMSG application A**01**A performed within the CPU A**02**.

It should be noted that, in addition to the eMSG process A**02**A that carries out operations as discussed herein, other embodiments herein include the eMSG application A**01**A itself (i.e., the un-executed or non-performing logic instructions and/or data). The content of the eMSG application A**01**A may be stored on a computer readable medium. The eMSG application A**01**A can also be stored in a memory type system such as in firmware, ROM, PROM, and RAM, to name a few.

The Computer System A**00** may also serve as a computing environment for an eMAC application and its Processes. In another embodiment, the Computer System A**00** may comprise more or less components. Additionally, more than one of any given component may exist, such as multiple CPUs, memories, storage devices, buses, etc.

In one or more embodiments, an eMUA is implemented in both software and hardware. FIG. **12** illustrates an embodiment of an architecture of a data network platform B**00** that may be used as the hardware platform of an eMUA.

The Data Network Platform B**00** comprises at least a CPU B**01**, a network processing unit (hereinafter "NPU") B**02**, a management console B**03**, a switching fabric (hereinafter "SF") B**04**, a memory B**05**, an ingress communication port (hereinafter "ICP") B**06**, and an egress communication port (hereinafter "ECP") B**07**.

The ICP B**06** provides Ethernet ports for the eMUA as an NE to connect with and receive IP data packets from other NE(s). The ICP B**06** connects with the SF B**04** electronically through a data bus to communicate with other hardware units in the data network platform B**00**.

The ECP B**07** provides Ethernet ports for the eMUA as an NE to connect with and transmit IP data packets to other NE(s). It connects with the SF B**04** electronically through a data bus to communicate with other hardware units in the data network platform B**00**.

The MEMORY B**05** stores data and instructions encoded to implement one or more embodiments of the eMUA. The encoded instructions are executable by the CPU B**01** and/or the NPU B**02**.

The CPU B**01** executes and processes encoded instructions stored in the MEMORY B**05**. In one embodiment, the CPU B**01** is designated to mainly process the control-plane data of the eMUA. This allows for increased efficiency. The CPU B**01** also connects to the SF B**04** electronically through a data bus to communicate with other hardware units in the data network platform B**00**.

The NPU B**02** executes and processes encoded instructions stored in the MEMORY B**05**. In one embodiment, the NPU B**02** is designated to mainly process the user-plane data of the eMUA. The NPU B**02** also connects to the SF B**04** electronically through a data bus to communicate with other hardware units in the data network platform B**00**.

The Management Console B**03** provides front-end management interfaces to allow a user to manage the eMUA locally and/or remotely. In one embodiment, the Management Console B**03** offers a serial port and an Ethernet port for providing user access. The Management Console B**03** also connects to the SF B**04** electronically through a data bus to communicate with other hardware units in the data network platform B**00**.

The SF B**04** connects with the CPU B**01**, the NPU B**02**, the Management Console B**03**, the Memory B**05**, the ICP B**06** and the ECP B**07** electronically through data buses to provide cross-connections so that any of the CPU B**01**, the NPU B**02**, the Management Console B**03**, the Memory B**05**, the ICP B**06** and the ECP B**07** can communicate with each other both electronically and logically.

Embodiments described herein may be provided as a computer program product, which may include a machine-readable medium having instructions stored therein, which when executed by a computer perform a process. Moreover, embodiments herein may also be downloaded as a computer program product, wherein the program may be transferred from a remote computer to a requesting computer by way of data signals embodied in a carrier wave or other propagation medium via a communication link (e.g., modem or network connection).

As discussed herein, embodiments of the present invention include various steps or operations. A variety of these steps

may be performed by hardware components or may be embodied in machine-executable instructions, which may be used to cause a general-purpose or special-purpose processor programmed with the instructions to perform the operations. Alternatively, the steps may be performed by a combination of hardware, software, and/or firmware.

Various modifications and additions can be made to the example embodiments discussed herein without departing from the scope of the present invention. For example, while the embodiments described above refer to particular features, the scope of this invention also includes embodiments having different combinations of features and embodiments that do not include all of the described features. Accordingly, the scope of the present invention is intended to embrace all such alternatives, modifications, and variations together with all equivalents thereof.

What is claimed is:

1. A method for providing mobile data service to a mobile device over a Fixed Wireless Data Network (FWDN), the method comprising:

coupling a Mobile Wireless Data Network (MWDN) with the FWDN via an IP Transport Network (IPTN);

receiving a mobile data service request, via the FWDN, from a mobile device;

verifying the authenticity of the mobile data service request, wherein the mobile data service request is at least authenticated by the MWDN;

delivering mobile data service, via the FWDN, to the mobile device;

receiving a first control-plane data from the MWDN, wherein the first control-plane data comprises configuration and management instructions;

receiving a data stream comprising a user-plane data and a second control-plane data associated with the mobile data service request;

extracting the user-plane data from the data stream;

extracting the second control-plane data from the data stream;

transmitting a third control-plane data to the MWDN over a first trusted network, wherein the third control-plane data is derived from the second control-plane data, wherein the third control-plane data requests routing instructions for the user-plane data;

receiving a fourth control-plane data from the MWDN over the first trusted network, wherein the fourth control-plane data provides routing instructions for the user-plane data;

upon receipt of the fourth control-plane data, determining whether the user-plane data will be communicated to the MWDN over an untrusted network, a trusted network or directly without a transport network; and

wherein the mobile device transparently communicates with the MWDN through the FWDN.

2. The method of claim **1**, wherein the mobile data service request is received within a proximity of the FWDN and further intercepted by the FWDN, wherein if the FWDN is a private network, the mobile data service request is further authenticated by the FWDN.

3. The method of claim **1**, wherein verifying the authenticity of the mobile data service request further comprises querying a home subscriber server (HSS) of the MWDN for an authorization confirmation.

4. The method of claim **1**, further comprising:

upon receipt of routing instructions from the fourth control-plane data, transmitting the user-plane data to the MWDN over an untrusted network through a firewall positioned between the FWDN and the MWDN, wherein the user-plane data is unencrypted at an IP layer of the transport network and thus passes through the firewall; and

wherein a transport layer of the user-plane data uses an IP protocol type that is accepted by the firewall wherein the firewall will not block the user-plane data from delivery.

5. The method of claim **1**, further comprising: upon receipt of routing instructions from the fourth control-plane data, transmitting the user-plane data to the MWDN over a second trusted network positioned between the FWDN and the MWDN.

6. The method of claim **5**, wherein the second trusted network is a commercial mobile data network, wherein an entity that maintains the commercial mobile data network is associated with an entity that maintains the MWDN.

7. The method of claim **5**, wherein the second trusted network is a virtual private network (VPN), wherein an entity that maintains the VPN is associated with an entity that maintains the MWDN.

8. The method of claim **1**, wherein the first trusted network is a commercial mobile data network, wherein an entity that maintains the commercial mobile data network is associated with an entity that maintains the MWDN.

9. The method of claim **1**, wherein the first trusted network is a virtual private network (VPN), wherein an entity that maintains the VPN is associated with an entity that maintains the MWDN.

10. A computer program product, comprising a non-transitory computer-readable medium having instructions therein, which when executed by a processor cause the processor to perform a method for providing mobile data service to a mobile device over a Fixed Wireless Data Network (FWDN), the method comprising:

coupling a Mobile Wireless Data Network (MWDN) with the FWDN via an IP Transport Network (IPTN);

receiving a mobile data service request, via the FWDN, from a mobile device;

verifying the authenticity of the mobile data service request, wherein the mobile data service request is at least authenticated by the MWDN;

delivering mobile data service, via the FWDN, to the mobile device;

receiving a first control-plane data from the MWDN, wherein the first control-plane data comprises configuration and management instructions;

receiving a data stream comprising a user-plane data and a second control-plane data associated with the mobile data service request;

extracting the user-plane data from the data stream;

extracting the second control-plane data from the data stream;

transmitting a third control-plane data to the MWDN over a first trusted network, wherein the third control-plane data is derived from the second control-plane data, wherein the third control-plane data requests routing instructions for the user-plane data;

receiving a fourth control-plane data from the MWDN over the first trusted network, wherein the fourth control-plane data provides routing instructions for the user-plane data;

upon receipt of the fourth control-plane data, determining whether the user-plane data will be communicated to the MWDN over an untrusted network, a trusted network, or directly without a transport network; and

wherein the mobile device transparently communicates with the MWDN through the FWDN.

11. The computer program product of claim **10**, further comprising:

upon receipt of routing instructions from the fourth control-plane data, transmitting the user-plane data to the MWDN over an untrusted network through a firewall positioned between the FWDN and the MWDN, wherein the user-plane data is unencrypted at an IP layer of the network and thus passes through the firewall; and

wherein a transport layer of the user-plane data uses an IP protocol type that is accepted by the firewall wherein the firewall will not block the user-plane data from delivery.

12. The computer program product of claim **10**, further comprising: upon receipt of routing instructions from the fourth control-plane data, transmitting the user-plane data to the MWDN over a second trusted network positioned between the FWDN and the MWDN.

* * * * *