United States Patent [19]

Sheldrake

[11] **Patent Number: Des. 321,885**

[45] **Date of Patent: ** Nov. 26, 1991**

[54] **HOLDER FOR A PORTABLE TELEPHONE HANDSET**

[75] Inventor: **Christopher Sheldrake**, Basingstoke, England

[73] Assignee: **Technophone Limited**, Surrey, England

[**] Term: **14 Years**

[21] Appl. No.: **592,835**

[22] Filed: **Oct. 4, 1990**

[30] **Foreign Application Priority Data**

Apr. 12, 1990 [GB] United Kingdom 2006137

[52] **U.S. Cl.** **D14/253**; D14/251; D14/138; D14/148; D6/553; D8/373

[58] **Field of Search** D14/253, 251, 138, 142; D6/553; 379/58, 452, 455, 457, 433, 454, 435, 450, 446; D8/373; 455/89, 90; D21/111; 248/314

[56] **References Cited**

U.S. PATENT DOCUMENTS

D. 157,849	3/1950	Dreyfuss	D14/253
D. 207,403	4/1967	Schulte	D14/253
D. 209,967	1/1968	Clearman	D14/253
D. 216,641	2/1970	Phillips	D14/252
D. 241,144	8/1976	Davis	D14/253
D. 261,509	10/1981	Cobb	D14/253
D. 282,281	1/1986	Spranger et al.	D14/138
D. 282,465	2/1986	Hurley et al.	D14/138
D. 306,299	2/1990	Soren et al.	D14/138
D. 317,157	5/1991	Jondelius	D8/373
2,339,413	1/1944	King	179/146
2,443,329	6/1948	Sears	179/146
3,192,894	7/1965	Staver	248/314 X
3,757,363	9/1973	Langlais	248/314 X
4,299,344	11/1981	Yamashita et al.	248/314 X
4,833,700	5/1989	Seaburg	379/58

Primary Examiner—Horace B. Fay, Jr.
Attorney, Agent, or Firm—Perman & Green

[57] **CLAIM**

The ornamental design for a holder for a portable telephone handset, as shown and described.

DESCRIPTION

FIG. **1** is a left side, top and front perspective view of a holder for a portable telephone handset;
FIG. **2** is a rear elevational view thereof;
FIG. **3** is a right side elevational view thereof;
FIG. **4** is a top plan view thereof; and
FIG. **5** is a bottom plan view thereof.

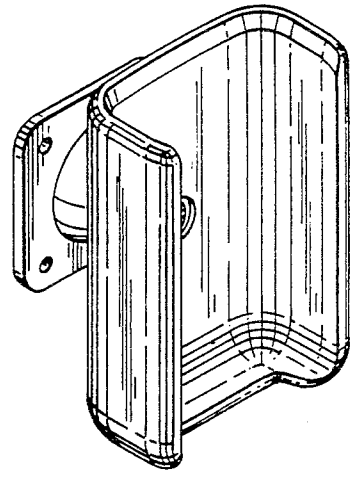

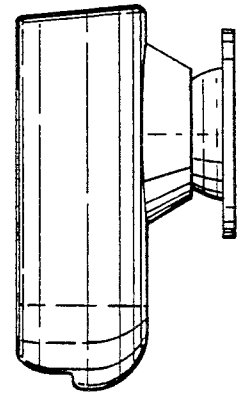

Fig. 1.

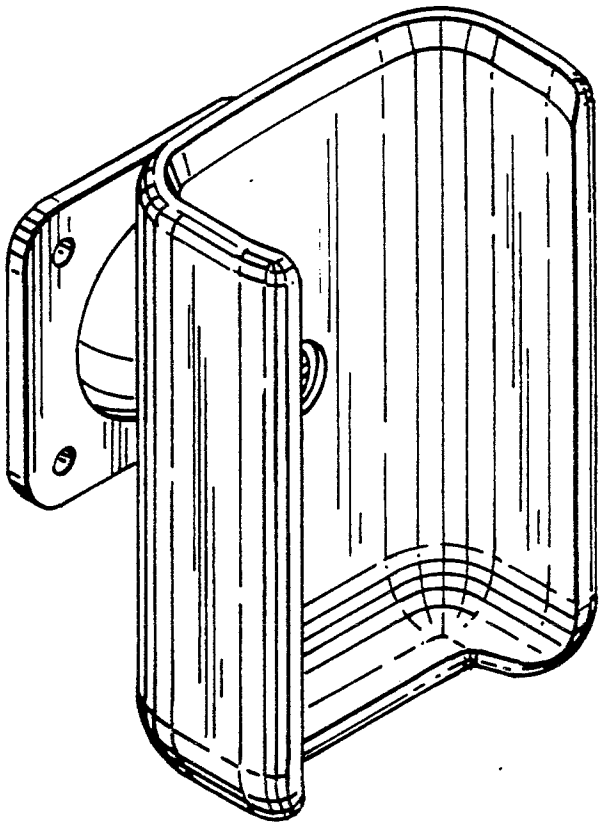

Fig. 2.

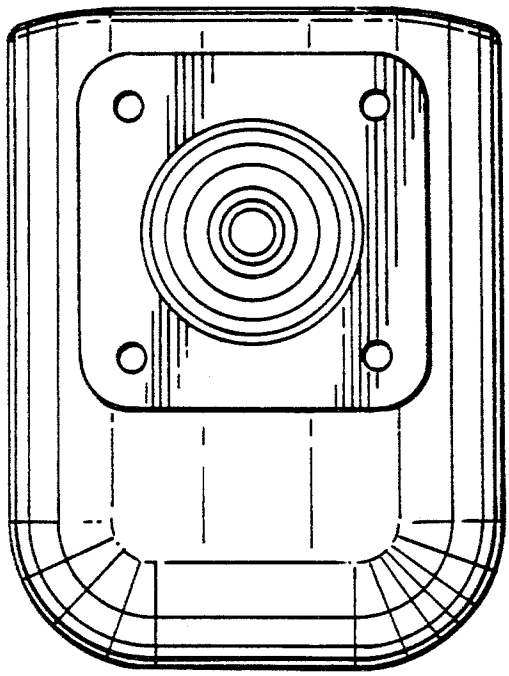

Fig. 3.

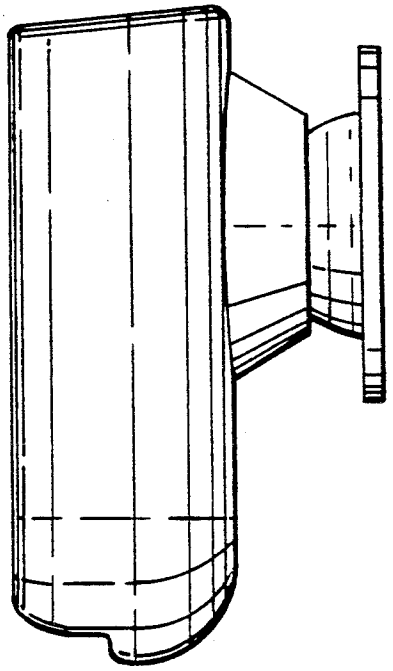

Fig. 4.

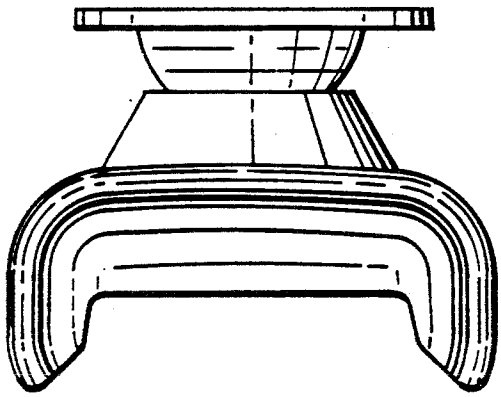

Fig. 5.

