Dec. 15, 1964 T. H. STEPHENS ETAL 3,161,190

MASONRY CUTTER

Filed June 27, 1963 2 Sheets-Sheet 1

Fig. 1

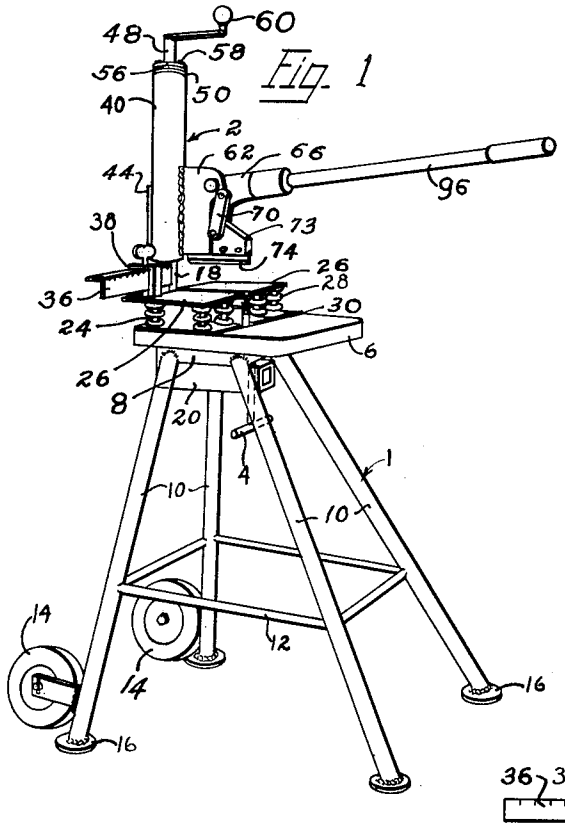

Fig. 2

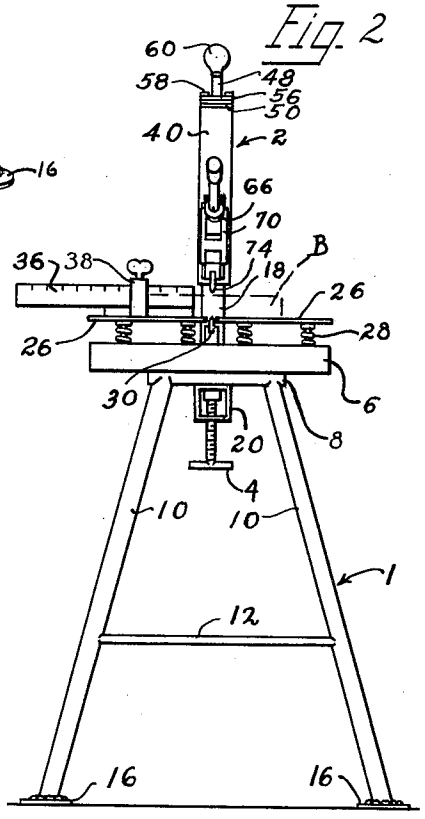

Fig. 3

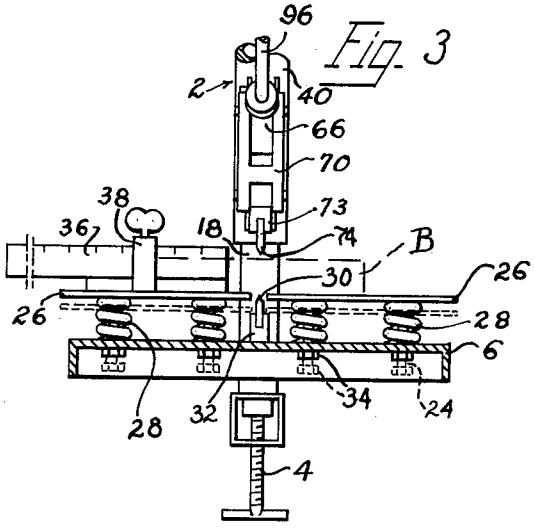

INVENTORS.
Thomas H. Stephens
James H. Stephens
BY Wayland D. Keith
THEIR AGENT.

Dec. 15, 1964 T. H. STEPHENS ETAL 3,161,190

MASONRY CUTTER

Filed June 27, 1963 2 Sheets-Sheet 2

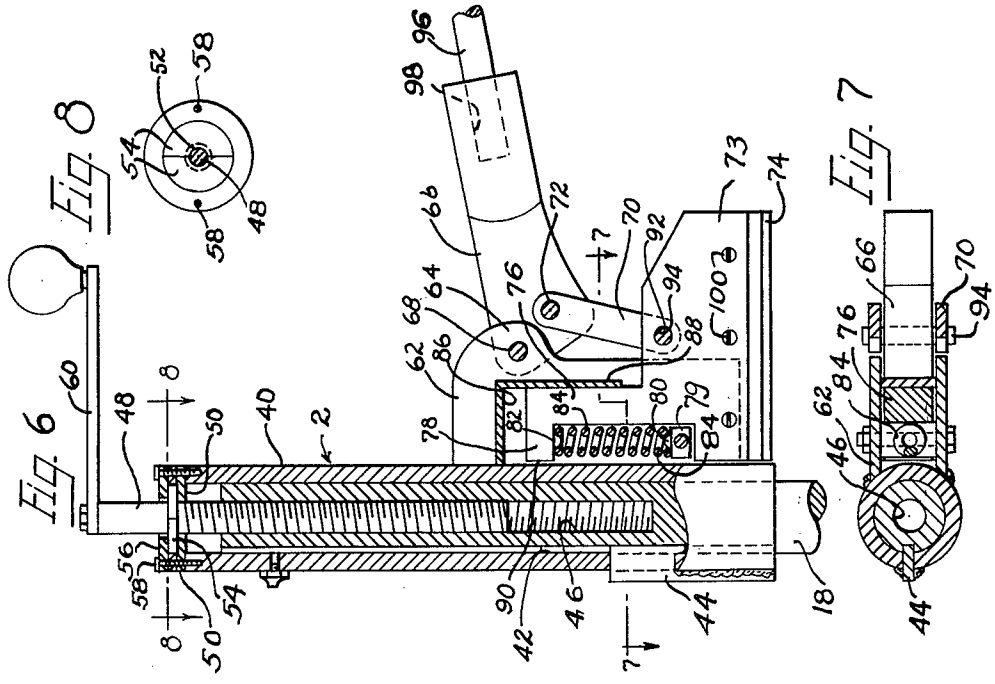

Fig. 8

Fig. 7

Fig. 6

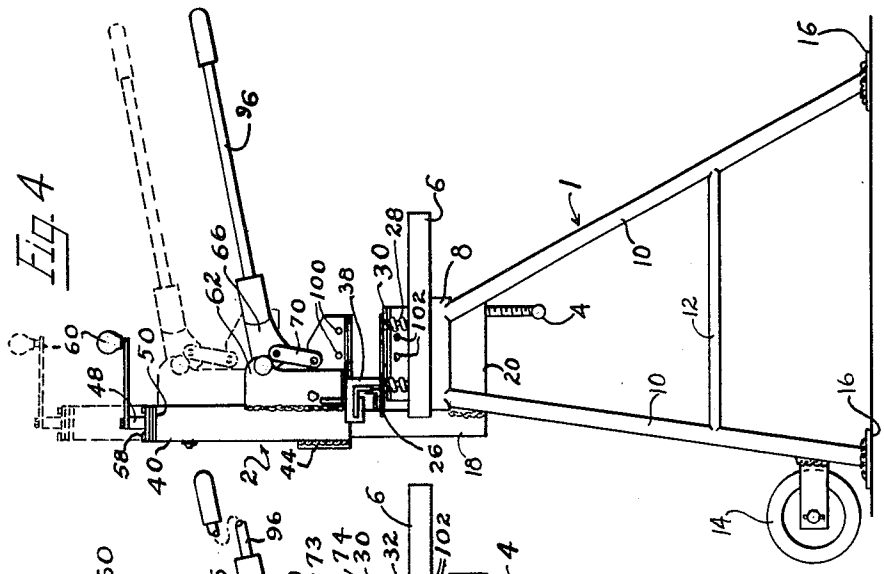

Fig. 4

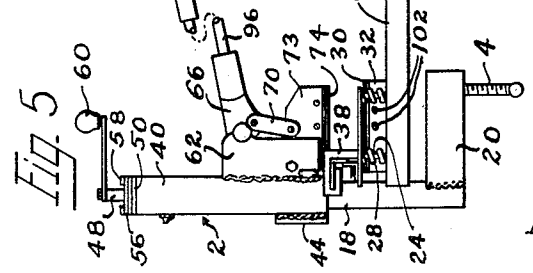

Fig. 5

INVENTORS.
Thomas H. Stephens
James H. Stephens
BY Wayland B. Keith
THEIR AGENT.

United States Patent Office 3,161,190 Patented Dec. 15, 1964

3,161,190

MASONRY CUTTER

Thomas H. Stephens, 300 SE. 6th, and James H. Stephens, 2204 W. 10th, both of Plainview, Tex.

Filed June 27, 1963, Ser. No. 291,034
7 Claims. (Cl. 125—23)

This invention relates to improvements in brick cutters and the like, and more particularly to a manually powered brick cutter for cutting bricks or other masonry like members such as concrete blocks and certain stones.

Various cutters have been proposed heretofore for performing such functions, but these for the most part were cumbersome and bulky, and complex in structure to perform the function intended.

The present device is so constructed that it may be readily dismantled for carrying from place to place and may be readily reassembled in a minimum of time to perform brick, stone, and masonry cutting operations, which operations heretofore required large stationary machines.

An object of this invention is to provide a device for cutting brick and the like, which device is readily adjustable to cut blocks of masonry within a wide range of dimensions.

Another object of the invention is to provide a brick cutter and the like for cutting blocks of masonry, which device is manually operated, and which exerts high cleavage pressure between two opposed masonry cutting knives.

Still another object of the invention is to provide a masonry cutting device which supports the block of masonry above the lowermost knife to enable the block to be freely slid thereover until correctly positioned.

Still a further object of the invention is to provide a masonry cutting device which is lever operated, the pressure on the knives of which is progressively increased as the knives bite into the masonry block.

Still a further object of the invention is to provide an adjustment member to readily vary the distance between the knives preparatory to the cutting of the masonry block.

Still a further object of the invention is to provide a gauging device to enable the masonry blocks to be readily gauged for length without the use of ancillary measuring devices.

Yet another object of the invention is to provide a masonry cutter which is accessible from the front and from each side.

With these objects in mind and others which will become manifest as the description proceeds, reference is to be had to the accompanying drawings in which like reference characters designate like parts in the several views thereof, in which:

FIG. 1 is a perspective view showing a front and a side and top of the device with the upper knife being shown in raised position;

FIG. 2 is a front elevational view of the device, showing the knife in a similar position to that shown in FIG. 1;

FIG. 3 is an enlarged, fragmentary, front elevational view of the cutter actuating mechanism, with parts broken away and shown in section, with the masonry block supporting table shown in full outline in normal position and dashed outline in depressed position;

FIG. 4 is a side elevational view showing one position of the masonry block cutter in full outline and showing the masonry cutter in dashed outline in a raised position;

FIG. 5 shows the detachable cutter portion of the masonry block cutter device removed from the supporting stand;

FIG. 6 is a detailed view, partly in section, of other mechanisms to actuate the cutter knife;

FIG. 7 is a sectional view taken on the line 7—7 of

FIG. 6, looking in the direction indicated by the arrows; and

FIG. 8 is a sectional view taken on line 8—8 of FIG. 6, looking in the direction indicated by the arrows.

With more detailed reference to the drawing, numeral 1 designates generally a supporting stand for the masonry cutter device. The numeral 2 designates generally a masonry cutting device which is attachably connected to the stand 1 by a clamp screw 4, which clamp screw bindingly engages the lower surface of stationary table 6 with the upper face of support stand 1 when tightened, or the masonry cutting device 2 may be removed from the support stand 1 as indicated in FIG. 5, whereby the masonry cutting device may be attached to a suitable work bench, if desired. The support stand 1 preferably has a rectangular top member 8 welded or otherwise secured together to form a rectangular member to which legs 10 of the support stand are secured as by welding. The legs 10 diverge downwardly and outwardly and braces 12 maintain the legs in spaced apart relation, and each leg 10 has a support pad 16 on the lower end thereof.

A pair of wheels is provided, one of which wheels is secured on each of a pair of adjacent legs 10, as will best be seen in FIGS. 1 and 4, so that the wheels 14 will be spaced above the lower face of support pads 16 on the lower end of the respective legs 10 so that the support stand 1 will be stable during use, and which may be tilted onto the wheels for movement from place to place. The masonry cutting device 2, as illustrated in FIG. 5, may be readily placed in a car, pickup truck or the like, as can the support stand 1, for transportation from place to place.

The masonry cutting device 2 has a stationary table 6 forming a base which is welded or otherwise secured to an upstanding standard 18 with the base serving as an abutment to seat on the upper surface of rectangular top member 8. An arm 20 is secured near the end of the standard 18 and extends beneath the rectangular top member 8 and has a clamp screw 4 extending therethrough, which clamp screw bindingly engages the upper surface of rectangular top member 8 with the lower surface of stationary table 6. The stationary table or base 6 is apertured with spaced apart apertures to receive headed pins 24 therethrough, which pins extend upward and are welded or otherwise secured to a divided, movable support table 26, which table 26 is supported on a plurality of compression springs 28 so as to normally hold the upper face of the movable support table 26 in a plane which is normally above the edge of the masonry cutting blade 30 mounted in support bar 32 on stationary table 6. In this manner, masonry may be moved over movable support table 26 without injuring the cutting edge of blade 30.

The pins 24 each have a head or an abutment 34 on the lower end thereof to engage the lower side of stationary table 6 when the movable support table 26 is in the uppermost position under the influence of compression springs 28. A compression spring 28 surrounds each pin 24, as will best be seen in FIG. 3.

The movable support table 26 has a guide 36 secured along a portion of the rear side thereof, which guide 36 has indicia thereon, as will best be seen in FIG. 3, whereby an exact measurement of the masonry being cut can be determined prior to the cutting thereof. Furthermore, a stop 38 is provided on the guide 36 to enable the stop to be set at a predetermined position for cutting members of masonry into identical lengths.

The upstanding standard 18 has a tubular member 40 telescoped downward thereover, as will best be seen in FIG. 6. The upstanding standard 18 has a longitudinal keyway 42 therein to receive a key 44, which key projects

through a slot in the lower end of tubular member 40, and which key is secured to the tubular member 40 as by welding or the like. The upstanding standard 18 is internally threaded a spaced distance downward from the upper end thereof, as indicated at 46, to threadably receive a screw threaded member 48 which passes down through the upper end of tubular member 40. The upper end of tubular member 40 has an apertured cap 50 on the upper end thereof, which aperture is of a size to permit passage of screw threaded member 48 downward therethrough. The screw threaded member 48 has an annular recess 52 therearound to receive a pair of complementary U-shaped retaining washers 54 therein, which washers extend outward and are secured in place by a removable cap 56, through which cap 56 bolts 58 pass to bindingly engage the U-shaped washers 54 against longitudinal movement with respect to tubular member 40. A crank 60 is fixedly secured to the upper end of screw threaded member 48 to enable the turning of screw threaded member 48, which will move the tubular member 40 relative to the upstanding standard 18.

A pair of spaced apart, outstanding brackets 62 is secured to the side of tubular member 40, each of which brackets has an outwardly extending apertured lug 64 thereon to complementary receive an apertured member 66 therebetween, one of which apertures registers with apertures in lug 64 to enable a pin 68 to be passed therethrough. A further aperture is formed in member 66 and is spaced apart from pin 68 and registers with apertures in the upper end of a pair of linkages 70 in such manner as to enable a pin 72 to be passed through the apertures in linkages 70 and the further aperture in member 66.

A movable knife or cutter blade 74 is mounted, in sliding relation, between the pair of brackets 62, as will best be seen in FIGS. 6 and 7. The knife or cutter blade 74 is of a length to cut a masonry block the desired width and has an upstanding leg 76 thereon with an inturned arm 78. A bar 79 passes transversely through the spaced apart pair of brackets 62 and is removably secured therein and preferably has a spring retaining seat 80 on the upper face thereof, which is in aligned relation with a spring seat 82 on the upper face of arm 78. A web 86 extends between and is secured to spaced apart, outstanding brackets 62 to form a rigid brace therefor. A spring 84 is interposed between spring seats 80 and 82 and is in sufficient compression to cause the blade 74, arm 78, and a handle 96 to be raised, so the upper face of arm 78 will abut with a face of web 86 to limit the upward movement of the blade 74. The outer face of upstanding leg 76 is in sliding relation with the inner face of a plate 88 which extends between slide brackets 62. The inner end of arm 78, as indicated at 90, is in sliding relation with the side of tubular member 40 so as to hold the blade 74 in true guided relation.

The blade support member 73 has an aperture 92 therethrough. The linkages 70 are apertured on their lower end to complementally register with the aperture 92 in the blade support member 73 to enable a pin 94 to be passed therethrough to enable the blade support member 73 and the blade 74 to be moved upward and downward upon movement of the lever 96, which extends outward from member 66, which has a socket 98 therein to enable the lever 96 to be inserted thereinto and removed therefrom. The angularity of the apertures in member 66 is such that, when the lever 96 is moved to urge blade 74 downward, the pins 68, 72, and 94 become more nearly aligned to present a lever power that approaches or attains toggle action at the point where it is necessary to apply the greatest pressure to the masonry being cut. However, upon release of pressure, the spring 84 will return the lever 96 to the uppermost position to receive subsequent masonry pieces, such as bricks, concrete blocks, stones and the like thereunder for successive actions by the cutter blade 74 thereupon.

The height of the movable cutter blade 74 may be varied relative to stationary cutter blade 30 by turning the crank 60 to either raise or lower the tubular member 40 which carries the movable cutter blade 74 in the manner set out above.

Operation

By having the movable support table 26 supported on compression springs 28, a block of masonry may be placed thereon and moved therealong until the cutting edge of movable cutter blade 74 is directly above the portion of the masonry block to be cut, and with the tubular member 40 adjusted vertically by crank 60 until the cutting edge of the blade 74 is directly above the masonry to be cut, the lever 96 is then moved downward, and as pin 72 approaches a straight line with pins 68 and 94, the maximum pressure of the cutter blade 74 is exerted on the masonry block, such as indicated at B, which will cause a cleavage of the masonry. However, if the cutting edge of blade 74 cuts into the stone and the stone or masonry block does not shear or cleave, the crank 60 may be turned to screw the screw threaded member 48 in such manner as to lower the blade 74, whereupon a further action of the movable blade 74 may be had without removing the masonry from the movable support table 26.

It is to be pointed out that the device is easy to assemble and disassemble, that it is easy to remove the blades 30 and 74 by loosening screws 100 and 102, respectively. Furthermore, the screw threaded member 48 may be readily removed by removing bolts 58, removable cap 56, and U-shaped washers 54. The various parts may be readily replaced and removed when they become worn.

Having thus clearly shown and described the invention, what is claimed as new and desired to be secured by Letters Patent is:

1. In a device for cutting masonry;
   (*a*) a base,
   (*b*) a standard secured to said base and upstanding therefrom,
   (*c*) a tubular member slid over said upstanding standard in telescoping relation,
      (1) adjustment means to adjust said tubular member relative to the length of said upstanding standard,
   (*d*) a divided, movable support table mounted on said base for supporting masonry thereon,
   (*e*) a stationary cutter blade mounted on said base intermediate said divided table portions,
   (*f*) a cutter blade mounted on said tubular member and being movable relative thereto,
   (*g*) lever means pivotally mounted on said tubular member,
   (*h*) linkage means interconnecting said lever means and said cutter blade movably mounted on said tubular member to move said cutter blade relative to said tubular member,
      (1) said stationary cutter blade being positioned in aligned relation with respect to said movable cutter blade, and
   (*i*) resilient means mounted on said tubular member and being in connected relation with said movable cutter blade to normally urge said movable cutter blade away from said stationary cutter blade.

2. A device for cutting masonry, as defined in claim 1, wherein
   (*a*) said adjustment means to adjust said tubular member relative to said upstanding standard is interengaging screw threaded means,
   (*b*) a crank is positioned on one of said screw threaded means,
   (*c*) retaining means on one of said interengaging screw threaded means to retain said screw threaded means against relative arcuate movement with respect to said tubular member.

3. A device for cutting masonry, as defined in claim 1, wherein

(*a*) said upstanding standard has a longitudinal groove formed in a side thereof, and

(*b*) means is secured to said tubular member and interengages in said groove in said upstanding standard to maintain said tubular member against rotation relative to said upstanding standard.

4. A device for cutting masonry, as defined in claim 1, wherein

(*a*) said tubular member has a pair of spaced apart, outstanding brackets on one side thereof,

(*b*) said movable knife being positioned between said pair of spaced apart, outstanding brackets to be guided thereby,

(*c*) a web extending between said spaced apart, outstanding brackets which guides a portion of said movable blade,

(*d*) a support bar mounted between said spaced apart, outstanding brackets, and

(*e*) said resilient means mounted on said tubular member being supported by said bar which extends between said spaced apart, outstanding brackets, the other end of said resilient means being in bearing relation with a portion of said blade to urge said movable blade away from said stationary blade.

5. A device for cutting masonry, as defined in claim 1, wherein

(*a*) said base is mounted on a stand having downwardly extending legs thereon,

(*b*) screw threaded means securing said base to said stand, and

(*c*) a pair of wheels mounted on a side of said stand and being engagable with a support terrain on moving said stand from an upright position to an angulated position.

6. A device for cutting masonry, as defined in claim 1, wherein

(*a*) said divided movable table is supported on compression springs, and

(*b*) means limiting the upward movement of said resiliently supported table.

7. A device for cutting masonry, as defined in claim 6, wherein

(*a*) an outstanding member is secured to and extends outwardly from said upstanding standard and is in parallel relation with a side of said divided table,

(1) measuring indicia on said outstanding member,

(*b*) stop means movably mounted on said outstanding member, and

(*c*) means attachably securing said stop means to said outstanding member.

References Cited in the file of this patent

UNITED STATES PATENTS

600,856	Brinkman	Mar. 22, 1898
1,487,595	Petermann	Mar. 18, 1924
2,053,043	Patterson	Sept. 1, 1936
2,205,313	Stahl	June 18, 1940
2,746,447	Petch	May 22, 1956
2,777,438	Mangis	Jan. 15, 1957
2,779,324	Schlough et al.	Jan. 29, 1957
2,874,688	Biesanz et al.	Feb. 24, 1959
2,933,079	Gutting	Apr. 19, 1960

FOREIGN PATENTS

551,606	France	Jan. 11, 1923
835,611	France	Sept. 26, 1938