RE 24985

Aug. 26, 1958 R. F. RENKIN 2,848,975

METAL COATING APPARATUS WITH MOVABLY MOUNTED WIPING MEANS

Filed June 10, 1955 3 Sheets-Sheet 1

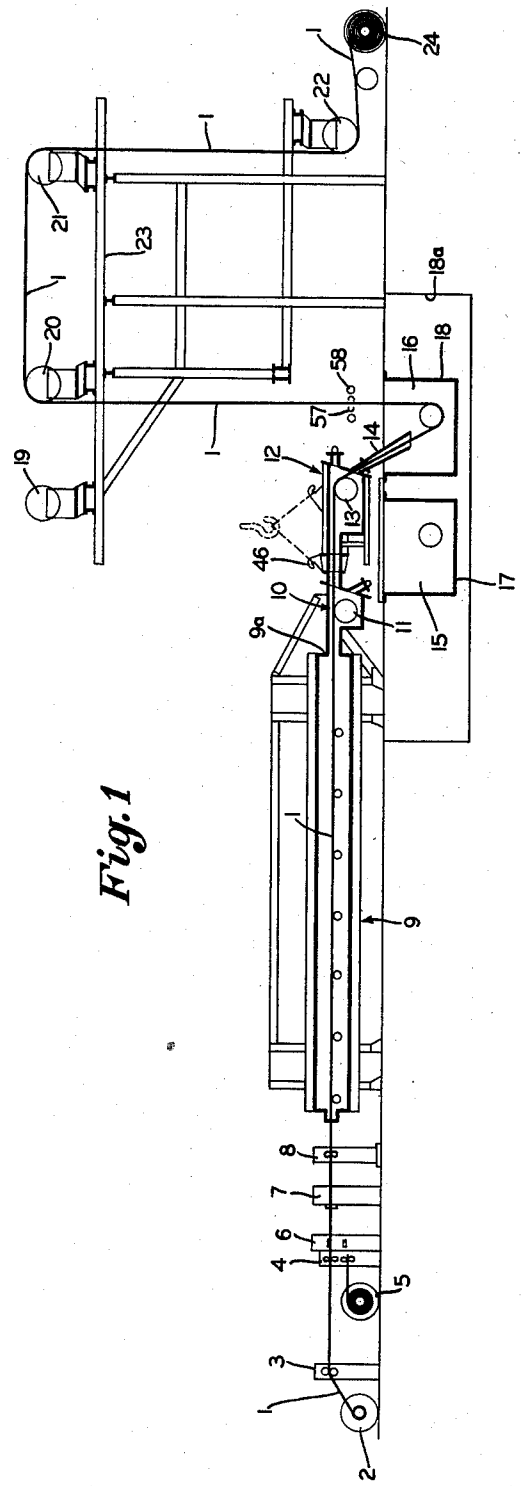

Fig. 1

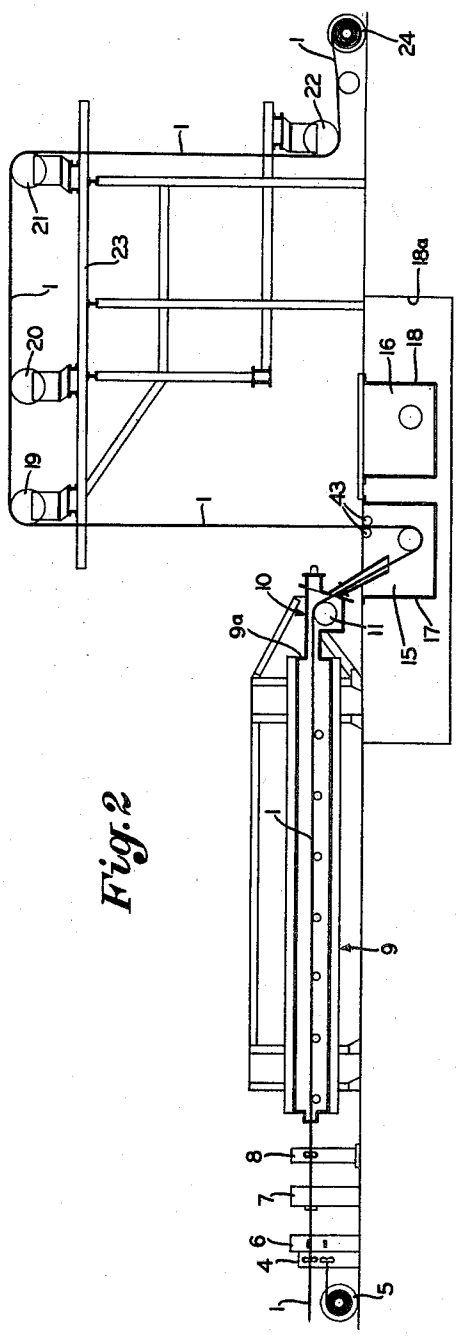

Fig. 2

INVENTOR.
Robert F. Renkin
BY Frease & Bishop
ATTORNEYS

Aug. 26, 1958 R. F. RENKIN 2,848,975

METAL COATING APPARATUS WITH MOVABLY MOUNTED WIPING MEANS

Filed June 10, 1955 3 Sheets-Sheet 2

Fig. 3

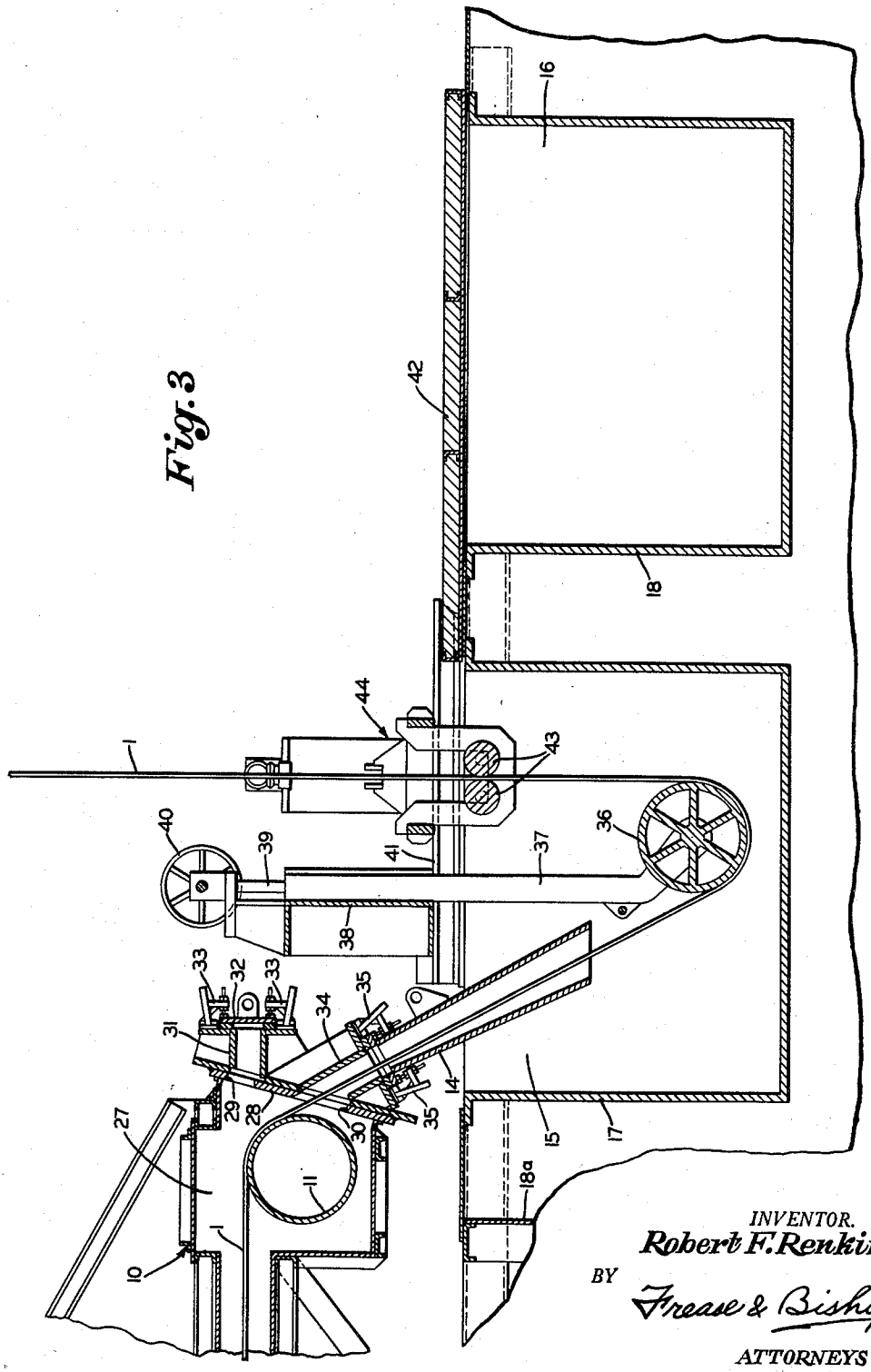

INVENTOR.
Robert F. Renkin
BY
Frease & Bishop
ATTORNEYS

Aug. 26, 1958 R. F. RENKIN 2,848,975

METAL COATING APPARATUS WITH MOVABLY MOUNTED WIPING MEANS

Filed June 10, 1955 3 Sheets-Sheet 3

Fig. 4

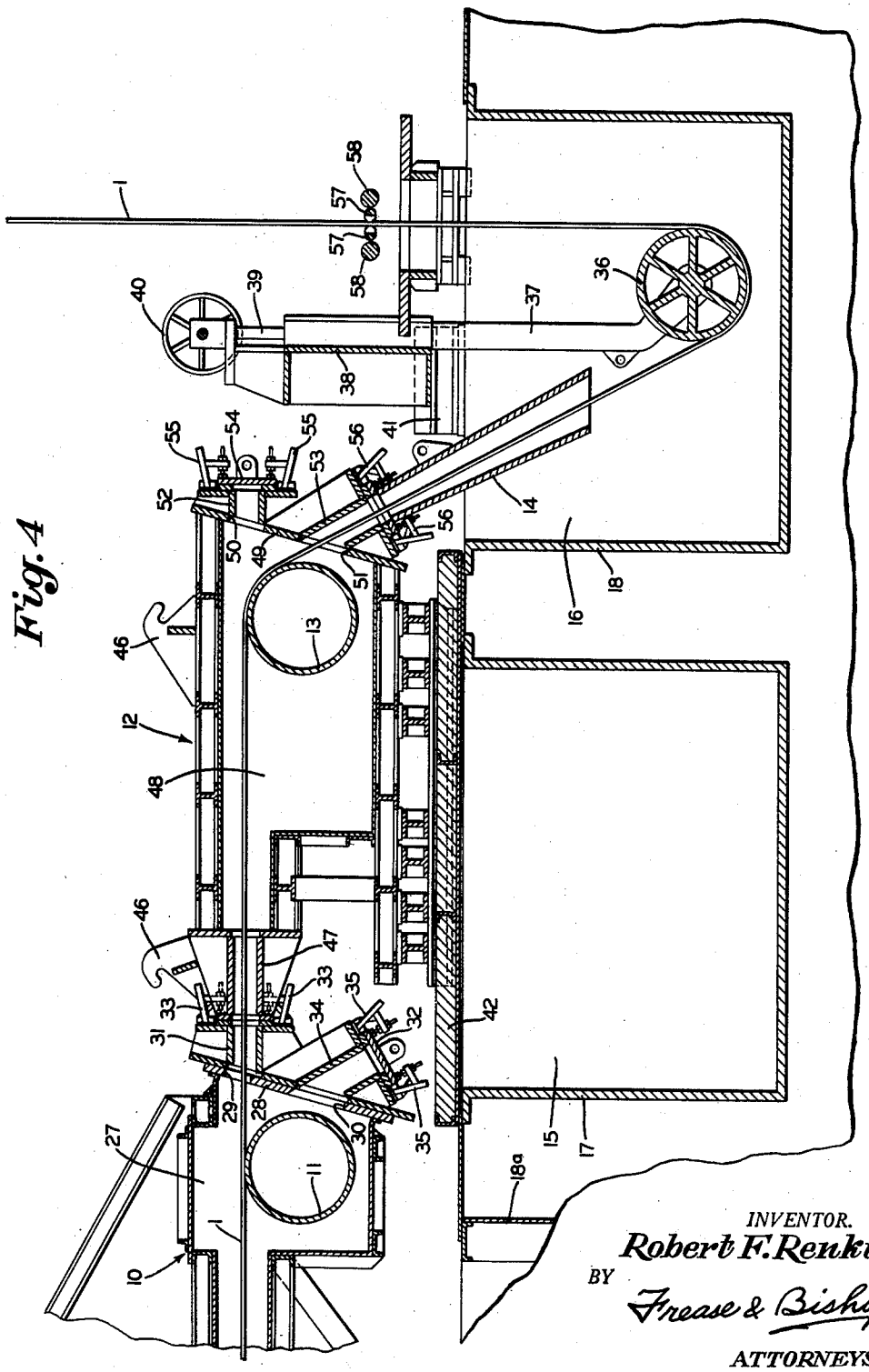

INVENTOR.
Robert F. Renkin
BY
Frease & Bishop
ATTORNEYS

United States Patent Office 2,848,975 Patented Aug. 26, 1958

2,848,975

METAL COATING APPARATUS WITH MOVABLY MOUNTED WIPING MEANS

Robert F. Renkin, Sharon, Pa., assignor to Sharon Steel Corporation, Sharon, Pa., a corporation of Pennsylvania

Application June 10, 1955, Serial No. 514,634

6 Claims. (Cl. 118—68)

This invention relates broadly to an apparatus for coating metal products and more particularly it pertains to the continuous hot metal coating of steel strip or wire products.

Ordinarily, an operating line for coating metal strip or wire includes a single hot metal coating container or pot containing the coating bath through which the strip or wire moves continuously during the coating operation. When it is desired to coat the strip or wire with another type of hot metal coating, it is necessary to change the hot metal in the coating pot in order to provide for the differently coated material.

In single-pot operation, such a change in the hot coating metal bath requires the hot metal in the pot to be pumped out of the pot and stored in some manner for future use. This storage may be accomplished by casting into suitable pigs for subsequent use or by pumping into a storage pot where the metal can be maintained molten.

After the hot metal has been pumped out of the pot, the pot must be cleaned insofar as it is possible to do so to remove coating metal, dross, impurities, etc. which would contaminate the new bath to be provided in the pot. However, it is substantially impossible to completely remove all such contaminants, and in normal operations, the new coating metal is introduced into the pot either as a solid or a molten bath and heated to a suitable temperature. The line may then be put in operation, but a period of time of such operation will elapse during which the newly provided coating will be contaminated by the former coating metal until an equilibrium has been achieved and bath additions made in order to provide for continuous operation with the newly selected coating formula.

Such a procedure is unsatisfactory because it is time-consuming and expensive. A changeover usually requires that the line be shut down for from thirty-two to forty-eight hours in order to remove and replace the molten coating bath metal. Further, after each changeover some metal strip is lost until the metal coating bath is balanced to standards required. Accordingly, great expense is entailed in loss of production and in the production of scrap material until the new coating satisfies required standards.

The construction of the present invention reduces to a minimum the time required to change over a line from operation to provide one type of metal coating to another. By using two or more aligned pots each containing a different hot coating metal bath, the line may be changed over from operation with one pot to another in a very short period of time. After the changeover is made, production of material coated in the newly-connected pot immediately satisfies required standards since no contamination is involved. Accordingly, there is little, if any, loss of material which has been coated; the only loss being material required for rethreading.

The use selectively of two or more aligned coating

pots creates another problem where the preparation of the surfaces of the strip for hot metal coating is carried out either in a gas pickling atmosphere or in a protective gas atmosphere. In either event, it is necessary to introduce the strip, after the preparation of the surfaces thereof has been completed, directly into the selected hot metal coating bath without any exposure to the atmosphere. Accordingly, in the operation of a coating line with different pots, each containing a different hot coating metal bath, it is necessary to provide further for the introduction of the material being coated directly without atmospheric exposure into any one of the coating baths from the confined chamber in which a gas pickling or protective gas atmosphere is maintained about the strip surfaces for surface preparation.

Accordingly, it is a primary object of this invention to provide a metal coating line that may be changed from operation with one hot metal coating material to another in a minimum of time.

It is another object of this invention to provide a number of pots of different hot coating metals through which the metal strip to be coated may be selectively continuously passed.

Another object of this invention is to provide a number of pots each containing a different hot metal coating material operable in conjunction with muffle means through which the strip is passed to accomplish proper metal surface preparation for coating.

Finally, it is an object of this invention to provide an improved hot metal coating apparatus which incorporates the foregoing desiderata in an inexpensive manner and with simplified maintenance and operation.

These and other objects and advantages apparent to those skilled in the art from the following description and claims may be obtained, the stated results achieved, and described difficulties overcome by the discoveries, principles, apparatus, parts, combinations, subcombinations and elements which comprise the present invention, the nature of which is set forth in the following statement, the preferred embodiments of which—illustrative of the best mode in which applicant has contemplated applying the principles—is set forth in the following description, and which is particularly and distinctly pointed out and set forth in the appended claims forming part hereof.

Generally, the nature of the present invention may be stated as including in continuous steel strip coating apparatus for coating strip material selectively with different hot coating metals, means for preparing the surfaces of the strip to be receptive of hot metal surface coating, a first pot containing one selected hot coating metal, a second pot containing another selected hot coating metal, means for heating the pots selectively to maintain coating metal molten therein, the pots preferably being aligned with the surface preparation means, a first hot coating metal wiping means adapted to be associated with the first pot, a second hot metal coating wiping means adapted to be associated with the second pot, pot cover means adapted selectively to cover either of the pots, and means for continuously passing strip material through said preparation means, and then selectively through one of said pots and its associated wiping means while the other pot is covered by said cover means.

Furthermore, the nature of the present invention includes, when the strip material surfaces are prepared to be coating receptive in a gas atmosphere, a muffle containing the selected gas atmosphere through which the strip is continuously passed, the muffle having an exit end, a first hot metal coating pot at the exit end of the muffle, a second hot metal coating pot spaced from the exit end of the muffle, said pots being aligned with the exit end of the muffle, tubular strip conveying means

detachably connected at one end to the exit end of the muffle and having its other end immersed in hot coating metal in said first pot, muffle extension means alternately connectable at one end with the exit end of the muffle, the tubular conveying means being alternately connectable with the other end of the muffle extension means to immerse an end thereof in the hot coating bath in the second pot.

In the drawings which are illustrative of the preferred embodiment of the invention, by way of example, and in which similar numerals refer to similar parts throughout:

Fig. 1 is a diagrammatic, side elevational view of a coating line, showing the metal strip passing continuously through a hot coating bath of one type of metal or composition;

Fig. 2 is a diagrammatic, side elevational view of the apparatus of Fig. 1, showing the metal strip passing through another bath of another type;

Fig. 3 is an enlarged, longitudinal, sectional view, showing the coating pot unit in detail with the metal strip passing through the one coating bath shown in Fig. 2; and

Fig. 4 is an enlarged, longitudinal, sectional view of the coating pot unit, showing the metal strip passing through the other coating bath shown in Fig. 1.

In Fig. 1 a metal strip **1** issues from an uncoiler **2** through a pair of driven pinch rolls **3** and a second pair of pinch rolls **4**. Between the pinch rolls **3** and **4** is mounted a stand-by uncoiler **5** in the usual manner. Adjacent the pinch rolls **4** is a shear stand **6** followed by a normally inoperative welding device **7** and pinch rolls **8** through which the strip **1** passes before entering a furnace, generally indicated at **9**. At the exit end **9***a* of the furnace the strip passes through a muffle, generally indicated at **10**, and over a roll **11** therein. From the muffle **10** the strip **1** moves through a muffle extension, generally indicated at **12**, and over a roll **13** therein. From the muffle extension **12** the strip **1** passes through a muffle tube or tubular downcomer **14** into one of two coating baths **15** and **16** within containers or pots **17** and **18**, respectively. The pots **17** and **18** are within a heated pit **18***a* below the floor line. The pit **18***a* may be heated by furnaces, not shown, in the usual manner to maintain the desired bath temperature in either pot **17** or **18**. From the coating baths the strip **1** moves upwardly over rolls **19** (Fig. 2), **20**, **21**, and **22** that are mounted on a cooling tower **23**. From the roll **22** the coated strip **1** is recoiled at a coiler **24**.

In Figs. 3 and 4 the improved coating pot unit of the present invention is shown more in detail. It includes at least the two coating pots **17** and **18** containing different hot coating metals and the muffle extension **12**. In Fig. 3 the strip **1** passes through the muffle **10** at the exit end **9***a* of the furnace **9**. The muffle **10** is airtight in order to preserve whatever gaseous atmosphere may exist within the furnace. The muffle **10** includes opposite side walls **27** between which is mounted the roll **11**. The end of the muffle **10** includes an end wall **28** having elongated upper and lower apertures **29** and **30** therein. The upper aperture **29** is aligned with the metal strip **1** issuing from the furnace **9**. The lower aperture **30** is positioned so that the metal strip **1** passes through the aperture **30** toward the bath **15** in the pot **17**.

Connected to the upper aperture **29** is a port **31** having a closure member **32** detachably secured by a clamp **33**. Similarly, a port **34** is secured to the lower aperture **30** which port is inclined along the path of travel along the metal strip **1** moving from the roll **11** to the coating bath **15**. The muffle tube **14** is detachably secured to the lower end of the port **34** by means of a clamp **35**. Thus, the lower end of the muffle tube **14** is immersed below the surface of the coating bath **15**, whereby the gaseous atmosphere within the furnace **9** and muffle **10** is preserved against contamination from the outside atmosphere.

In order to direct the metal strip **1** into and out of the bath **15**, a roll **36** is used. The roll **36** is vertically movable at the lower end of a roll mounting or support means **37** which is slidably mounted at its upper end within a bracket **38** at the upper end of which is a screw **39** actuated by a wheel **40**. The assembly of the bracket **38**, the screw **39** and the wheel **40** is mounted on a base **41** which extends across either pot **17** or **18**, as shown in Figs. 3 and 4. At the same time, a pot cover **42** is placed over the particular pot **17** or **18** which is not in use.

Each pot **17** and **18** contains a bath of a different hot metal coating material. For the purposes of illustration the molten metal coating bath **15** may be an ordinary bright zinc galvanizing bath maintained at the desired temperature in the heated pit **18***a*; and the molten metal coating bath **16** may contain a molten zinc base material which forms a coating suitable for difficult subsequent rolling, forming, drawing or stamping operations. Thus, at least two different molten coating baths are readily available for use when desired. However, other protective metal coating baths such as aluminum or terne may be substituted.

Over the pot **17** (Fig. 3) is also mounted a pair of exit wiper rolls **43** on roll support means, generally indicated at **44**, extending across the pot **17**. The metal strip **1** after passing through the bath **15** also passes between the wiper rolls **43** which are adjustable to control the coating thickness on the strip. As shown in Fig. 2, the strip **1** moves from the rolls **43** upwardly to the cooling tower **23** on and over the rolls **19**, **20**, **21** and **22**.

When the pot **18** is to be used, as shown in Figs. 1 and 4, the pot cover **42** is placed over the pot **17** and the muffle extension **12** is placed to bridge thereover, as shown, by means of a crane connected by cables in a conventional manner to lifting hooks **46**. Like the muffle **10**, the muffle extension **12** is an airtight chamber having a port **47** at one end connected to the port **31** on the muffle **10** by the clamps **33**. When this connection is made, the muffle tube or downcomer **14** is disconnected from the port **34** and the closure **32** is connected thereto (Fig. 4) by the clamps **35** in order to seal the interior of the muffle **10** against air leakage. The muffle extension **12** also includes opposite side walls **48** between which is mounted the roll **13**.

In addition, the muffle extension **12** includes an end wall **49** similar to end wall **28** on the muffle **10**. The end wall **49** is provided with upper and lower apertures **50** and **51**. To apertures **50** and **51** are connected ports **52** and **53**, respectively in a manner similar to the ports **31** and **34** on the end wall **28** of the muffle **10**. A closure **54** is mounted on the outer end of the port **52** by means of clamps **55**. The port **52** is aligned with ports **31** and **47** to thread the strip **1** through the furnace **9** and the muffle **10** and muffle extension **12**. To the lower end of the port **53** is attached the muffle tube or downcomer **14** by the clamps **56** so that the lower end of the tube **14** extends below the surface of the bath **16**, as was the case with bath **15** (Fig. 3) when the tube **14** was similarly mounted to the muffle **10**. In this manner the gaseous atmospheric condition within the furnace **9** extends not only into the muffle **10** but also into the muffle extension **12**, as well as the tube **14**.

In Fig. 4 the roll **36** is disposed within the bath **16** in order to direct the strip metal **1** into and out of the bath. Thus, the assembly of the roll **36**, the roll support **37**, and the bracket **38** is disposed over the bath **16** within the base **41** extending across the top of the pot **18** similar to the manner in which it is mounted over the pot **17** (Fig. 3).

Above the bath **16** is also disposed a pair of stationary wipes **57** which are preferably composed of asbestos and are backed up by a pair of spaced rolls **58**, for wiping the different hot metal coating contained in pot **18**. The metal strip **1** passes between the asbestos wipes **57** to

control the coating thickness on the strip 1. From the wipes 57 the strip 1 passes upwardly over the cooling tower 23 and over the rolls 20, 21 and 22 prior to being coiled at the coiler 24, as shown in Fig. 1.

Accordingly, the present invention provides a new apparatus for coating metal strip by which different hot coating metals may be substituted one for another with a minimum loss of time and expense; by which a protective atmosphere may be provided when desired for metal strip surface preparation; and which solves long-existing problems without requiring extensive redesign of existing apparatus.

It is apparent, although only two pots have been illustrated or described for selective use at the end of a strip steel hot dip coating line, that one or more additional pots containing other selected hot coating metal baths may be associated with the two pots illustrated; and any one of such pots selectively may be operated at any one time for the continuous coating of strip material. Furthermore, the benefits of the invention may be achieved by using the two-pot arrangement without the strip surface being prepared in a controlled gaseous atmosphere, since the strip may be wet pickled or cleaned and fluxed prior to entry selectively into one of the hot metal coating baths contained in the pots.

Finally, any one of the coating pots may be constructed and operated as shown in my Patent No. 2,557,764 wherein two different types of coating may be formed selectively from hot coating metals contained within one main pot.

In the foregoing description, certain terms have been used for brevity, clearness and understanding, but no unnecessary limitations are to be implied therefrom beyond the requirements of the prior art; because such words are used for descriptive purposes herein and not for the purpose of limitation and are intended to be broadly construed.

Moreover, the invention is not limited to the exact apparatus shown because the particular arrangement of the parts may be varied to provide other structural embodiments without departing from the scope of the present invention.

Having now described the features, discoveries and principles of the invention, the construction, operation and use of the improved mechanisms and the advantageous, new and useful results obtained thereby; the new and useful parts, elements, constructions, mechanisms, combinations, subcombinations, and arrangements, and mechanical equivalents obvious to those skilled in the art, are set forth in the appended claims.

I claim:

1. In apparatus for continuously hot coating metal strip selectively with different coating metals, means for preparing a coating-receptive surface on the surfaces of a strip, first pot means, a bath of one hot coating metal in the first pot means, second pot means, a bath of another hot coating metal in the second pot means, heating means for maintaining coating metal molten in at least one of the pot means, pot cover means for the pots removable to uncover the first or second pot means, first hot coating metal wiping means removably mounted on the first pot means when uncovered, second hot metal coating wiping means removably mounted on the second pot means when uncovered; and means for continuously passing strip metal through said surface preparation means, then selectively through the both of molten coating metal in one of said pot means, and then through the wiping means mounted on the last mentioned pot means while the other pot means is covered by said cover means.

2. In apparatus for continuously hot coating metal strip selectively with different coating metals, controlled atmosphere furnace means through which a metal strip is passed for preparing a coating-receptive surface on the surfaces of the strip, the furnace including a muffle having an exit-end, first pot means, a bath of one hot coating metal in the first pot means, second pot means, a bath of another hot coating metal in the second pot means, heating means for maintaining coating metal molten in at least one of the pot means, pot cover means for the pot removable to uncover the first or second pot means, a muffle tube extending from the muffle exit-end into the bath of molten coating metal in one of said pot means when uncovered, means removably mounting the muffle tube on the exit-end of the muffle, muffle extension tube means, means removably mounting one end of the muffle extension tube means on the exit-end of the muffle when the other pot means is uncovered, means mounting the muffle tube on the other end of the muffle extension tube means when said other pot means is uncovered, the muffle tube extending into the bath of molten coating metal in the other pot means when the latter is uncovered and when the muffle tube is mounted on the muffle extension tube means; and means for continuously passing strip metal through said controlled atmosphere furnace means, and then selectively through the muffle tube and the bath of molten coating metal into which one end of the muffle tube extends and contained in the uncovered pot means while the other pot means is covered by said cover means.

3. Apparatus as defined in claim 2 in which the furnace muffle exit-end is provided with first and second outlet ports, in which the muffle tube is connected with the first outlet port and extends into the bath of molten coating metal in one of said pot means when uncovered, and in which the muffle extension tube means is connected with the second outlet port when the muffle tube is connected to the muffle extension tube means and when the muffle tube extends into the bath of molten coating metal in the other pot means when the latter is uncovered.

4. Apparatus as defined in claim 3 in which a strip conveyor roll is mounted within the furnace muffle at the exit-end adjacent the first and second outlet ports, and in which the strip is passed over said conveyor roll and selectively through one of said outlet ports as the strip passes to the selected bath of molten coating metal into which one end of the muffle tube extends and contained in the uncovered pot means while the other pot means is covered by said cover means.

5. In apparatus for continuously hot coating metal strip selectively with different coating metals, controlled atmosphere furnace means through which a metal strip is passed for preparing a coating-receptive surface on the surfaces of the strip, the furnace including a muffle having an exit-end, first pot means, a bath of one hot coating metal in the first pot means, second pot means, a bath of another hot coating metal in the second pot means, heating means for maintaining coating metal molten in at least one of the pot means, pot cover means for the pots removable to uncover the first or second pot means, first hot coating metal wiping means removably mounted on the first pot means when uncovered, second hot coating metal wiping means removably mounted on the second pot means when uncovered, a muffle tube extending from the muffle exit-end into the bath of molten coating metal in the first pot means when uncovered, means removably mounting the muffle tube on the exit-end of the muffle, muffle extension tube means, means removably mounting one end of the muffle extension tube means on the exit-end of the muffle when the second pot means is uncovered, means mounting the muffle tube on the other end of the muffle extension tube means when said second pot means is uncovered, the muffle tube extending into the bath of molten coating metal and the second pot means when the latter is uncovered and when the muffle tube is mounted on the extension tube means; means for continuously passing strip metal through said controlled atmosphere furnace, then selectively through the muffle tube and the bath of

molten coating metal into which one end of the muffle tube extends and contained in the uncovered pot means while the other pot means is covered by said cover means, and then through the wiping means mounted on the uncovered pot means.

6. Apparatus as defined in claim 5 in which the pot means are aligned with the furnace means.

References Cited in the file of this patent

UNITED STATES PATENTS

1,924,142	Willauer	Aug. 29, 1933
2,159,297	Shover	May 23, 1939
2,197,622	Sendzimir	Apr. 16, 1940
2,375,434	Moise et al.	May 8, 1945

UNITED STATES PATENT OFFICE

CERTIFICATE OF CORRECTION

Patent No. 2,848,975 August 26, 1958

Robert F. Renkin

It is hereby certified that error appears in the printed specification of the above numbered patent requiring correction and that the said Letters Patent should read as corrected below.

Column 5, line 67, for "both of molten coating metal" read -- bath of molten coating metal --.

Signed and sealed this 18th day of November 1958.

(SEAL)

Attest:

KARL H. AXLINE

Attesting Officer

ROBERT C. WATSON

Commissioner of Patents