June 19, 1956 W. F. BROSKE 2,751,570

ELECTRICAL CONNECTOR

Filed Oct. 26, 1950 2 Sheets-Sheet 1

Fig.1.

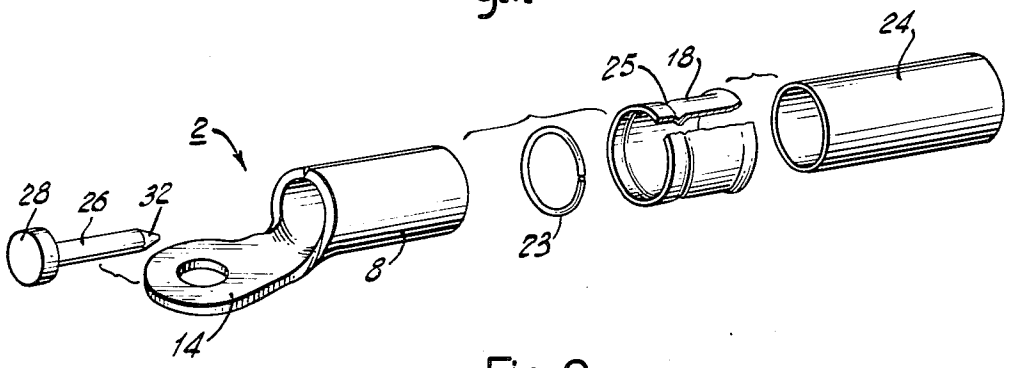

Fig.2.

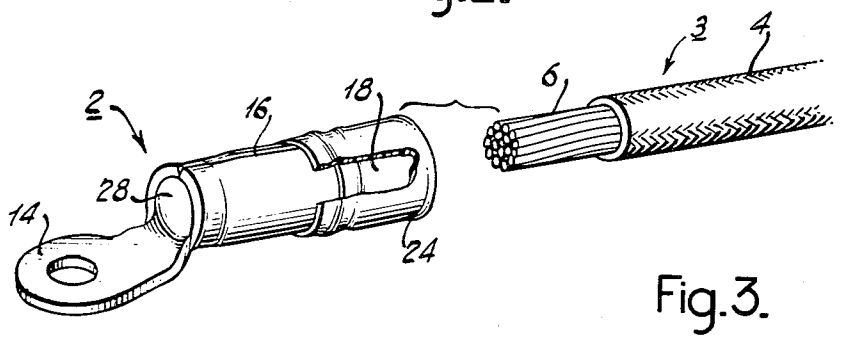

Fig.3.

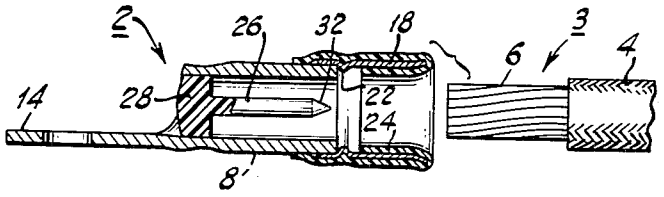

Fig.4.

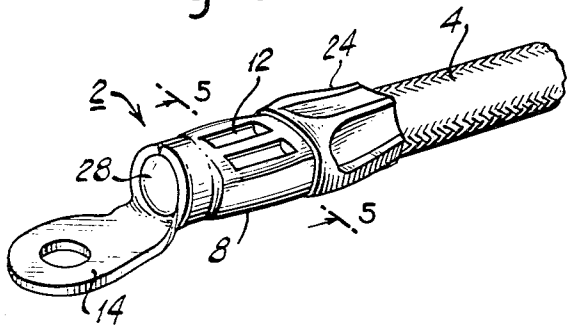

Fig.5.

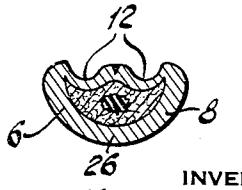

INVENTOR:
WILLIAM F. BROSKE.

BY
Curtis, Morris & Safford.
ATTORNEYS:

June 19, 1956 W. F. BROSKE 2,751,570

ELECTRICAL CONNECTOR

Filed Oct. 26, 1950 2 Sheets-Sheet 2

Fig.6.

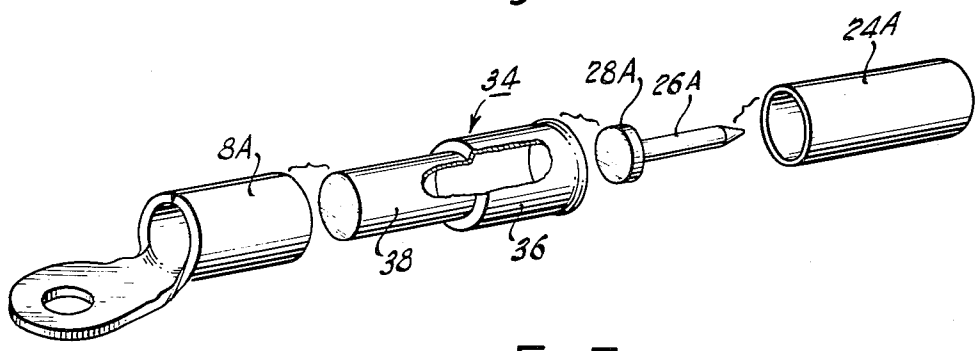

Fig.7.

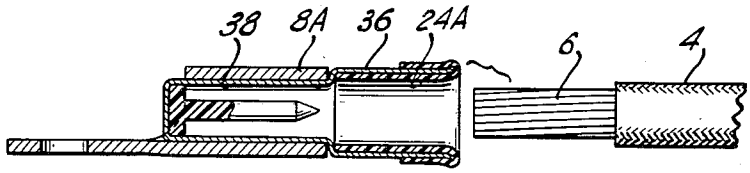

Fig.8.

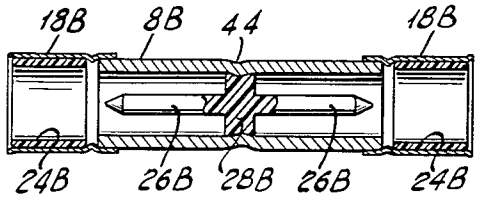

Fig.9.

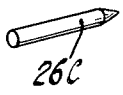

Fig.10.

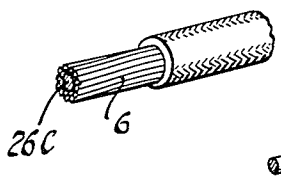

Fig.11.

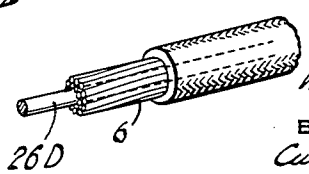

INVENTOR:
WILLIAM F. BROSKE.

BY
Curtis, Morris & Safford.
ATTORNEYS:

United States Patent Office 2,751,570 Patented June 19, 1956

2,751,570

ELECTRICAL CONNECTOR

William F. Broske, Harrisburg, Pa., assignor to Aircraft-Marine Products, Inc., Harrisburg, Pa., a corporation of New Jersey

Application October 26, 1950, Serial No. 192,188

11 Claims. (Cl. 339—223)

This invention relates to pressure-forged electrical connections, a method of making such connections, and connectors and wire for use in making such connections. The invention is described as embodied in a solderless-type connector particularly adapted for attachment to aluminum wire.

Aluminum wire, when used as an electrical conductor, to replace the more usual copper wire, has the advantage that an aluminum wire with the same current-carrying capacity as a given copper wire is substantially lighter in weight. Aluminum wire, therefore, is particularly desirable for use in aircraft.

However, there are serious disadvantages in the use of aluminum wire. For example, it is difficult to solder to aluminum, and the oxide layer which forms on the surface of aluminum is resistant to the flow of electric current. Moreover, certain portions of almost every electrical apparatus, on aircraft as well as other places, ordinarily is made of copper or copper alloy, as for example, the internal wiring of generators and motors, binding posts, and the like. When dissimilar metals, such as aluminum and copper, are in contact, electrochemical reaction tends to cause corrosion which reduces both electrical conductivity at the area of contact and the mechanical strength of the connection.

Thus, when solderless connectors, which make electrical connection by being crimped around the conductor and pressure forged together, are used with aluminum wire, the oxide film which forms on the aluminum tends to impair the intimacy of the forged connection and to increase the resistance of the electrical contact, and if the connector is made of copper, the subsequent electrolytic corrosion may further increase the resistance of the contact area. This latter difficulty is not overcome by making both the wire and the connector of aluminum, because this merely transfers the area of electrolytic corrosion to the junction of the connector and a binding post, or to some other part of the circuit where the aluminum makes contact with a dissimilar metal. Moreover, aluminum terminals do not overcome the problems resulting from cold flow of the aluminum and the formation of insulating oxide films on the aluminum surfaces.

In accordance with the present invention, a connector is provided that makes a firm pressure-forged connection with aluminum wire and which maintains the area of contact between the wire and connector under such continuous pressure as to prevent the re-formation of the oxide coating. Moreover, the contact area of the connector is sealed from the outside atmosphere to prevent the entrance of air, moisture, and other fluids which could promote corrosion.

In a preferred embodiment of the invention, a core of deformable resilient material is embedded in the wire strands that are to be crimped in a connector, so that the pressure exerted on the resilient material by the crimped connector compresses the material and extrudes it lengthwise. After the crimping operation is completed, the resilience and tendency to slower recovery by elastic

memory of the resilient material exert an expansive force which maintains the area of electrical contact under continuous pressure.

This arrangement has particular advantages for use with aluminum wire, but it has been found to be advantageous also in connection with copper and other wires. For example, a connector of a particular size has ordinarily been required for each size of wire, but the presence of the resilient core permits connectors of a single size to accommodate a number of wire sizes. Thus, when the connector is somewhat undersize, the resiliency of the core material prevents "necking off" or materially reducing the cross section of the wire by the crimping force, and when the connector is somewhat oversize, the core material is sufficiently resistive to deformation forces that suitable contact pressure is maintained.

Thus, one aspect of the invention relates to the crimping and sealing arrangement of the connector. Another aspect of the invention relates to the provision of a resilient core by which the continuous pressure is maintained on the contact area. Other aspects, objects, and advantages of the present invention will be in part apparent from, and in part pointed out in, the following description of a preferred embodiment of the invention and certain modifications thereof, considered in connection with the accompanying drawings, in which:

Figure 1 is an exploded perspective view of the components of a connector embodying the invention;

Figure 2 is a perspective view of the assembled connector and an electrical conductor ready to be inserted into the connector;

Figure 3 is a sectional view taken lengthwise of the connector shown in Figure 2;

Figure 4 is a perspective view of the connector shown in Figure 2 after being crimped to the electrical conductor;

Figure 5 is a sectional view taken along line 5—5 of Figure 4;

Figure 6 is an exploded perspective view of the component parts of another connector showing a modified form of construction;

Figure 7 is a sectional view of the connector of Figure 6 after being assembled;

Figure 8 is a sectional view of a connector adapted to connect the ends of two electrical conductors;

Figure 9 is a perspective view of a deformable resilient core for use with a solderless type connector;

Figure 10 is a perspective view of an electrical conductor with the resilient core shown in Figure 10 positioned centrally of the conductive strands; and

Figure 11 shows an electrical conductor, with portions cut away, having a deformable resilient core extending the full length of the conductor.

Figures 1 to 5 show a connector, generally indicated at **2**, which is to be attached to an electric wire **3** having an outer insulating covering **4** and a central stranded aluminum conductor **6**, as shown in Figure 2.

The component parts of the connector **2** are shown in Figure 1 and include a ferrule portion **8** which is adapted to be crimped around the aluminum strands **6**, as at **12** in Figure 4. A tongue portion **14** may be formed integrally with the ferrule portion **8** and is illustrated as of the type adapted to be connected to a binding post or the like. The tongue portion **14** does not of itself form part of the present invention and any desired conducting or connecting structure may be used in place of that illustrated. The tongue portion **14** and the ferrule **8** may be formed, for example, from a single piece of sheet copper, or other suitable metal, the ferrule portion **8** being formed by shaping the sheet metal into a substantially cylindrical form and brazing together the opposed edges, as indicated at **16** in Figure 2; the seam being

sealed by the brazing material and the interior left free from any sharp valleys so that the seam does not provide any openings into or adjacent the contact area when crimped. Alternatively, the ferrule 8 can be formed from seamless tubing.

In order to crimp the connector 2 around the insulation and seal one end of the ferrule 8, an insulation-supporting sleeve 18 is brazed, as at 22 in Figure 3, or formed integrally with, or otherwise secured to the end of the ferrule portion 8. This brazing operation is performed conveniently by means of a ring 23 (Figure 1) of brazing material which is placed within the sleeve 18 against an internal annular shoulder 25, so that when the end of sleeve 18 is pushed over the end of the ferrule 8, the ring 23 is held between the end of the ferrule 8 and the adjacent surface of the shoulder 25. Upon subsequent heating, the brazing material forms an effective seal between the insulation-supporting sleeve and the ferrule. The sleeve 18 preferably is formed, of relatively soft copper or similar material, with its internal diameter a close fit to the outside of the ferrule 8. This insulation-supporting sleeve 18 is adapted to be crimped into fluid tight engagement around the insulating covering 4 of the wire 3. The plastic insulation 24 on the sleeve 18 limits the exposed metal in the connection to the part of the ferrule 8 which is crimped when applied to the wire; and this plastic, when sleeve 18 is crimped, aids in assuring a fluid-tight seal. For this purpose, a plastic tube 24 of Vinylite, or other plastic material such as nylon, Saran, etc., is provided over the outside of the sleeve 18 and its outer end is folded back into the end of the sleeve to form a plastic lining for a sufficient distance to protect against electrical creepage and to provide the desired fluid-tight seal.

If the ferrule portion 8 were merely crimped to the bared aluminum wire by the usual procedures, any relaxation of the ferrule in the crimped area, either when the crimping tool is removed or at a subsequent time, would allow the wire strands to open minute cracks between them, and these would permit oxygen and/or moisture to reach into contact area where the deformation during crimping had broken the oxide coating and to re-form such coating, thus increasing the contact resistance of the connector. Moreover, the aluminum wire tends to cold flow when subjected to the crimping forces, and this cold flow, which continues after the crimping operation is completed, impairs the electrical contact. In order to maintain sufficient pressure on the aluminum strands 6 to sustain the good electrical contact and prevent the penetration of the oxide film, a deformable resilient material is positioned in the ferrule 8 with the aluminum strands 6. This resilient material is compressed when the ferrule 8 is crimped to the aluminum strands, and in spite of any spring-back of the ferrule when released, or subsequent cold flow of the aluminum, it still exerts sufficient expansive force within the ferrule to insure maintenance of a good solid contact. To this end, the resilient material should be such as to expand its cross-sectional area at the crimp substantially more than the resilient expansion of the cross-sectional area bounded by the exterior surface of the crimped ferrule. This can be accomplished, for example, by a core 26 of nylon plastic, which, in the embodiment illustrated, is formed integrally with a head portion 28 that is sealed and secured into the end of ferrule 8 by crimping the ferrule thereon. The head portion 28 thus forms a fluid-tight seal at the end adjacent the tongue 14 and supports the core 26 so that it extends longitudinally within the bore of the ferrule 8.

The head portion 28 is advantageously crimped to the ferrule 8 by an elliptical confined crimp, especially by means of the dies and crimp shape described by Holtzapple in U. S. application Serial Number 73,946, filed February 1, 1949. Only a slight reduction in the diameter of the ferrule 8 is required to form a very tight seal so that the end of the ferrule portion retains a substantially cylindrical shape, with relaitvely little difference between the major and minor axes of its elliptical cross-section. The crimp indentation, visible on the outer surface of the ferrule 8, is made to extend beyond the inner edge of head 28 so that it serves as an index for the operator when the ferrule 8 is crimped to the wire, and will assure that the dies for the latter crimping operation will be positioned beyond the head 28 of the core 26 in proper relationship to the inserted wire.

The end of the nylon core 26 is wedge-shaped, as at 32, i. e., sloped toward a narrow edge or point, so that when the stranded conductor is inserted into the ferrule 8, the central strands will be forced apart and the core 26 will penetrate into the wire. When the ferrule 8 is crimped onto the strands 6, the nylon core 26 is compressed and after the crimping operation is completed, the nylon core 26 tends to expand and maintains sufficient pressure on the strands that good solid contact is assured.

If desired, the core 26 may be formed in other shapes, for example, with a square, rectangular, or other shaped cross-section. The core, for example, may be conical in shape and still provide the desired resilient characteristics, but the illustrated shape is to be preferred because the cross-section of wire ferrule and core in the crimp area can be more accurately predetermined, and because the operator can feel when the ends of the aluminum strands have seated against the head 28, or end of the ferrule, thus assuring that in each instance the wires will be inserted far enough to secure a good connection.

The ferrule 8 as shown is crimped to the aluminum strands by dies which produce the configuration shown at 12 in Figure 4, which is described by Freedom in U. S. Patent No. 2,535,013 December 19, 1950, because this configuration more than any other now known maintains pressure on the wire after release from the crimping dies. A typical cross-section of the ferrule 8 and core 26 after being crimped to the aluminum strands 6 is shown in Figure 5.

When the connector 2 is used with aluminum wire, for which it is particularly adapted, electrolytic corrosion may result from the contact between the dissimilar metals. This corrosion can be inhibited and the re-formation of the aluminum oxide film can be minimized if the contact areas in the connection are protected from air and moisture. For this purpose both ends of the connector are sealed and at the same time the air is squeezed out of at least the part of the ferrule in which the contact occurs. The nylon head portion 28 may be used to seal one end of the connector, and the plastic coated sleeve 18 may be crimped around the insulating covering 4 to seal the other end of the connector, as shown in Figure 4. For the latter purpose, I have found most advantageous a crimp of the type shown in Figure 4, and which is described in U. S. Patent 2,359,083.

The use of a thin plastic mass in the ferrule 8 is recommended to aid in the expulsion of air when the connection is crimped, and this may be a mixture containing conductive particles adapted to cut through the oxide layer on the wire, for example, as described by Willmore in U. S. Patent 1,863,429. A mixture of nickel filings in a high temperature grease, especially in silicone grease or a non-fusible jell of bentonite in paraffin oil or petrolatum (e. g. that sold as Alum-A-Coat) shows surprising advantage for this purpose. Such greasy composition is supplied in the ferrule so that when the wire is inserted and the ferrule crimped, the grease is extruded around the strands, expelling air, and when the crimp is completed, the grease fills such spaces remaining in the ferrule which would otherwise contain air where it could re-oxidize the freshly cleaned contact areas. In addition, when the connector is crimped the grease is forced between the strands of aluminum wire for a considerable distance beyond the end of the connector providing further protection against corrosive action.

This improvement is the invention of Frank H. Wells and is further described and claimed by him in his application Serial No. 358,190, filed May 28, 1953, and therefore is not claimed in the present application.

When the ferrule **8** is crimped around the wire strands, radial force is exerted on the core **26**, which must have sufficient tensile and shear strength so that when it is deformed it will not be fractured or pinched off, and has such resiliency that it will exert the desired pressure after crimping. I have found that fiber-forming plastics are particularly desirable in that they are capable of cold drawing beyond their elastic limit without loss of strength and even with an increase of strength. The property of elastic memory exhibited by such plastics is also valuable to assure the maintenance of the expansive force in the contact area in spite of any cold flow of the aluminum that would otherwise reduce the contact pressure.

When the radial compressive force is applied to the core, there is substantial axial extrusion of the core accompanied by an axial restoring force by which adequate radial force is exerted on the wires to maintain the necessary pressure over the area of contact. This change in axial length permits the core material to maintain substantially maximum pressure even though the cross-sectional area within the ferrule **8** is increased by the elastic return of the metal ferrule after completion of the crimping operation.

The nylon core, for example, may be hexamethylene diamine adipic acid such as grades FM–3001, FM–3003, FE–1056, and FM–10,001, sold by E. I. du Pont de Nemours and Co. Other material may be utilized to replace the nylon core, provided it meets the requirements for resiliency and/or elastic memory such that it will exert the desired force on the wire strands after crimping. The particular resilient material selected will depend in part upon the expected conditions of use. For example, the core material must retain its resilient expansive force at the highest temperature at which the connector is to be used. If nylon is utilized for the core, the highest temperature to which the connector is subjected must be below the molding temperature of the nylon composition used. Methyl methacrylate plastic, such as is sold under the tradenames "Lucite" or "Plexiglas" may be used for the core provided the connector will not be subjected to temperatures above the softening point of the plastic. Such a core molded at a temperature of 270° F. was found to be satisfactory for most applications. Such clear plastic has the advantage that it may permit visual determination of the effectiveness of the crimping operation. Other plastic materials such as vinylidine chloride copolymer resins can be used depending upon the particular connector construction employed and upon the conditions to which the completed connector is exposed. However, I find that there is marked advantage in the use of nylon with its higher melting point and its excellent resiliency and recovery properties.

The dimensions of the core **26** are not critical, except that its resilient expansion of the cross-sectional area after such deformation as it receives when crimped should be greater than the increase in cross-sectional area of the bore in the crimped section of the ferrule upon release from the crimping dies. The volume of the core must be sufficient to maintain the desired internal pressure after the normal relaxation of the crimped ferrule.

It is apparent that the connector **2** can be utilized to form an excellent connection with wires formed of material other than aluminum, and that the characteristics of the terminal which enable it to provide a good connection with aluminum are also advantageous with other metals whether they are similar to or different from the metal of which the connector is formed. A connector constructed in accordance with the above example and attached to an aluminum wire showed substantially no change in connection resistance after a prolonged accelerated life test, whereas an aluminum connector of the best grade obtainable showed a resistance increase of 300% when tested under comparative conditions.

Figures 6 and 7 show another construction of the connector, certain of the components in these views corresponding to similar components shown in the earlier figures being designated by similar reference characters followed by the suffix "A." In this example, a generally cup-shaped thimble, generally indicated at **34**, is drawn from thin sheet metal, for example copper, and is provided with an insulation-supporting portion **36** and a ferrule insert portion **38**, having a smaller inside diameter than the insulation-supporting portion **36** substantially in accordance with the U. S. Patent 2,385,792 of Carlson. The resilient core **26A**, of nylon or other suitable material, is held in position within the ferrule insert portion **38** of the thimble **34** by its head portion **28A**, which, for example, is press fitted into the thimble **34** against the closed end thereof, as shown in Figure 7 The ferrule insert portion **38** of the thimble is maintained in position within the ferrule **8A** by frictional contact therewith. The insulation-supporting portion **36** of the thimble **34** is covered with a plastic sleeve **24A**, as in the first embodiment. In this example, one end of the contact area of the connector is sealed by the end of the thimble **34**, instead of the plastic head portion, and because the thimble **34** is continuous throughout the length of the connector, the seal does not depend upon the crimp around the head **28** and the brazing operations which secured the ferrule seam **16** and joined the ferrule and insulation-supporting sleeve at **22** in the first example.

The aluminum wire strands **6** are positioned around the resilient core **26A** and the ferrule is crimped around the wire, as in the first example, and the insulation-supporting portion **36** is crimped around the outer covering of the insulation, electrical contact being made through the intervening ferrule insert portion **38**.

Figure 8 shows a connector similar to the ones shown in Figures 1 to 5, but which is adapted to connect the ends of two lengths of wire, certain parts corresponding to those shown in the earlier views being referred to by similar reference characters followed by the suffix "B." A ferrule **8B**, which is substantially cylindrical in shape and open at both ends, supports at its center a plastic head portion **28B**, for example by being crimped thereto as indicated at **44**. The head portion **28B** is provided with two oppositely extending cores **26B** of resilient material. Insulation-supporting sleeves **18B** are secured to each end of the ferrule **8B** and are provided with plastic sleeve coatings **24B**. The ends of the electrical conductors are inserted in opposite ends of the connector and attached by crimping in the manner set forth in connection with Figures 1 to 5. This connector may be used to connect aluminum wires to copper wires, or to make connection between two aluminum wires, or between wires of other metals. When this connector is used to connect wires formed of dissimilar metals, the head portion **28B** forms an insulating barrier between the two halves of the connector and further inhibits corrosive action within the terminal.

The connectors shown in Figures 3, 7, and 8 have the advantage that all of the components of the connector are fastened together prior to the crimping operation, so that the connectors can be easily handled and so that it is not necessary to assemble the component parts at the time the connectors are crimped to the wire. However, if desired, the resilient core **26** may be fabricated separately from the connector, as shown at **26C** in Figure 9, so that before the connector and wire are assembled the core **26C** is inserted into the center of the aluminum strands **6**, as shown in Figure 10.

Alternatively the aluminum wire may be formed with a resilient core **26D** as shown in Figure 12. This core

26D may be of nylon, Saran, Vinyon, high tensile resilient vulcanized rubber, or other material which is compressed under the crimping force of the connector and which will maintain the desired pressure on the area of contact in the connector. Such core may be a single coarse strand or may be tightly spun from many fine strands, depending upon the flexibility required of the wire. The core 26D extends throughout the length of the conductor.

The wire formed in this manner may then be used with connectors of the type shown in Figure 7, from which the core 26A has been omitted, or it can be used advantageously with solderless connectors of other types where its resilient characteristics will provide an improved electrical connection. The presence of the resilient core imparts added rigidity and tensile strength to the wire and prevents the possibility of damage to the aluminum strands at points where the insulating covering is subjected to external forces, as by supporting clamps or crimped connectors.

It is thus seen that I have provided a connector that is well adapted to attain the ends and objects hereinbefore set forth, that is tightly sealed to keep out air and moisture, thus reducing oxidation and electrolytic corrosion, which maintains the electrical contact area under continuous pressure so as to maintain excellent electrical contact, which eliminates the necessity for greasy compounds or metal particles in the connector, and yet can be used with them to advantage, and which is convenient and easy to use. The separate features of the connector are such that they can be economically manufactured by conventional production techniques and the connector is subject to a variety of modifications so that it can be designed and adapted to best suit the conditions of each particular use. It is to be understood that the description and illustrations set forth herein are for the purpose of setting forth the principles of the present invention to permit such modifications by those skilled in the art, and are not exhaustive so as to exclusively limit the invention.

I claim:

1. In a solderless connector for making a mechanical and electrical connection to a wire, the combination comprising a wire-receiving ferrule portion, and a solid core of non-conductive resiliently deformable material secured to and positioned within said ferrule and extending lengthwise thereof, whereby said core being spaced to receive at least a part of a wire between it and a contact area of the inner face of the ferrule, said core is compressed by the wire when said ferrule is crimped around a wire inserted therein and the area of contact between said wire and said ferrule is maintained under continuous pressure by the resilient properties of said core.

2. In a solderless connector for making a mechanical and electrical connection to a wire, the combination comprising a ferrule, a core of compressible resilient material positioned within and secured to said ferrule and extending lengthwise thereof, and a head portion on and supporting said core and itself supported in position by said ferrule, said core having greater cross-sectional resiliency than said ferrule, whereby said core is compressed by the wire when said ferrule is crimped around a wire inserted therein between it and the core and the area of contact between said wire and said ferrule subsequently is maintained under continuous pressure by the resilient properties of said core.

3. In a solderless connector for making a mechanical and electrical connection to a stranded wire, the combination comprising a tubular ferrule adapted to be crimped upon the wire, and an insert of resilient material having core and head portions, said ferrule surrounding and being in fluid-tight engagement with said head portion, said core being supported by said head portion and extending lengthwise along the central portion of said ferrule, one end of said core being wedge-shaped to facilitate the entrance of a wire into said ferrule with its strands between said core and the inner walls of the ferrule, the elastic return of said core upon the release of cross-sectional compressive forces being greater than the elastic return of said ferrule.

4. In a solderless connector for making a mechanical and electrical connection to a wire, the combination comprising a tubular ferrule, a core of compressible resilient material between which and the inner face of the ferrule the wire is to be located, said core extending lengthwise within said ferrule and having a head portion at one end and a wedge-shaped portion at the other end, said ferrule surrounding said head portion near one end of said ferrule and forming therewith a first fluid-tight seal, an insulation-supporting sleeve having a resilient lining and extending from the opposite end of said ferrule, said sleeve being arranged to be crimped around the insulating covering of a wire extending into said ferrule to form a second fluid-tight seal, whereby when said core is compressed by said ferrule when it is crimped around a bared portion of said wire, the area of contact between said wire and said ferrule is maintained under continuous pressure by the resilient properties of said core and protected from the outside atmosphere by the fluid-tight seals.

5. In a solderless type connection between a wire and a connector formed of electrolytically dissimilar metals, the combination comprising a length of wire having a plurality of central aluminum strands and an outer insulating covering, a substantially cylindrical ferrule portion, a connector portion secured to said ferrule portion, a substantially nail-shaped nylon insert extending lengthwise within said ferrule, said ferrule engaging said insert at the end of said ferrule nearest said connector and forming therewith a first fluid-tight seal, said aluminum strands being distributed in the space between said nylon insert and the inner surface of said ferrule, said ferrule being crimped around said strands so as to exert a compressive force on said nylon insert, a metal insulation-supporting sleeve brazed to the end of said ferrule opposite said connector portion, and a plastic lining extending at least over the inner surface of said insulation-supporting sleeve, said insulation-supporting sleeve being in fluid-tight constrictive relationship to said insulating covering, whereby the interior of said ferrule is completely sealed from the outside atmosphere.

6. In a solderless type connection between a wire and a connector formed of electrolytically dissimilar metals, the combination comprising a length of wire having a plurality of central aluminum strands and an outer insulating covering, a substantially cylindrical ferrule portion, a connector portion secured to said ferrule portion, and a substantially nail-shaped nylon insert extending lengthwise within said ferrule, said aluminum strands being distributed in the space between said nylon insert and the inner surface of said ferrule, said ferrule being crimped around said strands so as to exert a compressive force on said nylon insert, whereby continuous force is maintained on the area of contact between the aluminum strands and the ferrule.

7. A solderless type connector comprising a tubular ferrule, a cup-shaped metal thimble of bendable metal having one open end and one closed end, a portion of said thimble extending into said ferrule, a deformable resilient core supported by said thimble and extending lengthwise thereof within said ferrule, and a plastic lining on the inner surface of said thimble outside said ferrule, whereby an insulated wire having a bared end portion may be inserted in said thimble and the ferrule crimped around the bared portion of the wire to provide electrical contact between the connector and the wire, the thimble being crimped around the insulating covering of the wire to form a fluid-tight seal.

8. A solderless type connector for joining two lengths of wire comprising a ferrule, and an insert of resilient

material having a head portion secured to the inner surface of said ferrule and oppositely extending cores supported by said head portion in such relation to the ferrule that the wires to be connected must be located between said cores and the inner face of the ferrule, whereby the wires to be connected may be inserted in opposite ends of the ferrule and the ferrule crimped around each of the wires, thereby forming good electrical connections that are maintained under continuous pressure by the resilient cores.

9. In an electrical connection the combination comprising a wire conductor, a connector including a ferrule crimped to and having an area of electrical contact with said wire, and means positioned within the outer surface of the conductor tending to urge the conductor outwardly against the crimped area, whereby the crimp and the means tending to expand the conductor outwardly cooperate to secure the conductor to the ferrule.

10. The device of claim 9 wherein the means tending to urge the conductor outwardly is of a material having greater resiliency than the conductor or the ferrule.

11. The device of claim 9 wherein the means tending to urge the conductor outwardly constitutes an elastic member extending longitudinally of the conductor.

References Cited in the file of this patent

UNITED STATES PATENTS

2,002,739	Herkenberg	May 28, 1935
2,004,972	Bassett, Jr.	June 18, 1935
2,020,819	Bell	Nov. 12, 1935
2,081,047	Basch	May 18, 1937
2,165,323	White	July 11, 1939
2,240,579	Schumacher et al.	May 6, 1941
2,304,194	Payne	Dec. 8, 1942
2,339,147	Carlisle et al.	Jan. 11, 1944
2,353,732	Kingsley	July 18, 1944
2,456,015	Orser	Dec. 14, 1948
2,480,280	Bergan	Aug. 30, 1949
2,533,200	Rogoff	Dec. 5, 1950
2,535,013	Freedom	Dec. 19, 1950
2,551,299	Sowa	May 1, 1951

FOREIGN PATENTS

677	Great Britain	of 1915
216,790	Switzerland	Jan. 5, 1942
718,843	Germany	Mar. 2, 1942