Feb. 14, 1961 J. J. GALBIERZ 2,971,681

DISPENSING TYPE CLOSURE

Filed Jan. 31, 1957 2 Sheets-Sheet 1

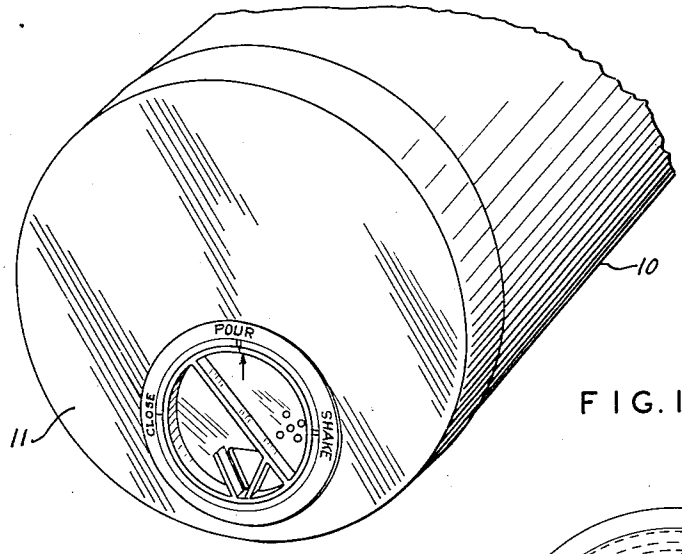

FIG. 1.

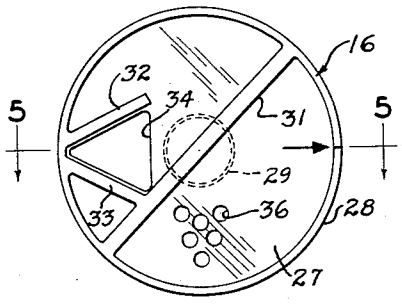

FIG. 4

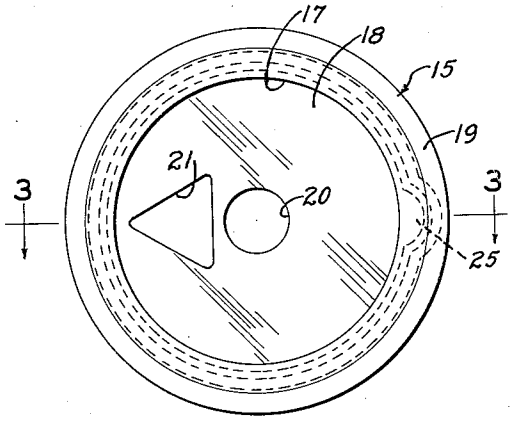

FIG. 2.

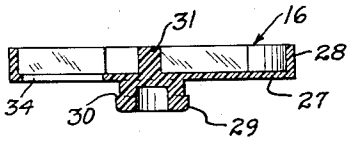

FIG. 5.

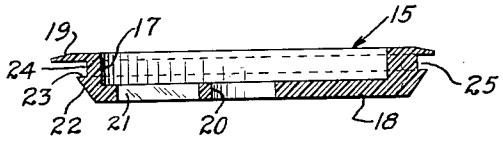

FIG. 3.

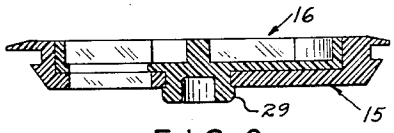

FIG. 6.

INVENTOR.
JEROME J. GALBIERZ
BY
Laurence M. Goodridge
ATTORNEY

Feb. 14, 1961 J. J. GALBIERZ 2,971,681

DISPENSING TYPE CLOSURE

Filed Jan. 31, 1957 2 Sheets-Sheet 2

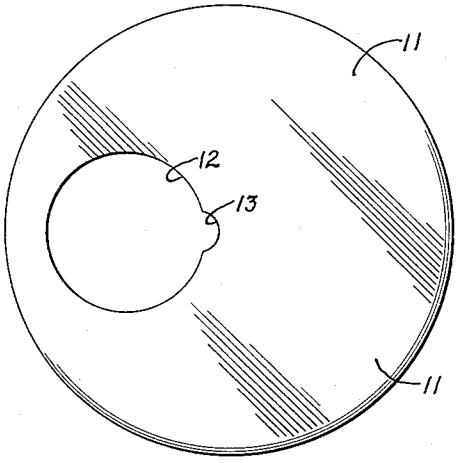

FIG. 7.

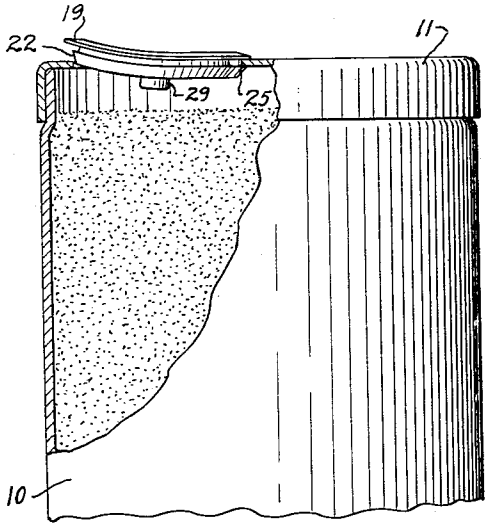

FIG. 8.

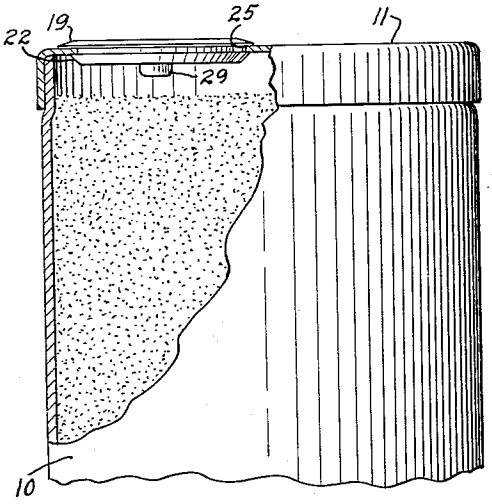

FIG. 9.

INVENTOR.
JEROME J. GALBIERZ
BY
Lawrence M. Goodridge
ATTORNEY

United States Patent Office 2,971,681 Patented Feb. 14, 1961

2,971,681

DISPENSING TYPE CLOSURE

Jerome J. Galbierz, Glendale, Mo., assignor to R.C. Can Company, Overland, Mo., a corporation of Missouri

Filed Jan. 31, 1957, Ser. No. 637,459

3 Claims. (Cl. 222—548)

This invention pertains to dispensing type closures for use on cans and, more specifically, to closures incorporating a pour spout or openings for shaking out the contents of the can, or both.

Closures of this type are in general use for cans containing a fluid-like product, and the improvements of the instant invention will be better understood by a brief description of the prior structures.

These dispensing closures are generally formed of two metal or two rigid, molded plastic parts, which can be conveniently described as an under closure and a turn top. The under closure is a short, cylindrical body with a closed end and an external flange at its open end. A triangular-shaped dispensing opening is located at one side in its closed end.

Rotatably retained in the internal cavity of the short, cylindrical body of the under closure is a turn top usually formed with a recessed knob or bar and dispensing openings for shaking out or pouring out the contents. The position selected by turning the knob determines the open or closed positions of the closure.

The described closure has attained substantial use on salt cans, for example. These usually have a spirally wound paper body with paper ends telescoped thereon and secured by adhesive.

During the packaging, the body and one end are assembled, the container filled, and the top end, having the dispensing closure already fixed therein, placed on the body and secured. Fixing the closure in the top can end is a preliminary step performed in complex machines which unite the dispensing closure with the edges of a suitable opening in the top end by crimping the metal onto the edge of the opening if the closure is of metal, or heat-sealing the closure to the edge of the opening if the closure is a thermoplastic.

It will be readily apparent, therefore, that the packager must obtain suitable machinery to assemble the can—that is, place the top end on the can body after the product has been placed in the can. This machinery is expensive, and not within the reach of the smaller packager. A larger market for this type of can exists if there were no need for expensive packaging machinery.

It is the object of this invention to simplify the packaging operation by using a new type of dispensing closure according to this invention, and thereby expand the market for this type of can and closure.

According to this invention, the dispensing closure is constructed of pliable material, so that it has built-in ductibility. The material and the novel construction permits insertion of the dispensing closure into the hole in the top can end after the can is completely assembled, and insures a tight, locking fit of one within the other, thus simplifying the packaging steps.

This change makes it possible for the can manufacturer to merchandise the can to the packager already assembled. The packager fills the can with his product through the hole in the top end in the usual type of packaging

machinery for this purpose, and then inserts the pliable dispensing closure by hand or by a simple machine.

The closure has means for indexing its proper position within the opening engaging with corresponding means formed in the edge of the opening in the top end by inserting the means on the edge of the closure against this edge of the opening. A lip formed around the closure under body flexes as the opposite edge of the closure is forced into the opening, due to the pliability of the material, without distorting the edge of the opening in the can top end, and then engages into snug gripping engagement with the upper and under side surfaces thereof.

The device described in detail hereinafter may take various forms. By way of example, one of these forms is illustrated in the accompanying drawings, in which:

Fig. 1 is an environmental view, in perspective, showing an assembled can with closure.

Fig. 2 is a top plan view of the under closure.

Fig. 3 is a vertical sectional view taken along the line 3—3 of Fig. 2.

Fig. 4 is a top plan view of the turn top.

Fig. 5 is a vertical sectional view taken along the line 5—5 of Fig. 4.

Fig. 6 is a vertical sectional view of the assembled closure.

Fig. 7 is a top plan view of an assembled can without the closure and ready for filling.

Figs. 8 and 9 are side elevational views of a can partly in section, illustrating the steps in assembling the closure on the can after filling.

Closure structure

In the following detailed description, like parts are indicated by the same reference characters.

In Fig. 1 the can illustrated is a closed container with a dispensing type of closure constructed according to this invention. The can itself has a spirally wound paper body **10** with a flanged top end of paper such as **11**, and a bottom end (not shown) formed in the same manner and of the same material. Both ends are adhesively secured to the can body. According to this invention, the can is sold to the packager in assembled condition, ready to be filled, as in Fig. 7, through a suitable opening **12** notched at **13** to index the position of the dispensing closure.

Figs. 2 through 6 illustrate the details of the closure applied to the can.

The dispensing closure is preferably formed in two parts, an under closure **15** and a turn top **16**. Figs. 2 and 3 illustrate the construction of the former, and Figs. 4 and 5 the latter.

The under closure is preferably a short cylinder **17** with a bottom wall **18** and tapered flange **19** around its open end. The bottom wall has a central hole **20** and a dispensing opening **21**, which is preferably of triangular shape. Around the bottom end of the cylindrical body **17** is a beveled flange **22** formed with an upwardly facing, abrupt shoulder **23** opposite the under side of the flange **19**. The space between the flange and the shoulder forms a circumferential groove **24** suitably dimensioned to snugly grip the paper of the can top end at the upper and lower surfaces thereof around the periphery of the hole **12**. A projection **25** on the under closure fits into and indexes the position of the under closure in the can end **11**. The groove **24** is preferably continuous and uninterrupted by the projection **25**.

Turning now to Figs. 4 and 5, the turn top **16** comprises a disk-like body portion **27** surrounded by an upstanding flange **28** at its periphery. The under surface carries a hollow boss **29** having an external, upwardly facing shallow shoulder **30**. On the upper recessed surface of the disk body **27** is a bar **31** forming a conven-

ient finger piece for turning the turn top within the under closure. A pair of upstanding flanges 32 and 33 are integral with the flange 28 and diverge from one another to form a pour spout for the dispensing opening 34 formed in the disk 27. On the opposite side of the bar 31 are a plurality of shaker holes 36.

As stated heretofore, it is deemed preferable that both the under closure and the turn top be formed of a pliable material. It has been found that a polyethylene compound has suitable characteristics. These characteristics facilitate the manufacture, assembly, and operation of the device. For example, after the under body has been molded, it is readily removable from the single-piece mold, in spite of the upward facing shoulder 23. This can be readily accomplished by the use of a knock-out device in the mold which distorts the closed end 18 within the cylindrical body so as to draw the shoulders 23 outwardly from the mold cavity before the under closure is fully ejected. The other advantages following from the use of this material will appear as the description proceeds.

Assembly of closure

Fig. 6 shows the under closure 16 and the turn top 15 assembled. Because the boss 29 is hollow, it is readily compressed to pass through the hole 20 and then expands with the shallow shoulder 30, locking the turn top within the under closure. The assembled device is pliable, and is readily flexible.

Assembly of closure and can

Figs. 8 and 9 illustrate the simple steps in the assembly of the closure with the filled cans. As the cans come down the line from the filling machine, the operator merely inserts the one edge of the dispensing closure which has the index projection 25 into the notch 13 in the can top. The entire closure is flexed, as shown in Fig. 8, so as to permit the shoulder 23 adjacent the projection 25 to grip the under surface of the can top. This is facilitated by the shape of the notch 13.

When the initial engagement is done in this manner, full engagement of shoulder 23 beneath the edge of the hole is assured. After the indexing operation is completed, pressure is exerted about the periphery of the closure, preferably in a progressive manner, from the indexed edge toward the side of the can top, thus forcing the closure into place. Shoulder 23 snaps through opening 11 into gripping relation with the periphery of the opening in the can to anchor the closure and form a tight seal against leakage. As will be noted, the beveled edge 22 is slightly less in diameter than the opening in the can so as to act as a guide for the closure during the assembly process, and, although the top is usually of paper board, which is very flexible, the nature of the material from which the closure is formed makes the assembly operation practical, especially after the can is filled with salt or like material nearly to the top. The material within the can adds to its rigidity, and the action of the beveled edge 22 prevents the escape of air trapped in the container, thus forming a supporting air cushion under the top end of the can while the closure is forced into place.

It will be readily recognized that this assembly operation can be performed as well by a simple machine as by hand.

Operation

In use, the turn top may be turned to the pour, shake, or closed position by seizing the bar 31 with the fingers, which makes the device readily adapted to convenient use in dispensing the contents. Because of the nature of the material from which the closure is formed, there will be no danger of the turn top sticking within the under closure, due to fine particles of salt or the like of dispensed material finding their way between the interengaging surfaces of the two closure pieces. This is a definite advantage, since it is not unusual for the prior devices to become stuck. When this happens, the added force to free the turn top merely causes the entire closure to rotate within the can upper end, and the device becomes useless.

A structure has been described which will fulfill all the objects of the present invention, but it will be readily recognized that modifications thereof will occur to those skilled in the art which come within the terms of the appended claims.

I claim:

1. A dispensing type closure for assembly with a suitably apertured paper can top, which aperture is notched to form an index comprising a disk-like closure member formed of pliable, ductile material, having a short cylindrical body closed at its lower end, a flange surrounding its upper open cylindrical end, a projection in the outer cylindrical wall of said closure body, an abrupt shoulder with a beveled lower edge on said cylindrical body spaced from said flange and forming a groove around the body and the projection suitably dimensioned to receive the thickness of the paper in the can top, said projection and notch forming the starting point for full engagement of said groove of the closure with said aperture, said disk-like closure being bendable for full engagement of the portion of said groove on said projection and subsequently flattened to attain the said full engagement of said groove with said aperture.

2. A flexible disk-like dispensing closure adapted to be bent transversely for insertion in a notched aperture in a paper top of a paper can after the can is filled nearly to the top with a particulate material so as to reduce the air space within the can, said closure comprising a short cylindrical, disk-like, under closure of pliable material, means forming a shallow recess opening in the upper side of said under closure, means forming a centrally located aperture in said under closure, a turn top of pliable material, registering dispensing openings formed in cooperating seating surfaces on said disk-like under closure and on said turn top, an integrally formed compressible hollow boss with an externally flanged end projecting from said turn top for rotatably securing said turn top in said recess of said under closure with said projection in said aperture so as to hold said seating surfaces together, said pliable material in said seating surfaces and said boss providing the necessary local deformation to accommodate any particulate material trapped between the parts which would normally prevent relative turning therebetween, a flange surrounding the upper open outer wall of said cylindrical under closure, a projection in the outer cylindrical wall of said under closure, an abrupt shoulder with a beveled lower edge on said outer surface of said cylindrical under closure spaced from said flange and forming a groove around the body and around the projection suitably dimensioned to receive the thickness of the paper in the paper can top, said projection and notch forming the starting point for full engagement of said groove with the edge of said aperture, and said disk-like closure being bendable transversely for full engagement of the portion of said groove on said projection and subsequently flatten so that said lower beveled edge engages in the aperture sealing the same against the escape of air from the container, whereby the paper in the can top is supported during full engagement of the groove with the aperture in the can top by the internal air pressure trapped under the top and created by full insertion of said closure.

3. A flexible disk-like dispensing closure for sealing an opening in a can top after the can is filled comprising an under closure of pliable material, means forming a shallow recess opening in the upper side of said closure with a dispensing opening and a seating surface therein adapted to receive a turn-top with a dispensing opening and a seating surface for mating with the seating sur-

face on said under closure, means on said under closure adapted to interengage with a portion on the turn-top to rotatably secure the turn-top in said recess with the seating surfaces together whereby the opening in the turn-top may be moved into, and out of, registry with the opening in said closure, said seating surface of pliable material providing the necessary local deformation to accommodate particulate material trapped on the seating surfaces, a flange surrounding the outer upper edge of said under closure, an abrupt shoulder formed on said under closure opposite said flange having a continuous lower beveled edge for engaging the opening in the can and sealing the same against the escape of air from the

can, whereby the can top is supported during assembly of the dispensing closure with the opening in the can top by internal air pressure under the top created by insertion of the closure.

References Cited in the file of this patent

UNITED STATES PATENTS

1,915,249	Jorgensen	June 20, 1933
2,316,516	Hammerstein	Apr. 13, 1943
2,777,616	De Shazor	Jan. 15, 1957
2,805,005	Kappler	Sept. 3, 1957
2,817,451	Giles et al.	Dec. 24, 1957
2,826,343	Albiani	Mar. 11, 1958