Feb. 13, 1962 T. F. DONOFRIO 3,021,001

PACKAGE FOR AN INDIVIDUAL PORTION

Filed Sept. 1, 1960

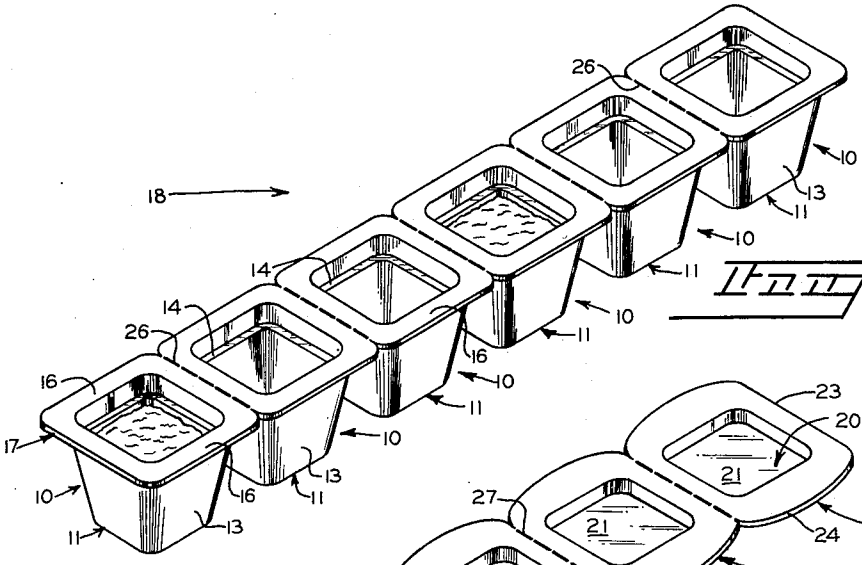

FIG. 1.

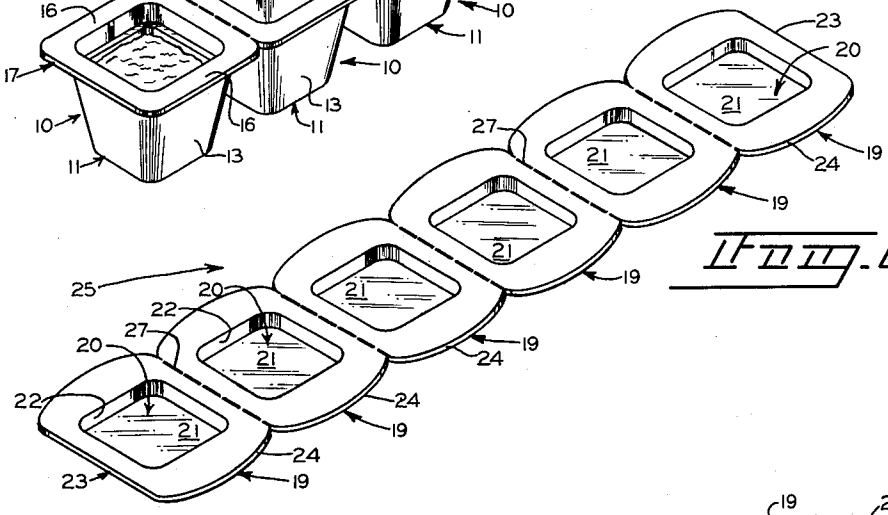

FIG. 2.

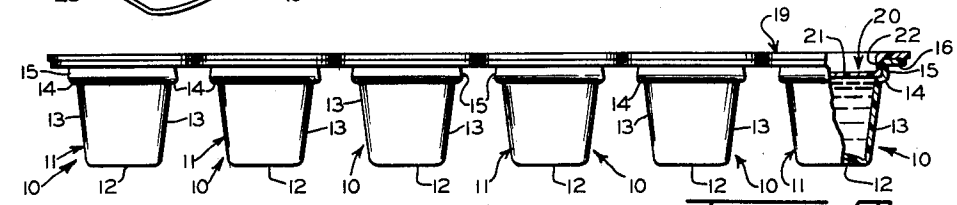

FIG. 3.

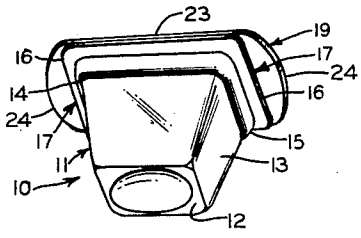

FIG. 4.

INVENTOR.
THOMAS F. DONOFRIO
BY Owen & Owen
ATTORNEYS

United States Patent Office 3,021,001 Patented Feb. 13, 1962

3,021,001

PACKAGE FOR AN INDIVIDUAL PORTION

Thomas F. Donofrio, Toledo, Ohio, assignor, by mesne assignments, to Silver Creek Precision Corporation, New York, N.Y., a corporation of New York

Filed Sept. 1, 1960, Ser. No. 53,558
2 Claims. (Cl. 206—56)

This invention relates to small packages, and more particularly to packages for individual portions or small quantities of various materials, and will be illustrated in the specification as being a package for an individual portion of a foodstuff or similar material such as liquid or paste.

A number of suggestions and disclosures have been made where packages of small size have been molded or otherwise formed from sheet material and automatically filled at high speed with small quantities of a substance, such as food, and then sealed (usually by the application of heat to fuse the package and the cover material together), the whole subject matter being concerned with high speed production, high speed filling, automatic sealing, etc. Little thought has been given to the desirability of packages of this general type being made available for small quantity users, particularly those users who do not wish to invest in high speed automatic machinery and yet wish to be able to obtain the advantages of packages of this type.

It is, therefore, the principal object of this invention to provide a small, formed, cup-like package originally manufactured in package units, say, of four, six, eight or ten in number, with the packages arranged, for example, in a single or double row and removably attached to each other at their adjacent sides, similar cover units also being provided, and the package being adapted for manual closing without the necessity of heat or other sealing equipment, the package being easily openable and yet sufficiently tightly sealed to permit safe handling.

It is yet another object of the instant invention to provide an individual portion package for foodstuffs, or the like, each of the packages comprising a cup-shaped body having a generally flat bottom and an area at its bottom less than the area at its top, with upwardly diverging walls, outwardly extending shoulders and a top flange, the return or marginal walls of the shoulders being inwardly inclined so as to provide an "undercut" recess and the package cover having a central depression with complementary vertical portions to mate with the "undercut" recess of the package and to permit the cover to be snapped into place, retained by the mating "undercut" portions of the cover and package, and yet readily removed by slight deformation of the cover.

These and other more specific objects and advantages of a package embodying the invention will be better understood from the following specification and from the drawings, in which—

FIG. 1 is a view in perspective of a package unit comprising a single row of six adjacent individual packages and showing two of the packages filled with a liquid material;

FIG. 2 is a view in perspective of a cover unit designed for covering the packages in the package unit illustrated in FIG. 1;

FIG. 3 is a front view in elevation of the package unit of FIG. 1 covered by the cover unit of FIG. 2, with a part of one of the packages broken away to illustrate the cooperation between the package and the cover whereby the cover is removably retained in place on the package without the necessity for the use of an adhesive or any adhesion between the materials of which the package and cover are made, and

FIG. 4 is a view in bottom perspective of a single

closed package showing its cover in place and the relationships of various parts and portions of both the package and the cover.

In FIG. 1 there is illustrated a plurality of individual packages **10** each of which has a molded cup-shaped body **11**. In this embodiment of the invention, the bodies **11** are illustrated as being approximately square in horizontal plan and as having substantially flat bottoms **12** (FIG. 4), with central convex portions for strengthening purposes. Each of the packages **10** is shown as having four upwardly extending, divergent side walls **13**, the side walls **13** and bottom **12**, of course, being continuous, for example, formed from a single sheet of a thin material such as sheet plastic, waxed paper, or other material.

At the upper end of each side wall **13** there is formed an outwardly extending shoulder **14** and the shoulders **14** on all four of the side walls **13** cooperate to form an outwardly extending, generally horizontal shelf which extends around the body. Each of the shoulders **14** has an upwardly and inwardly extending shelf margin **15**. The shelf margins **15** are inwardly directed at an angle of, say, three to five degrees to the vertical and the joining angle between the shoulders **14** and margins **15** is slightly rounded to avoid the creation of sharp stress concentration points. At the upper edges of the shelf margins **15** the material from which the package **10** is formed is turned over horizontally forming outwardly directed lips **16** which cooperate to form a continuous planar flange **17** extending around the perimeter of the upper edges of the shelf margins **15**. The flange **17** also forms a main lip on the package body **10**.

FIGURE 1 shows a group of six packages **10** assembled into a unit generally indicated by the reference number **18**, which unit is one row wide with adjacent packages connected to each other along the edges of their flanges **17**, thereby forming a unit which can be fabricated, handled, filled, capped, shipped, etc., as one piece. While the package unit **18** is shown as having six packages in a single row, it will be appreciated, of course, that the number of packages in a row is limited only by the facility required to handle each unit during its fabrication, filling, closing and shipping and, as will be discussed more fully below, packages embodying the invention may also be fabricated in units consisting of two adjacent rows of individual packages.

In FIGURE 2 a group of package covers **19** is shown. Each of the package covers **19** has a central recess **20** having a generally flat horizontal bottom **21** and generally vertical side walls **22** around the margins of the bottom **21**. The side walls **22** terminate at their upper edges in a continuous planar flange **23** which extends around the perimeter of the recess **20**.

The outside horizontal dimensions of the side walls **22** of the recess **20** are such and the side walls **22** are so flared downwardly and outwardly that the cover **19** is snugly insertable in the angular space bordered by the shelf margins **15** of the package **10**, the flare on the walls **22** of the cover **19** also being in the order of three to five degrees from the vertical so that the outside horizontal dimension of the bottom **21** of the cover recess **20** is larger than the horizontal dimension between the upper edges of the shelf margins **15** of the package **10**.

The flange **23** on each of the covers **19** is illustrated as extending horizontally a distance greater than the flange **17** on each of the packages **10**, in two directions, providing a pair of oppositely directed tabs **24** by which the cover **19** may be grasped in order that it can be removed from a package **10**. While two tabs **24** are illustrated in the drawings, it will be appreciated, of course, that each of the covers **19** could be formed with only one tab **24** at one side and that the opposite side of the flange **23** could be of the same width as the corresponding side

of the cover flange **17**. Such an arrangement could provide for a package and cover unit two packages wide with the removal tabs **24** of each row of covers **19** extending in opposite directions.

FIGURE 2 shows a unit **25** of individual covers **19** designed to close the unit **18** of packages **10** shown in FIG. 1. The assembly of covers **19** on packages **10**, while in their respective units, is shown in FIG. 3, and an individual sealed package is illustrated in FIG. 4. Both the package unit **18** and the cover unit **25** are designed so that individual packages **10** with their covers **19** can readily be removed from the unit after assembly is shown in FIG. 3. To this end, the joining flanges **17** of adjacent packages **10** are weakened, for example, by perforations along interpackage lines **26** and the flanges **23** of adjacent covers **19** are similarly weakened as by perforations along intercover lines **27**. After assembly of a cover unit **25** on a packaging unit **18** with the covers **19** all snapped in place on their respective packages **10** the unit of filled packages may be handled in that manner. An ultimate user, for example, a waitress in a restaurant or a stewardess on an airplane, may separate the packages from each other by simultaneously tearing along the parting lines **26** and **27** for the removal of each package from a complete unit.

I claim:

1. A package comprising a molded cup-shape body having a generally flat bottom and upwardly extending, divergent side walls, outwardly extending shoulders at the upper ends of said walls forming an outwardly extending generally horizontal shelf around said body, upwardly and inwardly extending shelf margins on the outer side of said shelf, turned out lips at the upper ends of said margins, said lips forming a continuous planar flange extending horizontally around the perimeter of the upper edges of said margins and said body; a removable cover having a central recess with a generally flat bottom and

generally vertical side walls and a continuous, planar flange extending horizontally around the perimeter of the recess at the upper edge of the recess, the outside horizontal dimensions of said recess side walls being snugly insertable in the space between the shelf margins of said package body and the generally vertical walls of said recess being downwardly flared complementarily to the upward and inward extent of the shelf margins of said package body, the flange on said cover extending horizontally beyond the flange on said package body on at least one side when said cover is inserted in said package.

2. A multiple package unit consisting of a plurality of package bodies according to claim 1 integrally molded from a single piece of resinous sheet material with the packages extending in a row one package wide and a plurality long, the planar flanges of adjacent packages being continuous and weakened along interpackage lines extending across the row and a multiple cover unit consisting of a plurality of covers according to claim 1 integrally molded from a single piece of resinous sheet material with the individual covers extending in a row one cover wide and a similar plurality long, the planar flanges of adjacent covers being weakened along intercover lines extending across the row and the flanges thereof extending horizontally beyond the flanges of said package bodies in a direction transverse to the extent of the row.

References Cited in the file of this patent

UNITED STATES PATENTS

1,168,731	McKee	Jan. 18, 1916
2,568,697	Amberg	Sept. 25, 1951
2,582,655	Schenk	Jan. 15, 1952
2,724,539	Schenk	Nov. 22, 1955
2,947,463	Conklin	Aug. 2, 1960

FOREIGN PATENTS

280,201	Switzerland	Apr. 16, 1952