(No Model.) 2 Sheets—Sheet 1.

G. M. BEARD.

BALL BEARING.

No. 590,203. Patented Sept. 21, 1897.

Fig. 1.

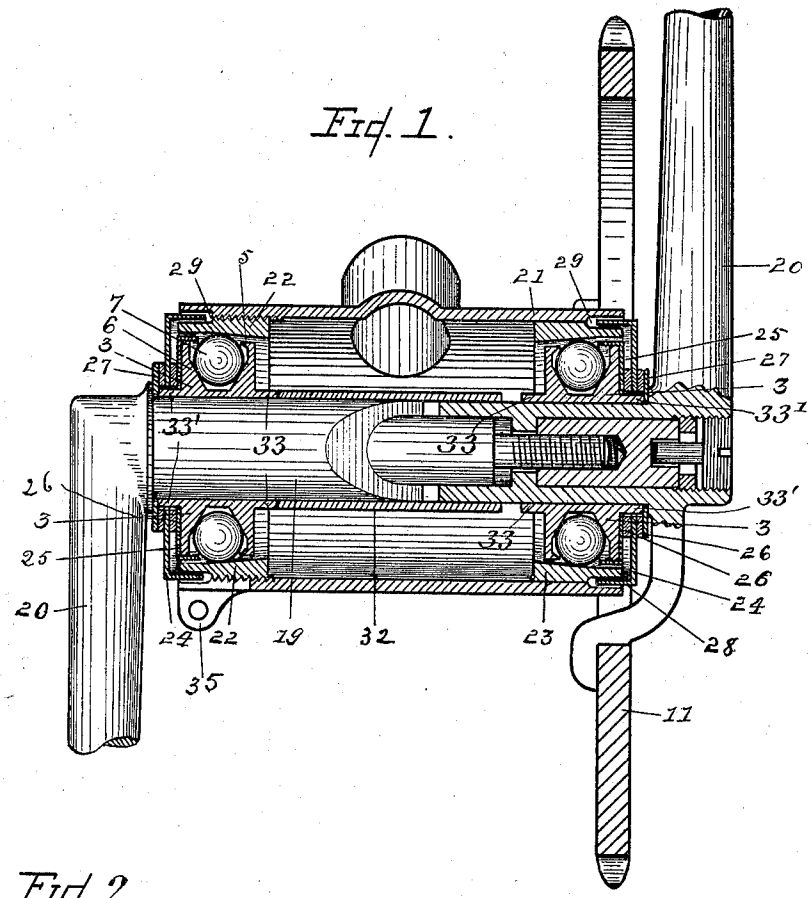

Fig. 2.

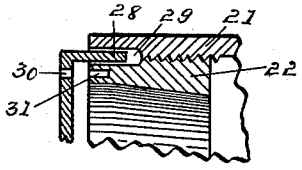

WITNESSES:

N. Webster Schlater

Minnie E. Schlater

George M. Beard INVENTOR

BY Chapin & Denny

his ATTORNEYS.

THE NORRIS PETERS CO., PHOTO-LITHO., WASHINGTON, D. C.

(No Model.)

2 Sheets—Sheet 2.

G. M. BEARD.

BALL BEARING.

No. 590,203. Patented Sept. 21, 1897.

Fig. 3.

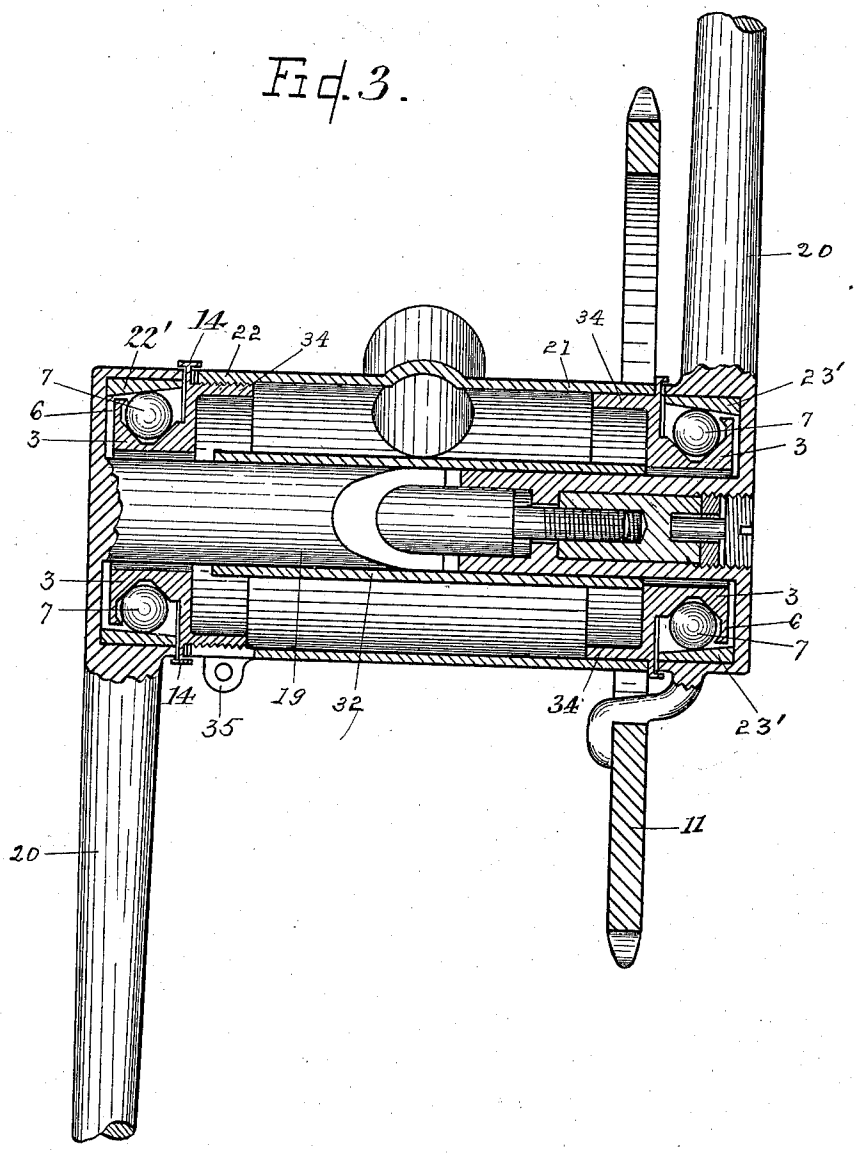

WITNESSES:

N. Webster Schlater

Minnie E. Schlater.

George M. Beard INVENTOR

BY Chapin & Denny

his ATTORNEYS.

THE NORRIS PETERS CO., PHOTO-LITHO., WASHINGTON, D. C.

UNITED STATES PATENT OFFICE.

GEORGE M. BEARD, OF ANGOLA, INDIANA.

BALL-BEARING.

SPECIFICATION forming part of Letters Patent No. 590,203, dated September 21, 1897.

Application filed March 29, 1897. Serial No. 629,751. (No model.)

To all whom it may concern:

Be it known that I, GEORGE M. BEARD, a citizen of the United States, residing at Angola, in the county of Steuben, in the State of Indiana, have invented certain new and useful Improvements in Ball-Bearings for Bicycle-Wheels and like Vehicles; and I do hereby declare that the following is a full, clear, and exact description of the invention, which will enable others skilled in the art to which it appertains to make and use the same, reference being had to the accompanying drawings, which form part of this specification.

My invention relates to ball-bearings now in general use in bicycles and like vehicles; and it consists in certain novel features of construction and the combination and arrangement of the parts, as hereinafter described.

The object of my invention is to provide a cage or spool for the supporting-balls so constructed and arranged that the bearing on the balls is distributed at different points, and thus present a greater wearing-surface without sensibly increasing the friction.

Another object is to more effectually exclude dust and dirt from the bearing parts by means of a protecting cap or washer.

I attain these objects by the mechanism illustrated in the accompanying drawings, in which—

Figure 1 is a front view of a two-part bicycle crank-shaft, partly in section, to show the connecting parts and construction. Fig. 2 is a sectional detail of a part of the hanger, the cone, the ball-cage, and dust-cap; and Fig. 3 is a view of a modified form, partly in section, and adapted to a two-part bicycle crank-shaft of a different construction from that shown in Fig. 1.

Similar reference-numerals refer to similar parts in the several views, in which—

19 is the two-part crank-shaft, broken away in part to show its connection. 20 and 20 are the crank-pedals. 21 is the hanger, having mounted upon it the sprocket-wheel 11, and 32 is an annular sleeve loosely mounted upon the crank 19.

At the ends of the hanger 21 are inserted annular cone-collars 22 and 23, Fig. 1, having the inner face converging, as shown. The cone 22 is externally screw-threaded and adapted to engage with the internally-screw-threaded end of the hanger 21, while the cone 23 is adapted to be inserted in the other end of the hanger without being screw-threaded.

Between the outer end of the hanger and the cones 22 and 23 are recesses 29, for the purpose hereinafter stated.

An annular ball-cage 3 is mounted upon each end of the shaft 19, between the crank-arms 20 and 20, having outward-projecting flanges 5 and 6, thereby forming a raceway on the periphery of the cage adapted for a series of antifriction-balls 7. The inner sides of both flanges converge at the bottom of the raceway, so as to present but a single point of contact on each flange for the balls 7 to rest upon and to prevent any contact of the balls with the bottom of the raceway.

The ball-cage cylinder is prolonged upon the crank-shaft beyond the outer sides of the flanges 5 and 6, so that the inner prolongation 33 abuts against the ends of the sleeve 32 when the two parts of the crank-shaft are drawn together and secured in that position. The inner flange 5 at its outer edge projects partly over the balls in the raceway, as shown in Fig. 1. On the projection 33′ on the outer end of the cage is mounted an annular cap 25, having a flange upon its periphery which projects over the flange 6 and partly over the balls in the cage. By this construction when the balls are inserted in the cage and the cap 25 is mounted upon the flange 6 the balls are secured in the cage, so as to prevent their falling out, but enough of their surfaces are presented to afford a bearing for the cones when the cages are inserted therein. The cap 25 fits closely upon the periphery of the flange 6, and the inclined inner side of the cone contacts with the balls 7 at a single point. By this construction the balls have only three contact-points, two in the cage and one with the cone, and thus all slipping and sliding of the balls in the race are avoided.

Against the cap 25 upon the cone projection

is closely fitted a felt or rubber washer 26, and against this washer an annular cap 24, having an inner lateral flange 28 upon its periphery which enters the recess 29 between the outer edge of the cone and the inner edge of the hanger, as already described. Against the outer side of the cap 25 is fitted another felt or rubber washer 27 to more effectually exclude dirt and dust. The cone 23 differs from the cone 22 in not being externally screw-threaded to engage with the hanger-sleeve. The cage 3 and the cone 23 upon the sprocket end of the hub, when the two parts of the crank shaft or axle are forced together, slide upon the shaft until the inner end of the cage abuts against the sleeve 32, and by the same movement the bearings upon the balls 7 are adjusted. The two parts of the crank-shaft being fastened together by suitable means, as a screw-threaded bolt extending through the center, the whole is rigidly secured together.

A detailed enlarged view of the end of the cone 22, the hanger end, the cap 24, and the recess 29 is shown in Fig. 3, in which coincident diametrically opposite perforations 30 and 31 are made through the cap and the cone for inserting a tool to adjust the bearings.

Fig. 3 shows my improvement adapted for a two-part bicycle crank-shaft in which the cages are placed in lateral recesses of the crank-arms. To adapt it to this kind of a bicycle, the crank-shaft requires a slight modification, but not to such an extent as to depart from the essential features and scope of my invention. In this construction the ball-cage is provided with a lateral peripheral flange 34 of sufficient diameter to snugly fit the open ends of the crank-hanger. The cones 22′ and 23′ are fitted over the outer flange of the cages, and the recessed crank-arms are adjusted upon the cones, and the two parts of the bicycle crank-shaft are secured together by a screw-threaded bolt, the same as in Fig. 1; but the outer flange 6 of the ball-cages is lesser in diameter than the inner flange 5, and the under side of the cone flares outwardly to its inner edge. In this construction the caps 24 and 25 and the adjacent washers are omitted, as the recesses into which the cages and collars or cones are inserted protect them from the dust. A suitable washer 14 may be placed over the point of union of the crank-shaft with the end of the hanger.

It is obvious that my invention is adapted for other vehicles as well as bicycles.

Having thus briefly described my invention, what I claim as new, and desire to secure by Letters Patent, is—

1. A ball-bearing for bicycles and other like vehicles, comprising a ball-cage revolubly mounted upon each end of the crank shaft or axle, and having a peripheral raceway with opposite diverging sides adapted for a two-point bearing contact of antifriction-balls therein; a series of antifriction-balls mounted in said raceway having contact therewith at a single point only on each of said sides; a surmounted annular cone having an inner inclined side bearing upon said balls at a single point, and thereby coöperating with the raceway in forming a three-point bearing contact with said balls; a sleeve loosely mounted upon said axle midway between the said cages; and means for retaining said cages and cones upon said axle; all arranged substantially as described and shown.

2. A ball-bearing for bicycles and other like vehicles, comprising a ball-cage revolubly mounted upon each end of the crank shaft or axle, the annular raceways, of the cages provided with oppositely inclined or oblique sides adapted to form a two-point ball-bearing as described; a series of antifriction-balls mounted in said raceway; a sleeve slidably mounted upon the said shaft between said cages; an annular cone-cap having an inclined inner side and within each end of the hanger, and coöperating with the said ball-cage to form a three-point ball-bearing contact with the balls in said raceways; means for adjusting the bearings of said cones upon the balls in said raceways; the crank-shaft, and the hanger; all arranged as described and shown.

3. A ball-bearing for a two-part bicycle crank-shaft comprising a ball-cage revolubly mounted upon each end of the shaft within suitable recesses in the pedal crank-arms, and having an annular raceway with outwardly-divergent sides to form a two-point bearing for antifriction-balls in said raceway, and also having an inwardly-lateral projection upon the inner projecting side of said cage adapted to slidably engage with the inner side of the hanger; the hanger; a cone cap or collar slidably mounted within the said hanger upon the outer side of the cage and within the recess aforesaid, and adapted for a single-point bearing upon the balls in said cages; a series of antifriction-balls within the raceways; a sleeve slidably mounted upon the shaft between said cages; and means for adjusting the bearing of the cones upon the balls, in combination with the two-part crank-shaft; all arranged as described and shown.

4. A ball-bearing for a two-part bicycle crank-shaft, comprising a ball-cage revolubly mounted upon each end of the crank-shaft within suitable recesses in the pedal crank-arms, and whose annular raceway is provided with oppositely inclined or oblique sides adapted to form a two-point ball-bearing as described, and also having an inwardly-lateral projection upon the inner projecting side of said cage adapted to engage with the inner side of the outer end of the hanger; the hanger; a cone cap or collar slidably mounted within the said hanger upon

the outer side of the cage and within the recess aforesaid, and adapted for a single-point bearing upon the balls within the cage; means for securing the ball-cages in position against lateral thrust upon the shaft between the said cages; a series of antifriction-balls within the raceways, as shown; and means for adjusting the bearing of the cones upon the balls, all arranged as described and shown.

Dated and signed by me, at Angola, Indiana, this 25th day of January, A. D. 1897.

GEORGE M. BEARD.

Witnesses:

WM. H. WALLER,

CLELA POWERS.