(12) STANDARD PATENT (11) Application No. **AU 2010257353 B2**
(19) AUSTRALIAN PATENT OFFICE

(54) Title
Building foundation structure, foundation construction method, and anchor bolt installation jig

(51) International Patent Classification(s)
E02D 27/02 (2006.01) ***E02D 27/32*** (2006.01)
E02D 27/00 (2006.01)

(21) Application No: **2010257353** (22) Date of Filing: **2010.12.21**

(43) Publication Date: **2012.07.05**
(43) Publication Journal Date: **2012.07.05**
(44) Accepted Journal Date: **2014.12.11**

(71) Applicant(s)
Sekisui House, Ltd

(72) Inventor(s)
Hatae, Tomoya;Ogawa, Masayuki;Ichikawa, Kazuki

(74) Agent / Attorney
Griffith Hack, GPO Box 4164, Sydney, NSW, 2001

(56) Related Art
JP 2005-068858 A
JP 2005-171525 A
US 5540524 A
US 5060436 A
US 6550213 B1

2010257353 21 Dec 2010

DOCUMENT NAME: Abstract

A plurality of columns (2) making up a framework of a building are installed in upright fashion above raft foundation (1) comprising more or less lattice-like arrangement of footing beams (11) and planar foundation slab (12). Foundation slab (12) is formed such that heights at the top thereof where a plurality of principal columns (2) are installed in upright fashion thereover are at the same uniform level. At locations where such columns (2) are installed in upright fashion, at least two adhesively anchored anchor bolts (4A) are embedded per location. Following curing of concrete at foundation (1), anchor bolt embedding holes (18) are formed in the top thereof, and adhesively anchored anchor bolts (4A) are embedded therein. Column (2) is secured to foundation (1) by way of those anchor bolts (4A) and column foot fixture (3), which is linked to the bottom of column (2).

SELECTED DRAWING: FIG. 1

2010257353 21 Dec 2010

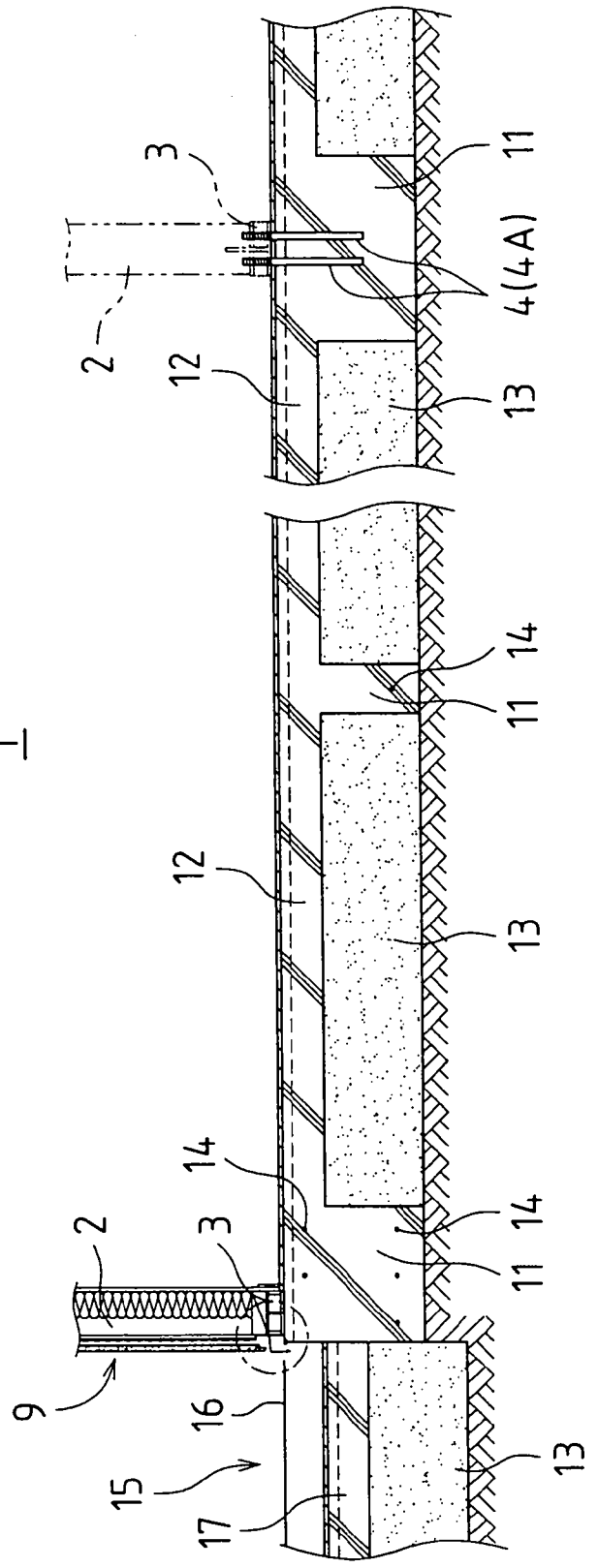

FIG.1

2010257353 21 Dec 2010

AUSTRALIA

Patents Act 1990

COMPLETE SPECIFICATION

Standard Patent

Applicant:

SEKISUI HOUSE, LTD

Invention Title:

BUILDING FOUNDATION STRUCTURE, FOUNDATION CONSTRUCTION METHOD, AND ANCHOR BOLT INSTALLATION JIG

The following statement is a full description of this invention, including the best method for performing it known to me/us:

2010257353 20 Nov 2014

DOCUMENT NAME: Specification

TITLE OF INVENTION: Building Foundation Structure, Foundation Construction Method, and Anchor Bolt Installation Jig

TECHNICAL FIELD

The present invention relates to a foundation structure for a building, and to a construction method therefor. More specifically, the present invention relates to a structure for a raft foundation made of reinforced concrete, to a construction method therefor, and to an anchor bolt installation jig that may be favorably employed when carrying out the aforesaid construction method.

BACKGROUND ART

Two-by-four construction has become very common in various Australian locales as a construction technique for residential buildings and other such wooden buildings of small or moderate size. Two-by-four construction is a construction technique in which floor frames and wall frames in the form of modular panels are assembled to construct a box-like structure in sequence starting from the lower portion thereof.

Such structure is ordinarily assembled above a raft foundation made of reinforced concrete. A raft foundation is a type of foundation in which the load from the building is transmitted to the ground by means of a single foundation slab and a lattice-like arrangement of footing beams. Frequently employed as a method for constructing such a raft foundation is a method in which a plurality of blocks made of foamed resin are arranged so as to straddle locations where footing beams are to be created at the interior of a recessed site formed by excavation of the ground, footing beam reinforcing bars are arranged within the spaces between those blocks, and foundation slab reinforcing bars are arranged in the region above the blocks, following which concrete is poured within the entire recessed site. This construction method has the advantage that it permits dramatic reduction in the amount labor required for formwork operations, due to the fact that, instead of form panels, blocks made of foamed resin are utilized as embedded filler material.

The present state of affairs is that frame members making up floor frames and wall frames are secured by means of nails to the top surface of the raft foundation formed in this manner.

SUMMARY OF INVENTION

Within a wall formed by two-by-four construction, a multiplicity of shallow spaces are formed as a result of partitioning by the boards, frame members, and so forth that make up the wall frame. When moisture is trapped in such intra-wall spaces and such moisture condenses due to the indoor versus outdoor temperature difference or the like, this can increases the tendency for hardware and wood members making up the wall frame to deteriorate, decreasing building life. For such reasons, two-by-four construction can be said to be a building construction technique that is suited to dry climates.

The present applicant has therefore encouraged and seeks to popularize wood frame construction as a building technique suitable for hot and humid climates, or cold climates where indoor heating is frequently employed in winter, and the like. Being a construction technique in which column(s), beam(s), purlin(s), and/or other such frame members are joined to constitute a building framework, the framework produced by wood frame construction can have a lower degree of sealing than that produced by two-by-four construction, and this may facilitate adoption of strategies for reduction of condensation. However, where wood frame construction is employed, it may be necessary to firmly connect the principal column(s) (the column(s) that bear the load of the building) making up the building framework to the foundation. The strength obtained with conventional nailing or the like can be inadequate for use as such connection means. To firmly connect a column to a foundation, it would be desirable for anchor bolt(s) to be embedded in the foundation, for a column foot fixture made of steel to be attached to the bottom of the column, and for this column foot fixture to be fastened by means of nut(s) to the anchor bolt(s).

However, in the aforementioned raft foundation construction method, it can be difficult to accurately install anchor bolts within and/or above spaces between blocks made of foamed resin which are arrayed on the ground. An embodiment of therefore may provide a foundation structure suitable for accurately positioning and retaining so as to prevent movement of anchor bolt(s) even in the context of a raft foundation such as the

aforementioned, and to a construction method therefor. An embodiment can also provide an anchor bolt installation jig that may be favorably employed when carrying out the aforesaid construction method.

In the context of a foundation structure for a building provided with a plurality of footing beams arranged in more or less lattice-like fashion as viewed from above and a planar foundation slab formed at an upper part of at least a portion of the footing beams in such fashion as to permit a plurality of columns making up a framework of the building to be installed in upright fashion above the foundation slab, an embodiment is characterized in that the foundation slab is formed such that heights at the top thereof where the plurality of columns are installed in upright fashion thereover are at the same uniform level; at at least one location on the foundation slab where at least one of the plurality of columns is installed in upright fashion thereover, at least two adhesively anchored anchor bolts are embedded per said column installation location such that upper portions thereof protrude above the top of the foundation slab; at least one column foot fixture that is made of steel is linked to the at least two adhesively anchored anchor bolts; and a bottom of at least one of the columns is linked to the at least one column foot fixture.

In accordance with such foundation structure, foundation(s) and column foot fixture(s) are firmly connected by way of adhesively anchored anchor bolt(s) embedded in top(s) of foundation slab(s). What is referred to as an adhesively anchored anchor bolt is a post-installation-type anchor bolt that is embedded within an anchor bolt embedding hole formed in the surface of cured concrete, the anchor bolt being affixed therewithin by means of the chemical reaction of an adhesive. Following curing of the poured concrete, the chalk line marking operation whereby the location at which an adhesively anchored anchor bolt is to be embedded is determined can be easily carried out thereover. Accordingly, even in the context of a raft foundation having structure such that blocks made of foamed resin and serving as embedded filler material are arrayed on the ground, employment of adhesively anchored anchor bolts will facilitate accurate positioning and retention so as to prevent movement of anchor bolts.

In a first aspect of the invention there is provided a foundation structure for a building provided with a plurality of footing beams, the foundation structure comprising at least one

termite control barrier that is made of sheet metal covering a top corner region of at least one of the footing beams that runs parallel to a perimeter of a building constructed on the foundation structure; the at least one termite control barrier being provided with a horizontal section that projects outward beyond at least one of the footing beams, and a pendent section that extends in a downwardly directed fashion from an outside edge of the horizontal section; wherein an interior of a groove recess bounded by the pendent section and the horizontal section, and an outside surface of at least one of the footing beams, is filled with a termite repellant.

In an embodiment a foundation is provided with a plurality of footing beams arranged in more or less lattice-like fashion as viewed from above and a planar foundation slab formed at an upper part of at least a portion of the footing beams in such fashion as to permit a plurality of columns making up a framework of a building to be installed in upright fashion above the foundation slab, the foundation construction method being characterized in that it comprises [1] a step in which appropriate perimeter sheathing is erected at a perimeter portion of a site at which construction of the foundation is to be carried out so as to surround said construction site therewith; [2] a step in which concrete is poured within the foundation construction site, the footing beams and the foundation slab are formed in monolithic fashion, and heights at the top of the foundation slab where at least two of the plurality of columns will be installed in upright fashion thereover are made to be the same uniform level; [3] a step in which, following curing of the concrete, at at least one location on the foundation slab where at least one of the plurality of columns will be installed in upright fashion thereover, at least two anchor bolt embedding holes are formed per said column installation location; [4] a step in which adhesively anchored anchor bolts are respectively embedded in the anchor bolt embedding holes, upper portions of said anchor bolts are made to protrude above the top of the foundation slab, and said anchor bolts are respectively adhesively affixed to the anchor bolt embedding holes; [5] a step in which at least one column foot fixture is linked to the anchor bolts; and [6] a step in which a bottom of at least one of the columns is linked to the at least one column foot fixture.

Employment of such construction procedure may make it possible to efficiently form the foundation associated with the foregoing constitution.

Note that embedded-type anchor bolt(s) and/or similar appropriate embedded component(s) which is/are installed prior to pouring of concrete may be employed in combination with post-installation-type adhesively anchored anchor bolt(s). When these are used in combination therewith, it is preferred that a construction method be adopted which is such that [1b] a step in which at least one gauge member for embedded component positioning is made to span a region above the foundation construction site by way of the perimeter sheathing or appropriate supports that are for supporting the perimeter sheathing and that are installed to the outside of said perimeter sheathing; and [1c] a step in which at least one embedded-type anchor bolt or similar appropriate embedded component is suspended at at least one prescribed location within the foundation construction site by way of the at least one gauge member be carried out in parallel fashion with respect to the step [1] in which the perimeter sheathing is erected at the perimeter portion of the foundation construction site so as to surround said construction site therewith; following which the step [2] in which the concrete is poured within the foundation construction site is carried out; and following curing of the concrete, the at least one gauge member is removed therefrom.

As a result of adoption of a constitution in which gauge member(s) such as the aforementioned is/are made to span region(s) above foundation construction site(s), this may facilitate improvement in the accuracy with which embedded-type anchor bolt(s), embedded component(s), and/or the like is/are positioned, even in the context of a raft foundation having structure such that blocks made of foamed resin are arrayed thereat.

In an embodiment, an anchor bolt installation jig is used during formation of anchor bolt embedding holes at the top of cured concrete, the anchor bolt installation jig being characterized in that it comprises a flat main plate that is rectangular in shape as viewed from above; cruciform guide grooves that have more or less V-shaped cross-sections and that are formed at the two faces of the main plate so as to respectively bisect the length and the width dimension of said main plate; four anchor bolt guide holes arranged at the corners of a first imaginary square centered on the intersection of the cruciform guide grooves and respectively formed so as to pass through the main plate at each quadrant into which the main plate is partitioned by the cruciform guide grooves; four nail holes arranged at the corners of a second imaginary square centered on the intersection of the cruciform guide grooves and respectively formed so as to pass through the main plate at locations outward from the four

anchor bolt guide holes at the respective quadrants; and a plurality of shims that have mutually identical thicknesses and that are attached to one face of the main plate.

Use of such anchor bolt installation jig may make it easier to ensure the accuracy with which adhesively anchored anchor bolt(s) is/are installed, even in the context of a raft foundation having structure such that blocks made of foamed resin are arrayed thereat.

The foundation construction method and building foundation structure of an embodiment which utilize post-installation-type adhesively anchored anchor bolt(s) at location(s) where column(s) is/are installed in upright fashion can make it possible to accurately position and firmly retain anchor bolt(s) even in the context of a raft foundation at which blocks made of foamed resin are arrayed on the ground.

Furthermore, use of anchor bolt installation jig(s) in accordance with an embodiment can make it possible to improve the accuracy and efficiency of operation(s) whereby adhesively anchored anchor bolt(s) is/are embedded in foundation(s).

BRIEF DESCRIPTION OF DRAWINGS

Embodiments of the invention and other embodiments will not be described with reference to the accompanying non-limited figures, in which:

FIG. 1 Vertical sectional view showing basic constitution of a foundation.

FIG. 2 Perspective view showing structure associated with connection between column and column foot fixture.

FIG. 3 Perspective view of vertical section showing construction configuration prior to pouring of concrete in the context of a foundation construction method.

FIG. 4 Perspective view showing configuration whereby embedded-type anchor bolts and the like are suspended at prescribed locations by way of gauge members in the context of the construction configuration of FIG 3.

FIG. 5 Perspective view of vertical section showing construction configuration following pouring of concrete within a foundation construction site and removal of gauge members in the context of a foundation construction.

FIG. 6 Front-side perspective view of an anchor bolt installation jig.

FIG. 7 Rear-side perspective view of an anchor bolt installation jig.

FIG. 8 Explanatory diagram showing a construction procedure in which the anchor bolt installation jig shown in FIGS. 6 and 7 is used to embed adhesively anchored anchor bolts in concrete.

FIG. 9 Partial enlarged sectional view showing an example of an anti-termite measure capable of being applied to a foundation associated with an embodiment.

EMBODIMENTS FOR CARRYING OUT INVENTION

Below, embodiments of the present invention and other embodiments are described with reference to the drawings.

BASIC STRUCTURE OF FOUNDATION

FIG. 1 shows the basic constitution of a foundation associated with an embodiment.

Foundation 1 shown by way of example is a raft foundation comprising a plurality of footing beams 11 arranged above the ground in more or less lattice-like fashion as viewed from above, and planar foundation slab 12 formed at the upper portion of those footing beams 11. Footing beams 11 are formed by pouring concrete into the region(s) between forms comprising a plurality of blocks 13 made of foamed resin which are arranged above the ground in array-like fashion such that the space(s) therebetween correspond to the width(s) of footing beams 11. Reinforcing bars 14 are arranged as appropriate within footing beams 11 and foundation slab 12.

A building (not shown) might be assembled above this foundation 1 using wood frame construction techniques. The principal columns 2 that bear the load from the building are connected to foundation 1 by virtue of the fact column foot fixtures 3 made of steel and attached to the bottom ends of columns 2 are fastened by means of nuts to anchor bolts 4 embedded in foundation 1.

The structure associated with the connection between column 2 and column foot fixture 3 is shown in FIG. 2. Column foot fixture 3 shown by way of example is provided with base plate 31, spacer 32, securing plate 33, and attachment plate 34. Base plate 31 and securing plate 33 are both plate-like objects that are square in shape as viewed from above and that are formed so as to be roughly identical to the cross-sectional dimensions of column 2 in size. Spacer 32 is a member wherein plate-like objects of uniform width have been made

to stand upright, being joined in more or less cruciform fashion as viewed from above. The bottom edges of spacer 32 are welded to the top face of base plate 31, and the top edges of spacer 32 are welded to the bottom face of securing plate 33, so that these form an integral structure. Bolt through-holes 35 are formed in base plate 31, there being one bolt through-hole 35 for each of the four locations produced by partitioning by spacer 32. Attachment plate 34 is a more or less rectangular plate-like object that has been made to stand upright at the central portion of the top face of securing plate 33, the bottom edge of attachment plate 34 being welded to the top face of securing plate 33. A plurality of dowel holes 36 are formed at attachment plate 34.

Anchor bolts 4 have been embedded in foundation 1. Column foot fixture 3 is placed on the top face of foundation 1, and the upper portions of anchor bolts 4, which protrude from the top face of foundation 1, are inserted through bolt through-holes 35 formed in base plate 31. In addition, nuts 41 are tightened onto the upper portions of anchor bolts 4 to secure column foot fixture 3 to the top face of foundation 1.

At such time, note that anchor bolts 4 need not be inserted through all four of the bolt through-holes 35 formed at base plate 31, it being possible, as in the exemplary embodiment, for connection with anchor bolts 4 to be accomplished through use of only two bolt through-holes 35 located along a diagonal. Furthermore, to facilitate fastening of nuts 41 thereonto, it is possible as in the exemplary embodiment to form access hole(s) 37 in securing plate 33.

Formed at the bottom end of column 2, which comprises a wooden member having square cross-section, is slit 21, which has extension in the axial direction and which lies in the plane of the centerline thereof. Moreover, a plurality of dowel holes 22 perpendicular to this slit 21 are formed so as to pass through two mutually opposite side faces of column 2. This column 2 is made to stand upright on column foot fixture 3, and attachment plate 34 of column foot fixture 3 is inserted into slit 21 of column 2. With these in this state, respective dowel holes 22 of column 2 are aligned with respective dowel holes 36 formed in attachment plate 34, and dowel pins 23 are hammered into respective dowel holes 22, 36 from the side of column 2 to connect column 2 and column foot fixture 3.

Important in the foundation structure associated with an embodiment is the fact that heights at the top of the foundation slab 12 are all in principle formed so as to be at the same uniform level at locations where a plurality of columns 2 making up the building framework

are installed, and the fact that at least two adhesively anchored anchor bolts 4A are employed at each location where a principal column 2 is installed. (A method of installing adhesively anchored anchor bolts 4A is described in detail below.) Despite the fact that buildings come in a wide variety of sizes and layouts, by making the entire top surface of the foundation slab 12 flat and aligning the bottoms of the principal columns 2 that bear the load of the building so that they are at the same level, it is possible to simplify structural design of foundation 1 as well as the building, and to improve ease of construction.

Note that a sectional view of a sunken floor portion 15, at which the height of the top of foundation has been lowered in stepped fashion relative to the main portion of the building, is shown at the left side of FIG. 1. This sunken floor portion 15 might, for example, be employed at a garage or other such semi-outdoor application. At such sunken floor portion 15, by raising footing beam(s) 16 surrounding that region so as to be higher than foundation slab 17 and aligning top(s) of footing beam(s) 16 so as to be even with the top of foundation slab 12 at the main portion of the building, it is possible to align bottom(s) of column(s) (not shown) surrounding sunken floor portion 15 so as to be at the same level as bottom(s) of other column(s) 2.

OVERALL FOUNDATION CONSTRUCTION METHOD

FIGS. 3 through 5 show construction configuration of a raft foundation employing blocks 13 made of foamed resin.

First, as shown in FIG. 3, the ground is excavated at the site where construction of foundation 1 will be carried out, and appropriate subgrade preparation is performed at the base 101 thereof. Subgrade preparation refers to filling with and compacting of gravel and/or rubble 102, pouring of blinding concrete 103, and other such operations. The outline of the overall foundation is then marked out at this base 101, and perimeter sheathing 104 is erected along the perimeter of the site where construction of foundation 1 will be carried out. Appropriate supports comprising diagonal braces 105 or the like are arranged as necessary at the outside of perimeter sheathing 104.

Within the site where construction of foundation 1 will be carried out, blocks 13 made of foamed resin and serving as embedded filler material are arranged so as to straddle locations where footing beam(s) 11 is/are to be created. Reinforcing bars 14 making up

footing beam(s) 11 are arranged in the gap(s) between adjacent blocks 13 made of foamed resin and in the space(s) along the inside surface of perimeter sheathing 104. Above blocks 13 made of foamed resin, reinforcing bars 14 for foundation slab 12 are combined in lattice-like fashion as viewed from above, and this assembly is tied to reinforcing bars 14 for footing beam(s) 11. In conjunction with laying of these reinforcing bars, steps are undertaken to prevent lifting of blocks 13 made of foamed resin and/or displacement of reinforcing bars 14 at the time that the concrete is poured.

While an embodiment employs post-installation-type adhesively anchored anchor bolts 4A at the connection between foundation 1 and column foot fixture 3, where embedded-type anchor bolts 4B or similar appropriate embedded components, these being distinct from post-installation-type adhesively anchored anchor bolts 4A, are used in combination with post-installation-type adhesively anchored anchor bolts 4A, such embedded components or the like should be installed within forms prior to pouring of concrete. In an exemplary embodiment, gauge member(s) 5 is/are made to span the region above the construction site which is surrounded by perimeter sheathing 104 so as to straddle the entirety of said site, such gauge member(s) 5 being used to position the aforesaid embedded components or the like. C-shaped steel channel is employed as gauge member(s) 5, this being arranged such that the open face thereof is directed upward or downward. In an exemplary embodiment, a plurality of gauge members 5 are arranged in two perpendicular directions so as to mutually overlap. Each gauge member 5 is supported near the ends thereof by jack-type bases 106 or other such supports provided at or further outward beyond perimeter sheathing 104.

As shown in FIG. 4, with gauge member(s) 5 supported in horizontal fashion at prescribed height(s), embedded-type anchor bolt(s) 4B, embedded-type column foot fixture(s) 3B, and so forth are attached to gauge member(s) 5. Circular holes 53, cruciform slits 54, and/or other such retention means are formed at a plurality of locations on the horizontal flat 51 corresponding to the web of the C-shaped steel channel of each gauge member 5, and at either upright section 52 corresponding to the flanges of the C-shaped steel channel of each gauge member 5. These retention means are used to suspend therefrom embedded-type anchor bolt(s) 4B, embedded-type column foot fixture(s) 3B, and/or other such embedded components. Embedded-type anchor bolt 4B is inserted from below into hole 53 formed in horizontal flat 51 of gauge member 5, fastener nut 55 being fastened onto the

upper portion thereof. At embedded-type column foot fixture 3B, embedded-type anchor bolts 4B are fastened by means of nuts to the base plate 31B thereof in advance, and attachment plate 34B is inserted from below into slit 54 of gauge member 5, being coupled to the two upright sections 52 by means of pins and/or bolts 56 which are inserted thereinto from the sides.

After the embedded components and so forth have been positioned in this manner, concrete is poured into the construction site which is surrounded by perimeter sheathing 104. Following curing of concrete, gauge member(s) 5 is/are removed. FIG. 5 shows construction configuration following removal of gauge member(s) 5.

Gauge member 5 employed as described above is made to span so as to straddle the entire site where construction of foundation 1 is carried out, being a temporary fixture that is independent of the form components, reinforcing bars 14, and so forth which are arranged within said construction site. By using gauge member(s) 5 as reference, it is possible to install embedded-type anchor bolt(s) 4B and/or other such embedded components or the like so as to be accurately positioned at any desired location, irrespective of the size, surface features, and so forth of foundation 1. In particular, in the case of a raft foundation at which blocks 13 made of foamed resin and serving as embedded filler material are arranged within the construction site, because there is a possibility that lightweight blocks 13 made of foamed resin will be displaced as a result of being affected by fluid pressure during pouring of concrete, the aforementioned construction method utilizing gauge member(s) 5 can be said to be particularly advantageous for ensuring positional accuracy of embedded components and the like. Because gauge member 5 does not come in direct contact with concrete, it can be used repeatedly.

ANCHOR BOLT INSTALLATION JIG AND METHOD OF EMBEDDING ANCHOR BOLT 4

To install post-installation-type adhesively anchored anchor bolts, the concrete is first allowed to cure, anchor bolt embedding holes are formed in the concrete, and the anchor bolts are embedded therewithin and are affixed to the concrete by means of the chemical reaction of the adhesive. Of the two varieties of adhesively anchored anchor bolts, the capsule type is such that a capsule filled in advance with resin and hardener is inserted into the anchor bolt

embedding hole, chemical reaction of the adhesive being initiated when the sharpened tip of the anchor bolt is hammered thereinto, breaking the capsule; and the injection type is such that resin and hardener are directly injected into the anchor bolt embedding hole prior to screwing the anchor bolt thereinto. An embodiment may employ either of these two types of anchor bolt.

During installation of the adhesively anchored anchor bolt, it is desirable that the anchor bolt embedding hole be accurately formed in the foundation at the proper location in accordance with the building design dimensions, and that the anchor bolt be properly affixed in plumb fashion within the anchor bolt embedding hole. FIGS. 6 and 7 show an embodiment of an anchor bolt installation jig 6 that may be favorably used during such operation.

Anchor bolt installation jig 6 shown by way of example is formed from steel plate and is provided with main plate 61, which is square in shape as viewed from above. At both the front and back faces of main plate 61, cruciform guide grooves 62 having more or less V-shaped cross-sections are formed so as to respectively bisect the length and width dimensions of said main plate 61 and intersect at the center of main plate 61. At each of the respective quadrants into which main plate 61 is partitioned by these cruciform guide grooves 62, one nail hole 63 and one anchor bolt guide hole 64 are respectively formed so as to pass through main plate 61.

Nail hole 63 is a hole through which a nail may be hammered to temporarily mount main plate 61 to the top of foundation 1. Nail holes 63 are formed at locations near the four corners of main plate 61, being arranged at the corners of an imaginary square having the same center as, and sides parallel to, the square formed by the respective edges in the length and width dimensions of main plate 61.

Anchor bolt guide hole 64, is a hole of larger diameter than the aforesaid nail hole 63, the purpose of anchor bolt guide hole 64 being to position drill bit 71 (see FIG. 8) for forming anchor bolt embedding hole 18 or anchor bolt 4A. Anchor bolt guide holes 64 are formed at locations near the center of main plate 61, being arranged at the corners of an imaginary square having the same center as, and sides parallel to, the square formed by the respective edges in the length and width dimensions of main plate 61.

Describing this in more detail, two of the four anchor bolt guide holes 64 are used for maintaining plumb of anchor bolts 4A. Accordingly, the inside diameters thereof are

dimensioned so as to cause anchor bolts 4A to pass therethrough with very little play. The other two anchor bolt guide holes 64 are used for guiding a drill bit 71 which is one size larger than anchor bolt 4A. Accordingly, the inside diameters thereof are dimensioned so as to be somewhat (on the order of 1 to 2 mm) larger than the aforesaid two anchor bolt guide holes 64. These two types of anchor bolt guide hole 64, one type of hole having small diameter and the other type of hole having large diameter, may be arranged such that each set of two holes of the same type are either mutually adjacent or are located along a diagonal. In addition, two varieties of anchor bolt installation jig 6 having different arrangements of the two types of anchor bolt guide holes 64 may be made available and used as appropriate in correspondence to the column 2 installation location.

Four shims 65 are attached by means of adhesive to one side (which shall be referred to as the "back" for the sake of convenience) of main plate 61. Respective shims 65 comprise small pieces of steel plate which all have the same thickness, one shim 65 being arranged, so as not to overlap either nail hole 63 or anchor bolt guide hole 64, at each of the respective quadrants into which main plate 61 is partitioned by cruciform guide grooves 62.

FIG. 8 shows a sequence of operations for using this anchor bolt installation jig 6 to embed adhesively anchored anchor bolts in foundation 1.

First, as shown at (a) in the drawing, main plate 61 is oriented such that the back (the side to which shims 65 are adhesively attached) thereof faces upward, and anchor bolt installation jig 6 is placed on the top of foundation 1. Anchor bolt installation jig 6 is positioned such that cruciform guide groove(s) 62 is/are aligned with chalk line(s) 19 marked on the top of foundation 1, and concrete nails 72 are hammered into nail holes 63 to temporarily secure anchor bolt installation jig 6 thereto. In addition, drill bit 71 of a concrete drill is inserted through each of the large-diameter anchor bolt guide holes 64, and the concrete of foundation 1 is bored to prescribed depth to form anchor bolt embedding holes 18.

Anchor bolt installation jig 6 is then detached therefrom, and compressed air 73 and/or vacuum is used to remove any debris remaining within each of the bored anchor bolt embedding holes 18, as shown at (b) in the drawing. Moreover, as shown at (c) in the drawing, brush 74 is used to clean the inside wall within each anchor bolt embedding hole 18, and compressed air 73 and/or vacuum is again used to remove any dust remaining therewithin.

After the interior of each anchor bolt embedding hole 18 has been cleaned in this fashion, adhesive cartridge nozzle 75 is inserted down to the bottom of each anchor bolt embedding hole 18, and an appropriate amount of adhesive 76 is injected into the bottom of each anchor bolt embedding hole 18, as shown at (d) in the drawing.

Then, as shown at (e) in the drawing, main plate 61 is next oriented such that the front (the side on which shims 65 are not adhesively attached) thereof faces upward, and anchor bolt installation jig 6 is again placed on the top of foundation 1. After aligning cruciform guide groove(s) 62 with chalk line(s) 19, as nail holes 63 of main plate 61 will again be aligned with the nail holes created when concrete nails 72 were hammered thereinto at the step shown at (a) in the drawing, concrete nails 72 for temporarily securing this thereto are again hammered thereinto. With these in this state, as the small-diameter anchor bolt guide holes 64 are now aligned with anchor bolt embedding holes 18, anchor bolts 4A are inserted therethrough. Anchor bolts 4A are slowly screwed thereinto, while making sure not to create any air pockets within anchor bolt embedding holes 18, until they are embedded therein at the prescribed depth. At this time, as adhesive 76 may spill out from the opening of anchor bolt embedding holes 18, main plate 61 is raised to a height that is higher than the top of foundation 1 by way of intervening shims 65 so as to allow such adhesive 76 to escape therefrom.

After anchor bolts 4A are properly embedded therewithin in plumb fashion, anchor bolt installation jig 6 is left in place so that anchor bolts 4A are not disturbed while this cures. Following passage of sufficient time for adhesive 76 to exhibit effective hardness (several hours to several days), anchor bolt installation jig 6 is detached therefrom.

Such procedure makes it possible to embed post-installation-type adhesively anchored anchor bolts in the top of foundation 1 with good precision. Note that the procedure shown by way of example employed installation of injection-type adhesively anchored anchor bolts; in the event that capsule-type adhesively anchored anchor bolts are to be installed, capsules filled with adhesive would be inserted within anchor bolt embedding holes 18 at the aforesaid step shown at (d) in the drawing, and anchor bolts having sharpened tips would be hammered thereinto to break the capsules at the aforesaid step shown at (e) in the drawing.

ANTI-TERMITE STRUCTURE OF FOUNDATION

It is necessary in most parts of Australia to employ termite prevention means at foundation 1. One example of an anti-termite structure suitable for a raft foundation formed as described above is described below.

FIG. 9 shows an enlarged view of the structure at the encircled location in FIG. 1 where foundation 1 meets exterior wall 9. Attached at the top corner of footing beam 11 which runs parallel to the perimeter of the building is termite control barrier 8. Termite control barrier 8 is a long member of uniform cross-section which comprises sheet metal. Termite control barrier 8 is provided with horizontal section 81, which is arranged in overlapping fashion with the top of footing beam 11; upright section 82, which rises in upwardly directed fashion from the inside edge of horizontal section 81; and short pendent section 83, which extends in downwardly directed fashion from the outside edge of horizontal section 81. Upright section 82 is arranged in overlapping fashion with the outside surface of column 2 or column foot fixture 3, which are connected to foundation 1, or of some other member constituting the lower portion of the frame or the like. Horizontal section 81 is arranged in overlapping fashion with the outer portion of footing beam 11 in such fashion that the outside edge of horizontal section 81 projects outward slightly beyond the outside surface of footing beam 11. In addition, the interior of the groove recess bounded by pendent section 83 and horizontal section 81 of termite control barrier 8, and the outside surface of footing beam 11, is filled with termite repellant 84.

Foundation-top flashing 91, which is attached at the outside of termite control barrier 8, is also a long member of uniform cross-section which comprises sheet metal. Foundation-top flashing 91 is provided with sloped portion 911, which slopes downward as one proceeds toward the outside; upright section 912, which extends in upwardly directed fashion from the inside of sloped portion 911; and pendent section 913, which extends in downwardly directed fashion from the outside edge of sloped portion 911, drip edge 914 being formed at the bottom edge of vertical section 913. Upright section 912 of foundation-top flashing 91 is arranged in overlapping fashion with a region in the vicinity of the top of upright section 82 of termite control barrier 8, being secured together with upright section 82 of termite control barrier 8 to a region in the vicinity of the bottom of the frame by means of nails or screws (not shown). Structural board(s) 92 and vapor-permeable waterproof membrane(s) 93 are applied to the outside of the frame, and exterior wall covering(s) 94 is/are attached to the

outside thereof by way of appropriate exterior wall fastener(s) (not shown), such that vent passage(s) 95 is/are formed between vapor-permeable waterproof membrane(s) 93 and exterior wall covering(s) 94. The outside edge of sloped portion 911 of foundation-top flashing 91 projects outward to a location that is as far as or slightly beyond the outside surface of exterior wall covering 94.

As a result of adoption of an anti-termite structure whereby such termite control barrier 8 is attached at location(s) where foundation 1 meets exterior wall 9, it is possible to prevent termites from entering the interior of foundation 1.

INDUSTRIAL UTILITY

The foundation associated with an embodiment may be favorably employed in residential buildings and other such wooden buildings of small or moderate size as well as in steel-frame buildings.

It is to be understood that, if any prior art publication is referred to herein, such reference does not constitute an admission that the publication forms a part of the common general knowledge in the art, in Australia or any other country.

In the claims which follow and in the preceding description of the invention, except where the context requires otherwise due to express language or necessary implication, the word “comprise” or variations such as “comprises” or “comprising” is used in an inclusive sense, i.e. to specify the presence of the stated features but not to preclude the presence or addition of further features in various embodiments of the invention.

2010257353 20 Nov 2014

DOCUMENT NAME: Claims

CLAIM 1

A foundation structure for a building provided with a plurality of footing beams, the foundation structure comprising:

at least one termite control barrier that is made of sheet metal covering a top corner region of at least one of the footing beams that runs parallel to a perimeter of a building constructed on the foundation structure;

the at least one termite control barrier being provided with a horizontal section that projects outward beyond at least one of the footing beams ,and a pendent section that extends in a downwardly directed fashion from an outside edge of the horizontal section;

wherein an interior of a groove recess bounded by the pendent section and the horizontal section, and an outside surface of at least one of the footing beams, is filled with a termite repellant.

FIG.1

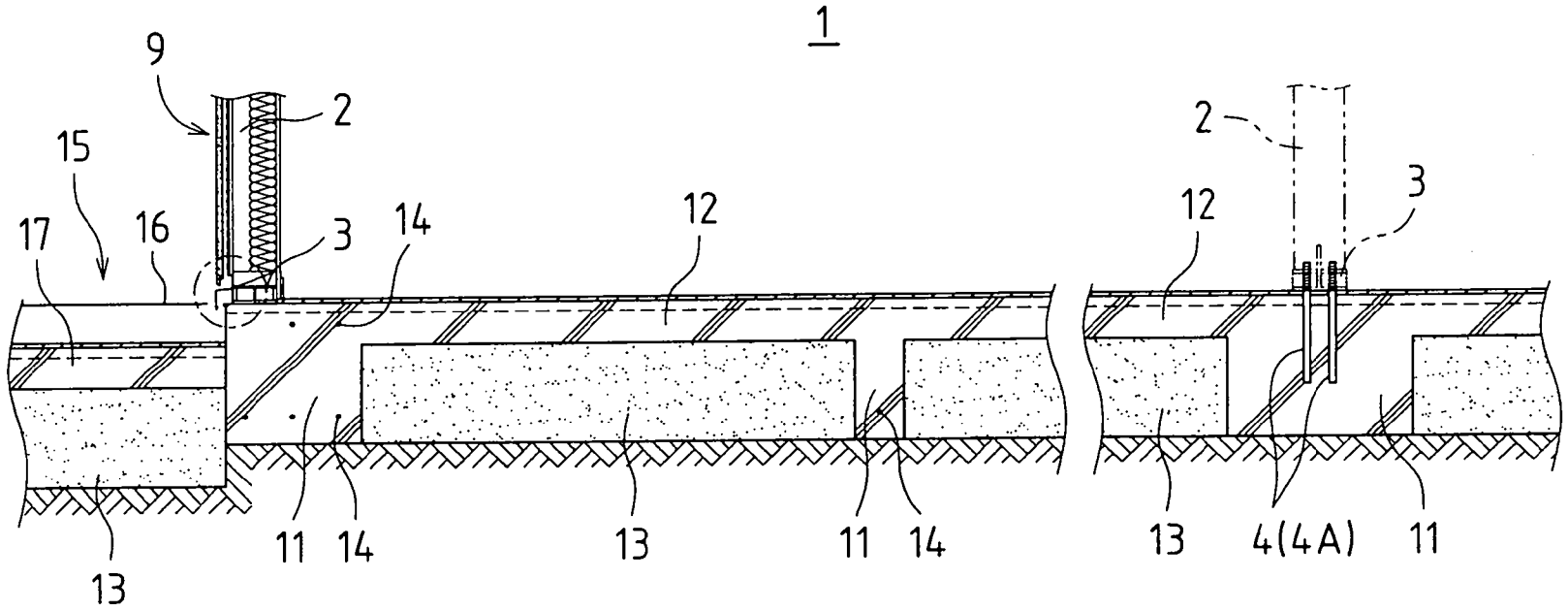

20102257353 21 Dec 2010

FIG.2

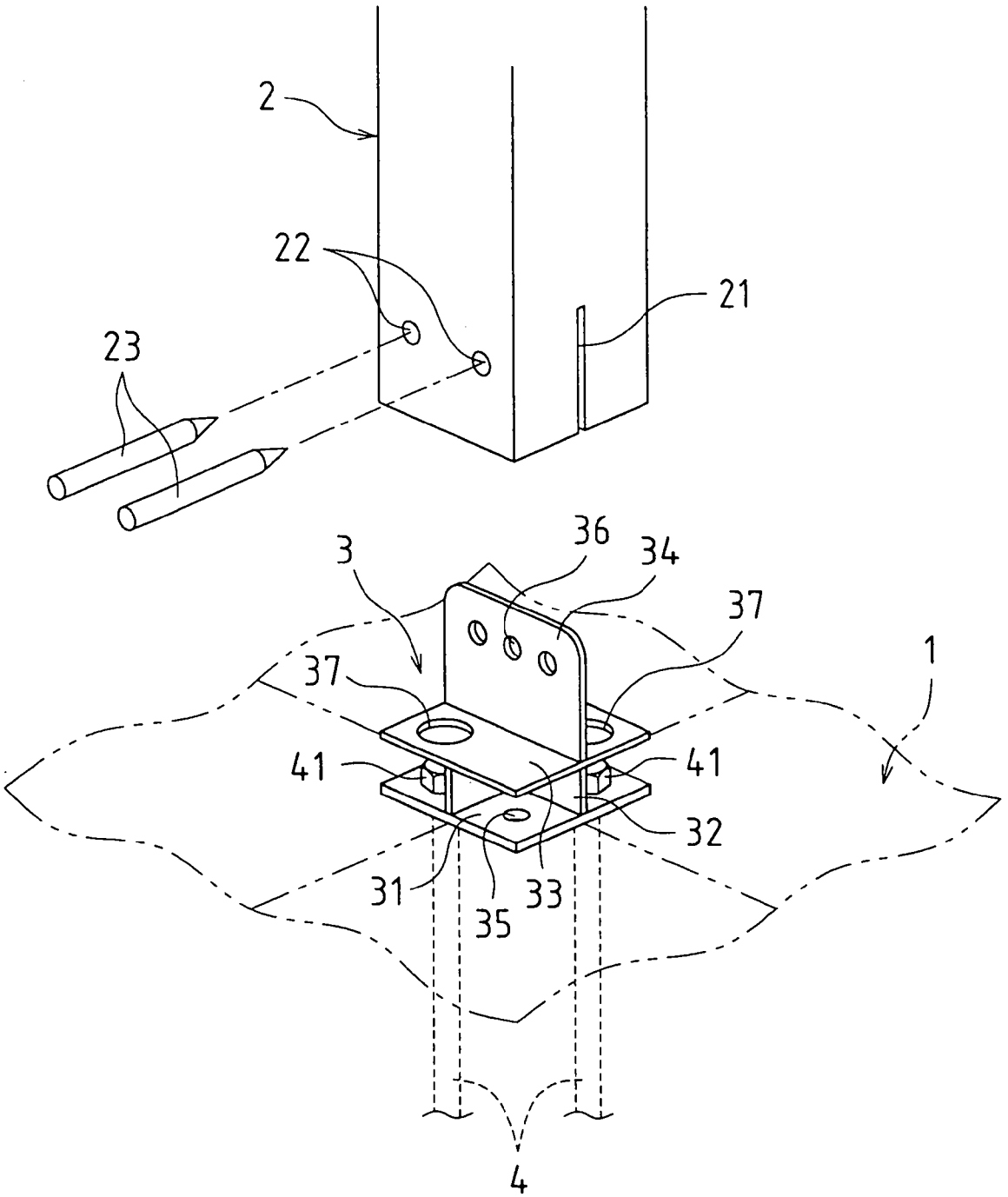

FIG.3

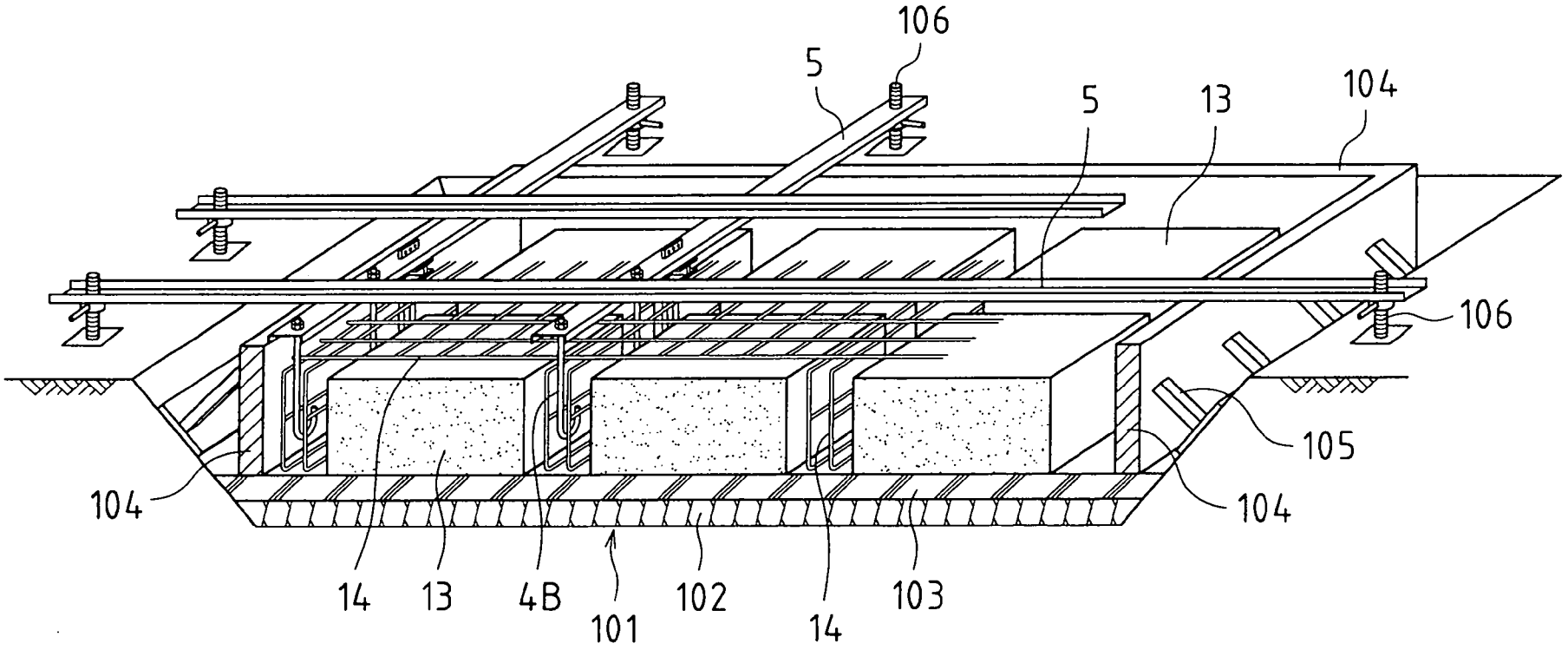

FIG.4

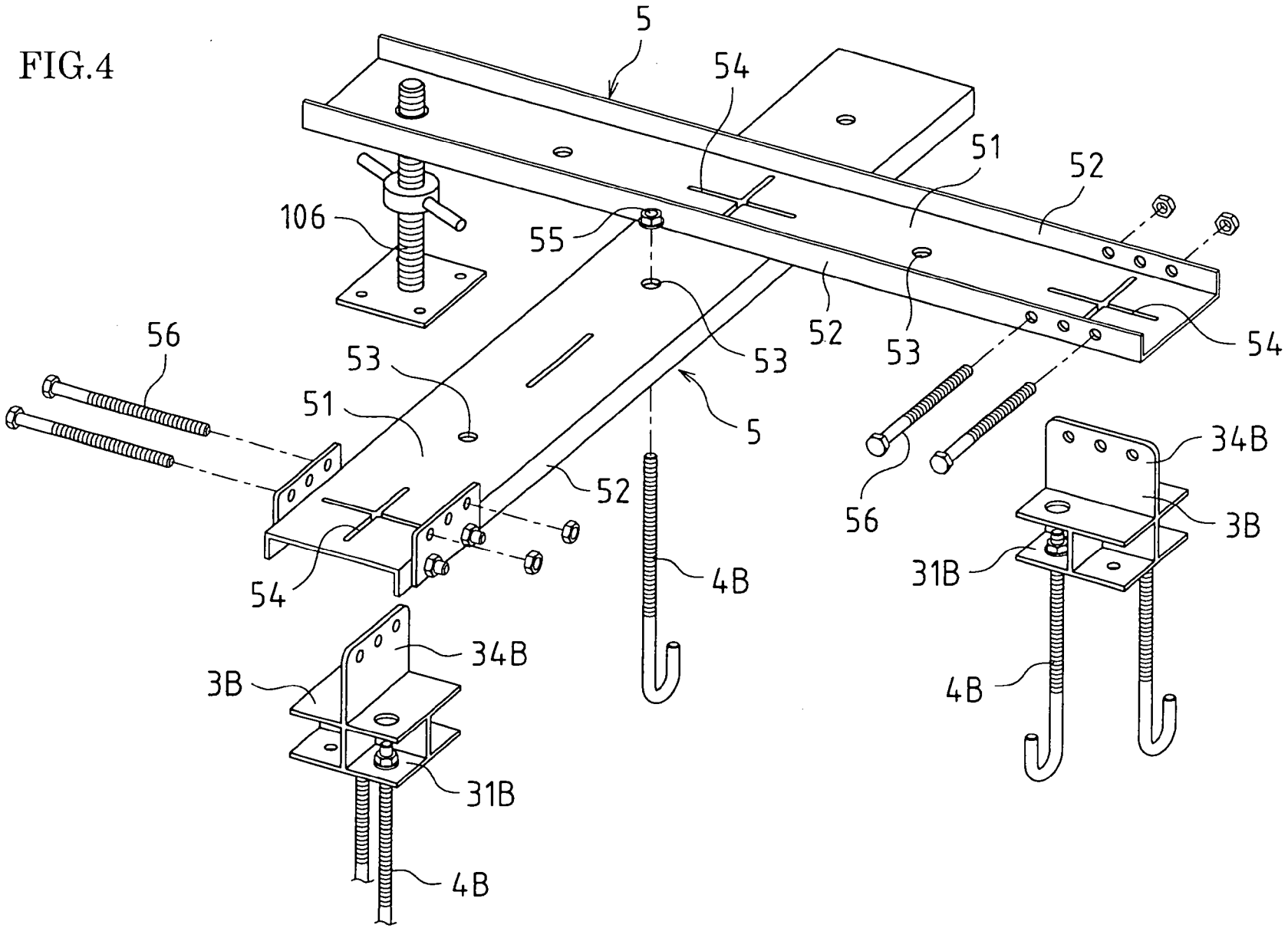
5
54
51
52
106
55
53
52
53
54
56
53
51
5
52
56
34B
3B
54
4B
31B
34B
3B
31B
4B
4B

FIG.5

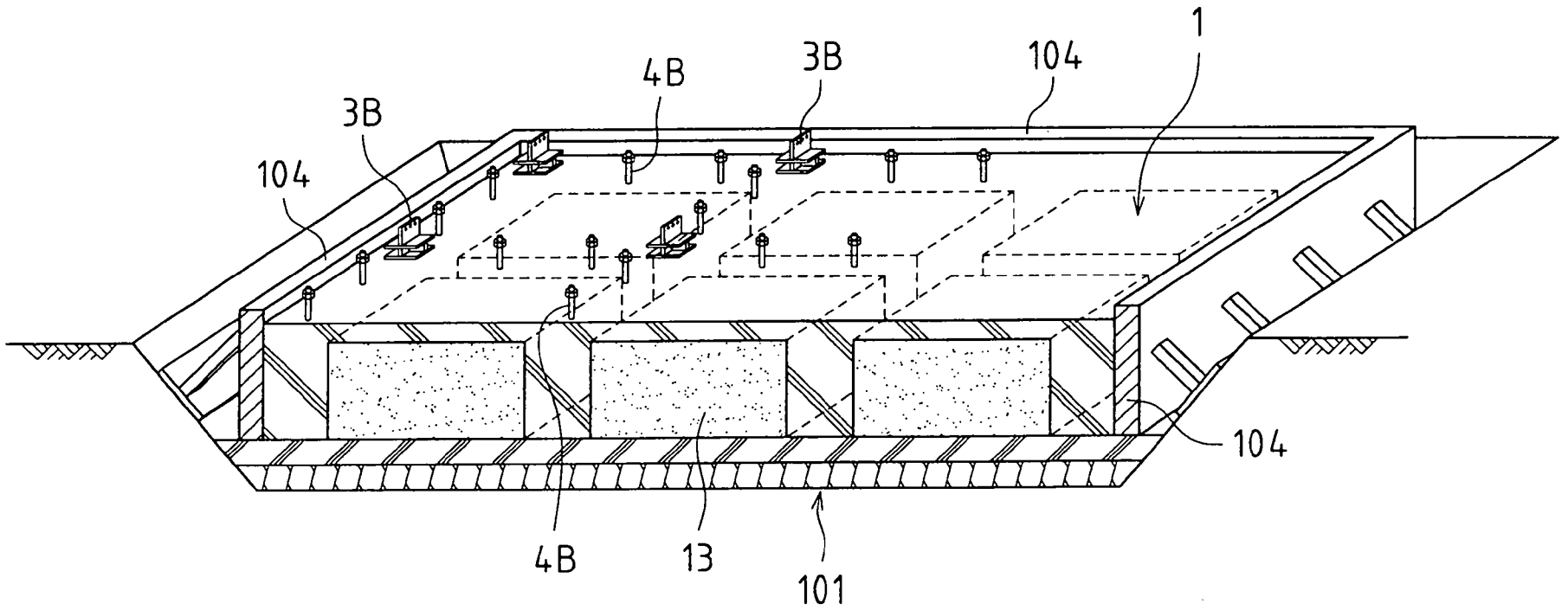

2010257353 21 Dec 2010

FIG.6

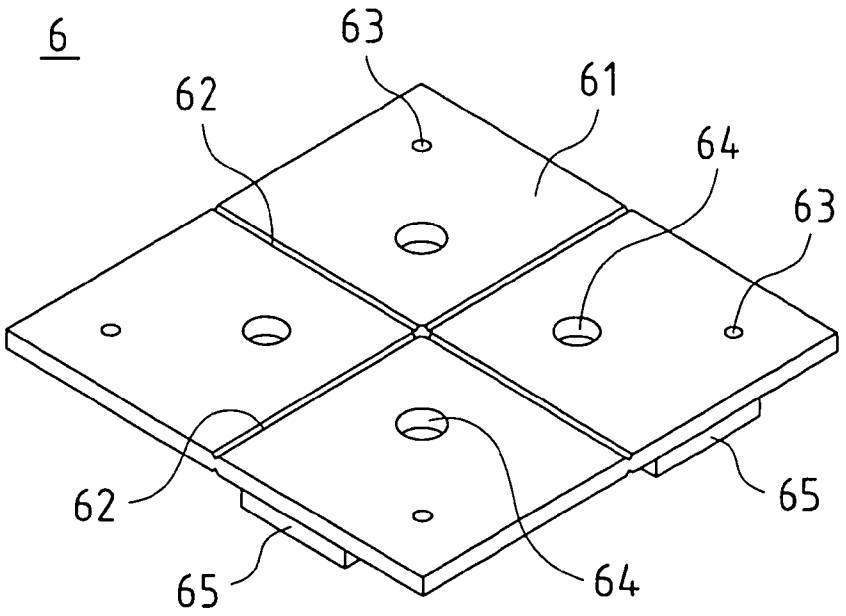

FIG.7

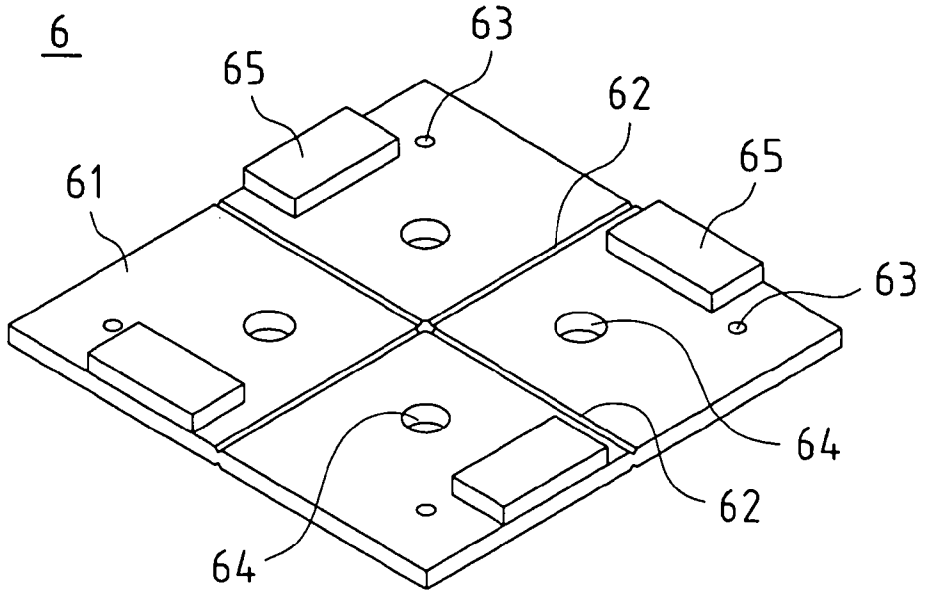

FIG.8

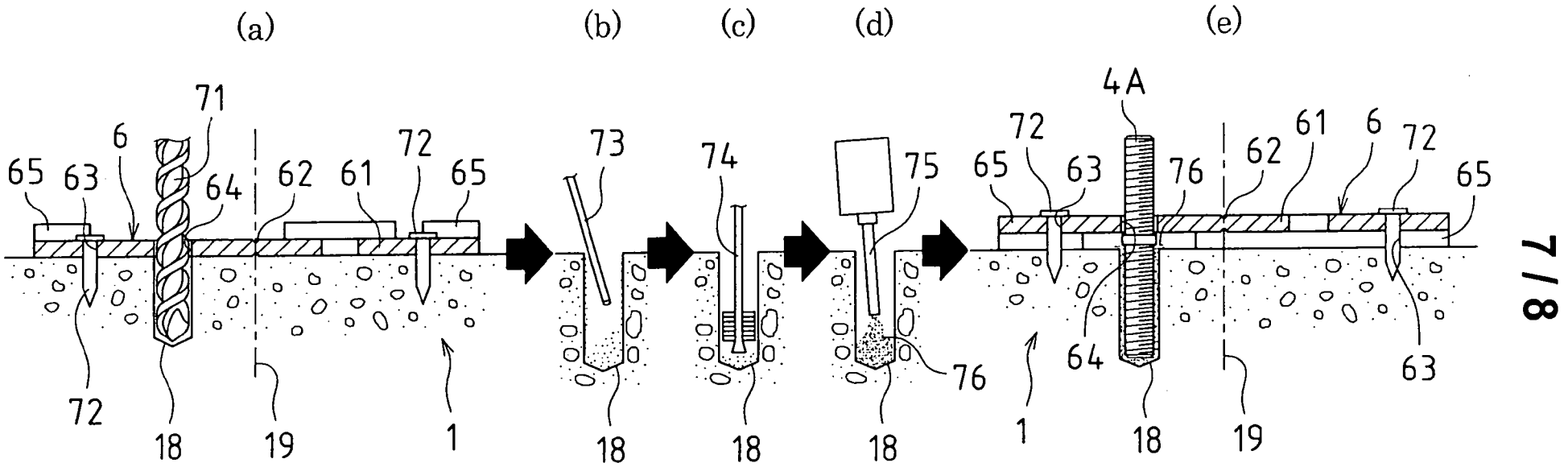
(a)
(b)
(c)
(d)
(e)
71
6
65
63
64
62
61
72
65
72
18
19
1
73
18
74
18
75
76
18
4A
72
65
63
76
62
61
6
72
65
64
1
18
19
63

20102257353 21 Dec 2010

FIG.9

