(12) INTERNATIONAL APPLICATION PUBLISHED UNDER THE PATENT COOPERATION TREATY (PCT)

(19) World Intellectual Property Organization
International Bureau

(43) International Publication Date
22 October 2020 (22.10.2020)

WIPO | PCT

(10) International Publication Number
WO 2020/212817 A1

(51) International Patent Classification:
D04B 9/38 (2006.01) *D04B 1/10* (2006.01)
D04B 15/34 (2006.01) *D04B 1/02* (2006.01)
D04B 15/68 (2006.01) *D04B 15/78* (2006.01)

(21) International Application Number:
PCT/IB2020/053442

(22) International Filing Date:
10 April 2020 (10.04.2020)

(25) Filing Language: Italian

(26) Publication Language: English

(30) Priority Data:
102019000005896 16 April 2019 (16.04.2019) IT

(71) Applicant: **SANTONI S.P.A.** [IT/IT]; Via Carlo Fenzi, 14, 25135 Brescia (IT).

(72) Inventors: **LODRINI, Maurizio**; via Ugoletti, 15/C, 25134 Brescia (IT). **ALGHISI, Mauro**; via Montesuello, 30, 25030 Torbole Casaglia (BS) (IT).

(74) Agent: **ROSA, Daniele**; C/O PGA S.P.A., piazza della Vittoria 7, 25121 Brescia (IT).

(81) Designated States *(unless otherwise indicated, for every kind of national protection available)*: AE, AG, AL, AM, AO, AT, AU, AZ, BA, BB, BG, BH, BN, BR, BW, BY, BZ, CA, CH, CL, CN, CO, CR, CU, CZ, DE, DJ, DK, DM, DO, DZ, EC, EE, EG, ES, FI, GB, GD, GE, GH, GM, GT, HN, HR, HU, ID, IL, IN, IR, IS, JO, JP, KE, KG, KH, KN, KP, KR, KW, KZ, LA, LC, LK, LR, LS, LU, LY, MA, MD, ME, MG, MK, MN, MW, MX, MY, MZ, NA, NG, NI, NO, NZ, OM, PA, PE, PG, PH, PL, PT, QA, RO, RS, RU, RW, SA, SC, SD, SE, SG, SK, SL, ST, SV, SY, TH, TJ, TM, TN, TR, TT, TZ, UA, UG, US, UZ, VC, VN, WS, ZA, ZM, ZW.

(54) Title: A CIRCULAR KNITTING MACHINE

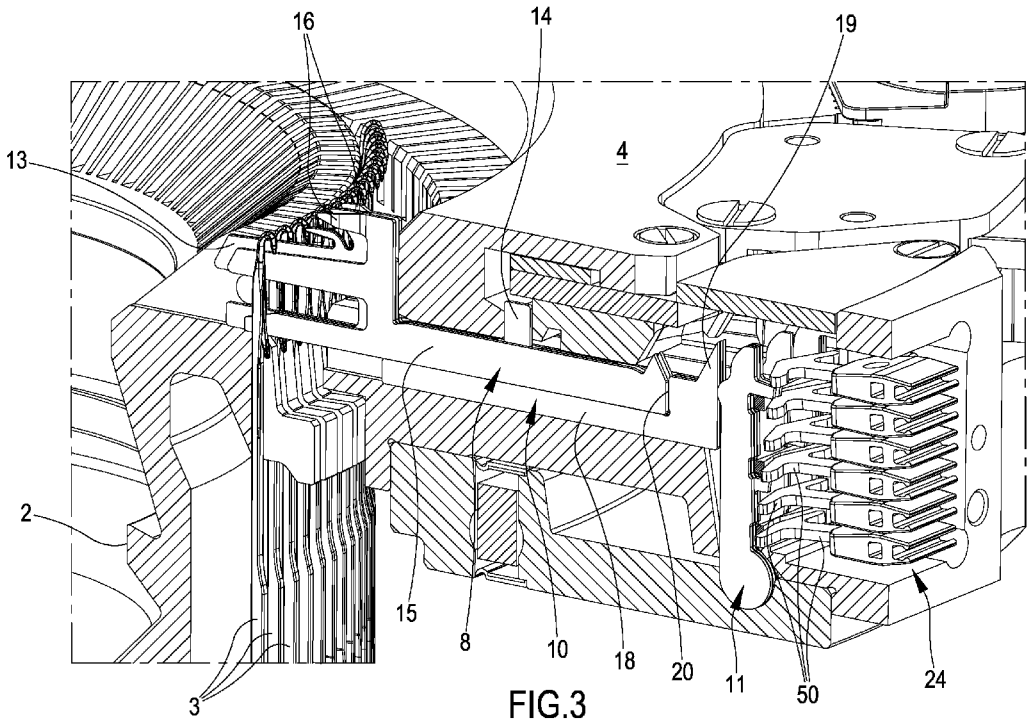

FIG.3

(57) Abstract: A circular knitting machine comprises a plurality of sinkers of a first type (7, 25) configured for cooperating with needles to make a first type of knitting stitch; a plurality of sinkers of a second type (8, 9) configured for cooperating with the needles for making a second type of knitting stitch. First selectors (11', 27) are coupled with the sinkers of the first type (7, 25) by oscillating in a radial plane between a rest position and an operating position so as to deviate the butt (14, 30) of the sinker of the first type (7, 25) along a trajectory of a first guide (39). Second selectors (11) coupled with the sinkers of the second type (8, 9) by oscillating in a radial plane between a rest position and an operating position and acts indirectly upon a respective sinker of the second type (8, 9) so as to deviate the butt (17) of the sinker of the second type (8, 9) along a trajectory of a second guide (42). A fixed selecting actuator (24) can be engaged upon command with the first and/or with the second selectors (11', 27, 11) and is configured for causing the first and/or the

WO 2020/212817 A1

[Continued on next page]

(84) Designated States *(unless otherwise indicated, for every kind of regional protection available)*: ARIPO (BW, GH, GM, KE, LR, LS, MW, MZ, NA, RW, SD, SL, ST, SZ, TZ, UG, ZM, ZW), Eurasian (AM, AZ, BY, KG, KZ, RU, TJ, TM), European (AL, AT, BE, BG, CH, CY, CZ, DE, DK, EE, ES, FI, FR, GB, GR, HR, HU, IE, IS, IT, LT, LU, LV, MC, MK, MT, NL, NO, PL, PT, RO, RS, SE, SI, SK, SM, TR), OAPI (BF, BJ, CF, CG, CI, CM, GA, GN, GQ, GW, KM, ML, MR, NE, SN, TD, TG).

Published:

— *with international search report (Art. 21(3))*

— *before the expiration of the time limit for amending the claims and to be republished in the event of receipt of amendments (Rule 48.2(h))*

second selectors (11', 27, 11) to switch from the rest position to the operating position.

DESCRIPTION

"A circular knitting machine"

Field of the invention

The present invention relates to a circular knitting machine for manufacturing knitted fabric. In particular, the present invention relates to the structure of those elements which, by cooperating with sinkers of different types and with the needles, enable to manufacture said knitted fabric. More specifically, the present invention relates to the individual selection of said elements enabling to produce particular stitches by cooperating with some needles only, whereas adjacent needles make other stitches. Preferably, the present invention relates to circular knitting machines configured for manufacturing fabrics with intarsia motifs (intarsia machines or argyle machines).

Background of the invention

As is known, circular knitting machines comprise a needle-holding element (needle cylinder and/or plate) on which one or more series of needles are arranged along a circular path (circular needlebeds), and devices apt to control the movement of the needles for knitted fabric formation. Knockover sinkers are arranged in radial seats obtained in a ring-shaped body (sinker crown) arranged around the needle-holding cylinder, and said sinkers cooperate with the needles so as to make knitted fabric.

While executing particular designs with circular knitting machines, it known to make open-work knitted fabrics by means of a particular movement of some suitably shaped sinkers and/or terry stitches by means of a particular movement of other suitably shaped sinkers. Said shaped sinkers are usually different from the traditional knockover sinkers used for manufacturing plain knitted fabric.

Document GB449404 discloses by way of example a circular knitting machine equipped with sinkers arranged between the needles and on which interstitch rings are formed. At least one of these sinkers comprises a protruding lateral portion, which is configured for moving an interstitch ring onto an adjacent needle so as to create an opening in the knitted fabric.

Document GB377794 discloses a circular knitting machine equipped with a spreader provided with a pair of blades placed on opposed sides of a sinker and configured for spreading an interstitch and arranging it on one or both adjacent needles.

Document GB410831 discloses a circular knitting machine comprising some sinkers provided with an upper hook or with a pair of hooks placed on the sides of a traditional sinker. Said hooks are configured and moved so as to displace an interstitch on a pair of adjacent needles and make an open work in the fabric. A selector moves the sinker with the hook integrated therein when said hook must work. The selector comprises an oscillating arm provided with butts interacting with a plurality of cams belonging to an actuating device.

It is further known about public document MI2003A001995, which discloses a device for selecting sinkers comprising, for each of the radial grooves housing the sinkers, a selector oscillating in a radial plane with respect to the sinker crown so as to switch between an operating position to a non-operating position or vice versa, which is connected to the corresponding sinker arranged in the corresponding radial groove, so as to

induce a different actuation of the sinker depending on whether the selector is in the non-operating position or in the operating position. Moreover, a selecting actuator is provided, laterally facing the sinker crown and to be engaged upon command with the selector so as to switch it from the non-operating position to the operating position. When the selector is in the non-operating position, the selecting actuator does not intervene, the sinker is actuated by means of actuating cams only and cooperates with the needles for making plain stitches or however other than terry stitches. When the selector is switched to the operating position, said sinker is pushed towards the axis of the sinker crown more than the movement resulting from the actuating cams only, so as to cooperate with the needles in order to make terry stitches.

Public document MI2003A001995 discloses a device for selecting sinkers, comprising for each of the radial grooves housing the sinkers, a selector oscillating in a radial plane with respect to the sinker crown so as to switch between an operating position to a non-operating position or vice versa, which is connected to the corresponding sinker arranged in the corresponding radial groove, so as to induce a different actuation of the sinker depending on whether the selector is in the non-operating position or in the operating position. Moreover, a selecting actuator is provided, laterally facing the sinker crown and to be engaged upon command with the selector so as to switch it from the non-operating position to the operating position. When the selector is in the non-operating position, the selecting actuator does not intervene, the sinker is actuated by means of actuating cams only and follows a first path so as to cooperate with the needles for making plain stitches or however other than terry stitches. When the selector is switched to the operating position, the same sinker is pushed towards the axis of the sinker crown so as to engage and follow a different path defined by the actuating cams. Such a different path radially moves the knockover sinker towards said central axis in advance, with respect to the movement caused by the first path, so as to cooperate with the needles for making terry stitches.

A circular knitting machine configured for manufacturing fabrics with intarsia motifs (intarsia machine) is disclosed for instance in document EP1620590 issued to the same Applicant. Intarsia is a knitting technique enabling to obtain motifs using yarns of different colors in the same knitted course. Intarsia technique is usually used for creating multicolored motifs. As for woodworking technique, which it shares the name with, fields with different colors and materials seem to be fitted together as in a puzzle. Differently from other multicolor knitting techniques, there is only “active” color on a given stitch and the yarn is not moved to the reverse. When a color changes on a given row, the old yarn is left hanging.

Summary

In the framework of circular knitting machines as the ones disclosed above, the Applicant has identified the presence of some drawbacks.

First of all, the Applicant has observed that some known machines are not able to individually select the elements designed to make an open work or a terry stitch or more generally a stitch differing from plain fabric, since these elements are guided by cams and necessarily make all the same movements during each turn of the machines. As a result, the number, arrangement and other features of the open work and/or of the terry stitches to be made are preset and hard to change.

The Applicant has observed that in the solutions described above the control of the elements designed to make the open work (sinkers with protruding lateral portion in GB449404, pair of blades in GB377794, sinkers provided with upper hook in GB410831), i.e. configured for selectively determining whether and when said elements should intervene, is left to complex mechanisms that are hard to configure (drum in GB449404, Dawson's wheel and cam in GB377794, selecting cams in GB410831).

The Applicant has observed that known machines as described for instance in MI2003A001995 show little flexibility since the movements of the mechanisms designed for making terry stitches (springs) are necessarily firmly connected to the movements of the knockover sinkers, in particular of the pin of the knockover sinkers. As a result, the formation of terry stitches/curls with particular shaped/lengths is limited in that the radial travel of the springs is limited by structural constraints acting upon the travel of the sinker pins, or conversely, the formation of plain stitches is limited in that the radial travel of the pins is limited by structural constraints acting upon the sinker springs.

More generally, the Applicant has observed that known circular knitting machines do not allow to manufacture complex knitted fabric with the simultaneous presence of areas with terry stitches, open work and other possible types of stitches, beyond plain fabric, and to arrange said areas as required.

The Applicant has also observed that known circular knitting machines cannot be rapidly setup and/or reconfigured for manufacturing complex fabrics differing from one another.

Under these circumstances, an aim underlying the present invention, in its various aspects and/or embodiments, is to propose a circular knitting machine enabling to manufacture open-work knitted fabrics with the most different features.

A further aim of the present invention is to propose a circular knitting machine which is able to manufacture knitted fabrics provided for instance with open-work areas or with terry stitches or other types, and can be easily configured as a function of the features and positions of the fabric to be obtained.

Another aim of the present invention is to propose a circular knitting machine which is able to manufacture complex knitted fabrics and is compact and relatively simple from a structural point of view as well as relatively cheap and easily maintained.

A further aim of the present invention is to provide a circular knitting machine which is able to manufacture said complex knitted fabrics in relatively short manufacturing times.

A further aim of the present invention is to provide a circular knitting machine configured for manufacturing fabrics with intarsia motifs (intarsia machine or argyle machine), which is also able to manufacture complex fabrics according to the aims listed above.

These and other possible aims, which shall appear better from the following description, are basically achieved by a circular knitting machine for manufacturing a knitted fabric according to one or more of the appended claims and according to the following aspects and/or embodiments, variously combined, possibly also with the aforesaid claims.

In the present description and in the appended claims, the words "upper", "lower", "above" and "below" relate to the positioning of the machine during normal operation with the central axis of rotation in vertical position and the cylinder needles with their heads pointing upwards.

In the present description and in the appended claims, the words "axial", "circumferential", "radial" relate to said central axis.

Some aspects of the invention are listed below.

In one aspect, the invention relates to a circular knitting machine for manufacturing a knitted fabric.

The machine comprises:

- a needle-holding cylinder having a plurality of longitudinal grooves arranged around a central axis of the needle-holding cylinder;
- a plurality of needles, each being housed in a respective longitudinal groove;
- at least one yarn feed operatively associated to the needles;
- a crown arranged around the needle-holding cylinder and having a plurality of radial grooves;
- at least one guiding ring operatively associated to the crown, wherein the crown is rotatable with respect to the guiding ring and around the central axis.

In one aspect, the machine comprises:

- a plurality of sinkers of a first type housed in the radial grooves and radially movable in said radial grooves; each sinker of the first type being configured for cooperating with the needles so as to make a first type of stitch; each sinker of the first type comprising a butt engaged with a first guide obtained in the guiding ring and developing around the central axis; wherein the first guide is configured for moving the sinker of the first type radially when the crown rotates with respect to the guiding ring and around the central axis;
- a plurality of sinkers of a second type housed in the radial grooves and radially movable in said radial grooves; each sinker of the second type being configured for cooperating with the needles so as to make a second type of stitch; each sinker of the second type comprising a butt engaged with a second guide obtained in the guiding ring and developing around the central axis; wherein the second guide is configured for moving the sinker of the second type radially when the crown rotates with respect to the guiding ring and around the central axis.

In one aspect, the machine comprises:

- a plurality of first selectors operatively coupled with the sinkers of the first type, wherein each first selector is movable, preferably oscillating, in a radial plane between a rest position and an operating position, wherein in the operating position the first selector acts directly or indirectly upon a respective sinker of the first type so as to deviate the butt of the sinker of the first type along a trajectory of the first guide;
- a plurality of second selectors operatively coupled with the sinkers of the second type, wherein each second selector is movable, preferably oscillating, in a radial plane between a rest position and an operating position, wherein in the operating position the second selector acts directly or indirectly upon a respective sinker of the second type so as to deviate the butt of the sinker of the second type along a trajectory of the second guide.

In one aspect, the machine comprises:

- at least one selecting actuator laterally facing the crown, fixed with respect to the guiding ring, that can be engaged under control with the first and/or with the second selectors and is configured for causing the first and/or the second selectors to switch from the rest position to the operating position.

The Applicant has found out that the invention enables to solve the problems listed above related to the prior art and thus to obtain the intended aims.

The Applicant has first found out that the invention enables to manufacture highly complex knitted fabrics in relatively short times.

The Applicant has further found out that the invention enables to manufacture complex knitted fabrics of various types and with the most different features.

As a matter of fact, the invention enables to precisely select the sinkers that are required for manufacturing the knitted areas to be obtained by activating or not the respective selectors.

In particular, the machine according to the invention allows to activate selectors acting upon sinkers with different functions so as to manufacture knitted areas with different features, by way of example though not necessarily, open-work knitted areas and areas with terry stitches.

The Applicant has also found out that the machine according to the invention is highly flexible since it allows to switch from manufacturing a type of knitted fabric to a different type in a fast and relatively simple manner, acting upon the selecting actuators.

Further aspects of the invention are listed below.

In one aspect, the circular knitting machine is an intarsia machine, i.e. a machine configured for manufacturing fabrics with intarsia motifs (intarsia machine or argyle machine).

In one aspect, the circular intarsia knitting machine comprises at least two yarn feeds, preferably four feeds, each one configured for working with a respective group of needles arranged along an arc of circle by means of an alternating rotary motion of the needles around the central axis.

In one aspect, said at least two feeds cooperate to form every knitted course by rotating in both directions. In one aspect, at least one motor is operatively connected to the needle-holding cylinder and to the crown so as to make them rotate around the central axis.

In one aspect, cams and/or other types of devices are arranged around the needle-holding cylinder so as to turn the rotational motion of the needle-holding cylinder into an axial motion of the needles.

In one aspect, the machine comprises a plurality of selecting actuators, preferably each one placed on a yarn feed.

In one aspect, the sinkers of the first type are alternated with the sinkers of the second type around the central axis.

In one aspect, the sinkers of the first type are housed in respective first grooves of said plurality of radial grooves, and the sinkers of the second type are housed in respective second grooves of said plurality of radial grooves.

In one aspect, the first grooves are alternated with the second grooves around the central axis.

In one aspect, the sinkers of the first type or the sinkers of the second type are knockover sinkers, each having a pin configured for cooperating with the needles when making a plain knitted fabric.

In one aspect, the sinkers of the first type or the sinkers of the second type are terry sinkers, each having a spring configured for cooperating with the needles when making a terry stitch.

In one aspect, the sinkers of the first type or the sinkers of the second type are open-work sinkers, each having a laterally offset protrusion configured for cooperating with the needles when making an open work.

In one aspect, the sinkers of the first type or the sinkers of the second type are knockover/terry sinkers, each having a pin configured for cooperating with the needles so as to make a plain knitted fabric, and a spring placed above the pin and configured for cooperating with the needles so as to make a terry stitch.

In one aspect, the sinkers of the second type are open-work sinkers, each having a protrusion offset laterally and configured for cooperating with the needles so as to make an open work, and the sinkers of the first type are knockover/terry sinkers, each having a pin configured for cooperating with the needles so as to make a plain knitted fabric, and a spring placed above the pin and configured for cooperating with the needles so as to make a terry stitch.

In one aspect, the sinkers of the second type are open-work sinkers, each having a protrusion offset laterally and configured for cooperating with the needles so as to make an open work, and the sinkers of the first type are terry sinkers, each having a spring configured for cooperating with the needles so as to make a terry stitch.

In one aspect, the machine further comprises a plurality of main knockover sinkers associated with the first guide and guided by said first guide, wherein said main knockover sinkers are uncoupled both from the first selectors and from the second selectors.

In one aspect, each second groove houses a main knockover sinker flanked by at least one open-work sinker, preferably by a right open-work sinker and by a left open-work sinker, wherein said at least one open-work sinker, preferably the right and left open-work sinkers, is/are operatively coupled with at least one second selector.

In one aspect, each first groove houses a knockover/terry sinker operatively coupled with a first selector.

In one aspect, each first groove houses a main knockover sinker flanked by a terry sinker, wherein the terry sinker operatively coupled with a first selector.

In one aspect, the machine may comprise a plurality of sinkers of a n-th type (e.g. with “n” being three to six) housed in the radial grooves and radially movable in said radial grooves; each sinker of the n-th type being configured for cooperating with the needles so as to make a n-th type of stitch; each sinker of the n-th type comprising a butt engaged with a n-th guide obtained in the guiding ring and developing around the central axis; wherein the n-th guide is configured for moving the sinker of the n-th type radially when the crown rotates with respect to the guiding ring and around the central axis.

In one aspect, the machine may comprise a plurality of n-th selectors operatively coupled with the sinkers of the n-th type, wherein each n-th selector is movable, preferably oscillating, in a radial plane between a rest position and an operating position, wherein in the operating position the n-th selector acts directly or indirectly

upon a respective sinker of the n-th type so as to deviate the butt of the sinker of the n-th type along a trajectory of a n-th guide.

In one aspect, the guiding ring comprises a circular track extending around the central axis.

In one aspect, the first selector is a flat element, preferably made of metal.

In one aspect, the first selector exhibits a base portion configured for oscillating around an axis tangent to a horizontal circumference with its center in the central axis.

In one aspect, the first selector exhibits an abutment portion at a distance from the base portion, pointing towards the central axis and configured for directly or indirectly acting upon the sinker of the first type.

In one aspect, the first selector has at least one tooth radially pointing outwards, i.e. on the side opposed to the central axis, and configured for interacting with the selecting actuator.

In one aspect, the second selector is a flat element, preferably made of metal.

In one aspect, the second selector exhibits a base portion configured for oscillating around an axis tangent to a horizontal circumference with its center in the central axis.

In one aspect, the second selector exhibits an abutment portion at a distance from the base portion, pointing towards the central axis and configured for directly or indirectly acting upon the sinker of the second type.

In one aspect, the second selector has at least one tooth radially pointing outwards, i.e. on the side opposed to the central axis, and configured for interacting with the selecting actuator.

In one aspect, the first selectors are identical or basically identical with the second selectors.

In one aspect, the first selectors are slidingly engaged in a circular track obtained in the guiding ring and extending around the central axis so as to rotate together with the sinkers of the first type and with the sinkers of the second type.

In one aspect, the second selectors are slidingly engaged in a circular track obtained in the guiding ring and extending around the central axis so as to rotate together with the sinkers of the first type and with the sinkers of the second type, preferably in the same circular track as the first selectors.

In one aspect, each of the first selectors and each of the second selectors has a base portion with a rounded profile, configured for oscillating in the circular track and around an axis tangent to a horizontal circumference with its center in the central axis, and an abutment portion at a distance from the base portion.

In one aspect, the machine comprises a plurality of first pushing units, each associated to a respective first selector and to at least one respective sinker of the first type.

In one aspect, in the operating position the first selector rests against the first pushing unit and the first pushing unit is configured for pushing against said at least one sinker of the first type.

In one aspect, the first pushing unit is a flat element, preferably made of metal.

In one aspect, the machine comprises a plurality of second pushing units, each associated to a respective second selector and to at least one respective sinker of the second type.

In one aspect, in the operating position the second selector rests against the second pushing unit and the second pushing unit is configured for pushing against said at least one sinker of the second type.

In one aspect, the second pushing unit is a flat element, preferably made of metal.

In one aspect, the first pushing units are identical or basically identical with the second pushing units.

In one aspect, the guiding ring comprises a third guide extending around the central axis and defining a plurality of trajectories.

In one aspect, each of the first pushing units has a butt that is or can be engaged with a third guide obtained in the guiding ring, extending around the central axis and defining a plurality of trajectories.

In one aspect, each first pushing unit is housed in one of the radial grooves together with the respective sinker of the first type, and an abutment portion of the respective first selector faces a radially outer end of the first pushing unit.

In one aspect, each of the second pushing units has a butt that is or can be engaged with a third guide obtained in the guiding ring, extending around the central axis and defining a plurality of trajectories.

In one aspect, each second pushing unit is housed in one of the radial grooves together with the respective sinker of the second type, and an abutment portion of the respective second selector faces a radially outer end of the second pushing unit.

The use of the first and second pushing units, which are operatively located between the first or second selectors and the sinkers of the first or of the second type, allows said selectors to act indirectly upon said sinkers.

In one aspect, each first and/or second pushing unit comprises a horizontal flat bar, wherein the butt is positioned on a radially outer end of the horizontal flat bar.

In one aspect, the butt of each first and/or second pushing unit is flat and extends vertically from the horizontal flat bar.

In one aspect, the butt of each first and/or second pushing unit points upwards.

In one aspect, each first and/or second pushing unit has an abutment surface facing the central axis and configured for resting against the respective sinker of the first type or of the second type.

In one aspect, said at least one selecting actuator comprises at least one selecting lever movable between a first position, in which it lies at a distance from the first selectors and from the second selectors, and a second position, in which it interferes with the first selectors and/or with the second selectors moving in front of the selecting actuator when the crown rotates with respect to the guiding ring and around the central axis, so as to move the first selectors and/or the second selectors from the rest position to the operating position.

In one aspect, the selecting actuator is of magnetic or piezoelectric type.

In one aspect, the present invention also relates to a method for manufacturing knitted fabric using a machine according to one or more of the preceding aspects.

In one aspect, the sinkers of the first type are knockover/terry sinkers, each having a pin configured for cooperating with the needles so as to make a plain knitted fabric, and a spring placed above the pin and configured for cooperating with the needles so as to make a terry stitch; the sinkers of the second type are open-work sinkers, each having a protrusion offset laterally and configured for cooperating with the needles so as to make an open work; and the method comprises: keeping the first selectors and the second selectors in the rest position, while the crown rotates with respect to the guiding ring and around the central axis, so as

to move the knockover/terry sinkers along a second trajectory and a first trajectory of the first guide, so that the pins, by cooperating with the needles, make a plain knitted fabric, and to keep the open-work sinkers along a radially outer trajectory of the second guide in a non-operating position.

In one aspect, while the first selectors and the second selectors are in the rest position, the first pushing units and the second pushing units move along a radially outer trajectory of the third guide; wherein the first pushing units are radially at a distance from the respective knockover/terry sinkers; wherein the second pushing units are radially at a distance from the respective open-work knockover sinkers.

In one aspect, the method comprises: engaging said at least one selecting actuator with at least one of the second selectors so as to move said at least one second selector in the operating position for at least one rotational portion of the crown around the central axis, while the first selectors are kept in the rest position, so as to move said at least one open-work sinker associated to said at least one second selector on a radially inner trajectory of the second guide and move the laterally offset protrusion towards the central axis for at least one rotational portion of the crown around said central axis, so as to make, by cooperating with at least one needle, an open work in the knitted fabric.

In one aspect, the second pushing unit associated with said second selector is pushed radially by the respective second selector towards the central axis, gets on a radially inner trajectory of the third guide and pushes said at least one open-work sinker on the radially inner trajectory of the second guide.

In one aspect, the method comprises: engaging said at least one selecting actuator with at least one of the first selectors so as to move said at least one first selector in the operating position for at least one rotational portion of the crown around the central axis, while the second selectors are kept in the rest position, so as to move said at least one knockover/terry sinker associated to said at least one first selector on the second trajectory of the first guide, so that the spring of the knockover/terry sinker makes a terry stitch by cooperating with at least one needle.

Further characteristics and advantages shall be more evident from the detailed description of a preferred embodiment of a circular knitting machine for manufacturing a knitted fabric and of a method for manufacturing knitted fabric according to the present invention.

Description of the drawings

This description shall be made below with reference to the accompanying drawings, provided to a merely indicative and therefore non-limiting purpose, in which:

- Figure 1 shows a portion of a circular knitting machine according to the present invention with some parts removed for better showing others;
- Figure 2 shows the portion of Figure 1 with other parts removed for better showing other elements of the machine as in the preceding figures;
- Figure 3 shows a different, partially sectioned view of the portion of Figure 1;
- Figure 4 shows an exploded view of an assembly of elements belonging to the machine as in the preceding figures, which can be seen in Figure 3;
- Figure 5 shows the assembly of Figure 4 with the elements associated to one another;

- Figures 6 and 7 show a variant of the elements as in Figures 4 and 5;
- Figure 8 shows a different, partially sectioned view of the portion of Figure 1;
- Figure 9 shows an exploded view of a different assembly of elements belonging to the machine as in the preceding figures, which can be seen in Figure 8;
- Figure 10 shows the assembly of Figure 9 with the elements associated to one another;
- Figure 11 shows a schematic plan view of a portion, including a guiding ring, of the machine as in the preceding figures; and
- Figures 12 to 16 show the portion of Figure 11, in which respective operating steps of the machine according to the invention are pointed out in a schematic manner.

Detailed description

With reference to the figures mentioned, the numeral 1 globally designates a portion of a knitting head of a circular knitting machine according to the present invention. The circular knitting machine shown is a machine configured for manufacturing fabrics with intarsia motifs (intarsia machine or argyle machine). The circular knitting machine comprises a basement, not shown since it is of known type, constituting the supporting structure of the machine, and said knitting head 1 is mounted onto the basement.

The knitting head 1 is equipped with a needle-holding cylinder 2, with a plurality of needles 3 mounted onto the needle-holding cylinder 2, and with control means, not shown, apt to selectively actuate the needles 3 so as to enable the production of a fabric. The needle-holding cylinder 2 is usually mounted in vertical position onto the basement, with the needles 3 arranged vertically and protruding beyond an upper edge of the needle-holding cylinder 2.

As is known, the needle-holding cylinder 2 has a plurality of longitudinal grooves obtained on a radially outer surface of the needle-holding cylinder 2. The longitudinal grooves are arranged around a central axis “X-X” (vertical) of the needle-holding cylinder 2 and develop parallel to said central axis “X-X”. Each longitudinal groove houses a respective needle 3 and a respective drive chain comprising a plurality of flat parts. Actuating cams are arranged as a casing around the needle-holding cylinder 2 and lie facing the radially outer surface of the cylinder 2 and thus the longitudinal grooves and the drive chains. These actuating cams are defined e.g. by plates and/or grooves arranged on an inner surface of the casing.

In one embodiment, the casing of the actuating cams is basically stationary, whereas the needle-holding cylinder 2 rotates (with a continuous or alternating motion in both directions) around the central axis “X-X” by means of a suitable motor, so as to generate a relative rotational motion between the drive chains and the actuating cams and turn the rotational motion of the needle-holding cylinder 2 into an axial motion of the needles 3 in order to manufacture knitted fabric by means of the said needles 3.

The machine further comprises a crown 4 arranged around the needle-holding cylinder 2 and having a plurality of first radial grooves 5 and second radial grooves 6 that are open on a radially inner edge of the crown 4, i.e. towards the central axis “X-X”. The first radial grooves 5 and the second radial grooves 6 alternate along a circumferential development of the crown 4, i.e. each first radial groove 5 is flanked by two second radial grooves 6 and each second radial groove 6 is flanked by two first radial grooves 5. The crown 4

is moved in rotation around the central axis "X-X" together with the needle-holding cylinder 2, e.g. by means of the same motor.

Suitable devices, not shown, feed the yarns to be knitted on one or more yarn feeding points (known as feeds) usually arranged above the needle-holding cylinder 2. The circular intarsia knitting machine shown comprises four yarn feeds, each one configured for working with a respective group of needles 3 arranged along an arc of circle (e.g. a 90° arc) by means of an alternating rotary motion of the needles 3 around the central axis "X-X". The four feeds cooperate to form every knitted course by rotating in both directions.

Each of the second radial grooves 6 houses an assembly made up of a plurality of metal flat parts that can slide radially in the respective second radial groove 6 and also one with respect to the other. This assembly, better shown in Figures 4 and 5, comprises a knockover/terry sinker 7, a right open-work sinker 8, a left open-work sinker 9, two pushing units 10, one associated to the right open-work sinker 8 and the other one to the left open-work sinker 9, and a selector 11 for each of the pushing units 10.

The knockover/terry sinker 7 comprises a main body shaped as a horizontal flat bar 12 oriented as the second groove 6, i.e. along a radial direction, and a vertical flat upright developing from the horizontal flat bar 12. A pin 13 having a per se known shape is arranged on an upper end of the vertical flat upright and faces the central axis "X-X" when said assembly is properly mounted to the machine. The knockover/terry sinker 7 further comprises a flat butt 14 extending vertically upwards from the horizontal flat bar 12 and at a distance from a radially outer end (with respect to the central axis "X-X") of the horizontal flat bar 12. The knockover/terry sinker 7 is made up of a single flat metal part, e.g. a cut part.

The right open-work sinker 8 comprises a main body shaped as a horizontal flat bar 15 and a vertical flat upright developing from the horizontal flat bar 15. A protrusion 16 is arranged on an upper end of the flat upright. The protrusion 16 extends like a sort of arm, when the assembly is properly mounted to the machine, towards the central axis "X-X" and is offset laterally with respect to a lying plane of the respective main body. The right open-work sinker 8 further comprises a flat butt 17 extending vertically upwards from the horizontal flat bar 15 and is placed near a radially outer end (with respect to the central axis "X-X") of the horizontal flat bar 15. The right open-work sinker 8 is made up of a single flat metal part, e.g. a cut, stamped and/or bent part.

The left open-work sinker 9 comprises the same elements as the right open-work sinker 8 and is structurally identical with or corresponding to the right open-work sinker 8, except for the fact that the respective protrusion 16 is offset/displaced, with respect to its main body, to the opposed side. The right open-work sinker 8 and the left open-work sinker 9 therefore have respective protrusions 16 that are laterally displaced in opposed directions with respect to its main body and with respect to the knockover/terry sinker 7 placed between them.

When this assembly is properly mounted in the respective second groove 6, the right open-work sinker 8 and the left open-work sinker 9 are arranged on opposed sides of the respective knockover/terry sinker 7 (Figure 5). The right open-work sinker 8 and the left open-work sinker 9 exhibit respective protrusions 16 that are laterally offset towards opposed sides of said knockover/terry sinker 7 and placed above the pin 13 of the

respective knockover/terry sinker 7. Moreover, the butt 14 of the knockover/terry sinker 7 is radially placed between the butt 17 and the protrusion 16 of the respective open-work sinkers 8, 9.

The two second pushing units 10 of this assembly are identical with one another. Each of the second pushing units 10 comprises a horizontal flat bar 18 and a butt 19 that is flat, is placed on a radially outer end, with respect to the central axis "X-X", of the horizontal flat bar 18 and extends vertically upwards. The second pushing unit 10 further has an abutment surface 20 facing the central axis "X-"X and configured for resting against the respective open-work sinker 8, 9. The abutment surface 20 of the second pushing unit 10 is placed near the butt 19 of said pushing unit 10, i.e. near said radially outer end of the horizontal flat bar 18. More particularly, a portion of the second pushing unit placed near said radially outer end extends vertically upwards and defines the abutment surface 20 and the respective butt 19. Also the second pushing unit 10 is made up of a single flat metal part, e.g. a cut part.

When this assembly is properly mounted in the respective second groove 6 (Figure 5), the horizontal flat bar 18 of each pushing unit 10 is located under and in contact with the flat bar 15 of the respective open-work sinker 8, 9 and the abutment surface 20 faces the radially outer end of the respective open-work sinker 8, 9. The knockover/terry sinker 7 is placed between the right open-work sinker 8 and the left open-work sinker 9.

Each of the two second selectors 11 is a metal, basically flat element mainly developing vertically when it is properly mounted in the machine. The second selector 11 has a base portion 21 with a rounded profile and configured for oscillating around an axis tangent to a horizontal circumference with its center in the central axis "X-X". The second selector 11 lies and oscillates in a radial plane. The second selector 11 further exhibits an abutment portion 22 at a distance from the base portion 21, pointing towards the central axis "X-X" and configured for indirectly acting upon the respective open-work sinker 8, 9 through the respective second pushing unit 10. The second selector 11 further has a tooth 23 located on an edge of the flat element radially opposed to the abutment portion 22 and radially pointing outwards, i.e. to the opposed side with respect to the central axis "X-X".

The abutment portion 22 has a rounded projection configured and sized for resting against the radially outer end of the horizontal flat bar 18 of the respective second pushing unit 10 of the assembly.

Each second selector 11 is oscillating in the radial plane between a rest position and an operating position. In the rest position, the abutment portion 22 of the second selector 11 is located in a radially outer position and does not get in contact with the respective second pushing unit 10. In the operating position, the second selector 11 is rotated towards the central axis "X-X", the abutment portion 22 of the second selector 11 is located in a radially inner position and is configured for resting and pushing against the respective second pushing unit 10 towards the central axis "X-X". The second pushing units 10 are configured in their turn for pushing the open-work sinkers 8, 9.

The switching from the rest to the operating position of the second selector 11 is caused by a second group of levers of the selecting actuators 24 (Figures 2, 3 and 8) acting upon a tooth 23 of the second selector 11 and whose structure shall be described in more detail below. In the embodiment shown by way of example, there are four selecting actuators 24 which are stationary with respect to the casing and are arranged at the same

angular distance (90° from one another) around the crown 4. In particular, each of said selecting actuators 24 is located on a yarn feed.

Also the knockover/terry sinker 7 is pushed by a respective first pushing unit 10' and by a respective first selector 11', which are wholly similar to the second pushing unit 10 and to the second selector 11. For this reason the same elements have been referred to with the same reference numerals with an apostrophe.

The first selector 11' exhibits a base portion 21' and an abutment portion 22' at a distance from the base portion 21', pointing towards the central axis "X-X" and configured for indirectly acting upon the respective knockover/terry sinker 7 through the respective first pushing unit 10'.

The first selector 11' further has a tooth 23' located on an edge of the flat element radially opposed to the abutment portion 22' and radially pointing outwards, i.e. to the opposed side with respect to the central axis "X-X". The abutment portion 22' has a rounded projection configured for resting against the radially outer end of the respective horizontal flat bar 18' of the first pushing unit 10'.

Each of the first pushing units 10' further exhibits a respective butt 19' and a respective abutment surface 20' configured for resting against the respective knockover/terry sinker 7.

The knockover/terry sinker 7 is further provided with a spring 31 so as to make terry stitches in cooperation with the needles 3.

As can be observed, the position of the tooth 23' of the first selector 11' differs from the one of the teeth 23 of the two second selectors 11, so that the selecting actuators 24 can catch the teeth 23 or as an alternative the teeth 23' depending on whether said assembly should work for making a hole in the fabric or make a terrycloth stitch, respectively.

The knockover/terry sinkers 7 are sinkers of a first type configured for cooperating with the needles for making a plain knitted fabric or, when interacting with the first selectors 11' and with the first pushing units 10', a first type of knitting stitch, i.e. a terry stitch.

The open-work sinkers 8, 9 are sinkers of a second type configured for cooperating with the needles for making, when interacting with the second selectors 11 and with the second pushing units 10, a second type of knitting stitch, i.e. an open-work stitch.

Each of the first radial grooves 5 houses a respective assembly which is again made up of a plurality of metal flat parts that can slide radially in the respective first radial groove 5 and also one with respect to the other. This assembly, better shown in Figures 9 and 10, comprises an knockover/terry sinker 25, a first pushing unit 26 and a first selector 27.

The knockover/terry sinker 25 comprises a main body shaped as a horizontal flat bar 28 oriented as the first groove 5, i.e. along a radial direction, and a vertical flat upright developing from the horizontal flat bar 28. A pin 29 having a per se known shape develops from the vertical flat upright and faces the central axis "X-X" when this assembly is properly mounted to the machine. The knockover/terry sinker 25 further comprises a flat butt 30 extending vertically upwards from the horizontal flat bar 28 and at a distance from a radially outer end (with respect to the central axis "X-X") of the horizontal flat bar 28. The knockover/terry sinker 25 further comprises a spring 31 located above the pin 29 and configured for making terry stitches in cooperation with

the needles 3. The knockover/terry sinker 25 is basically identical with the knockover/terry sinker 7. The knockover/terry sinker 25 is made up of a single flat metal part, e.g. a cut part.

The first pushing unit 26 of said assembly is basically identical with each of the first and second pushing units 10, 10'. The first pushing unit 26 comprises a horizontal flat bar 32 and a butt 33 that is flat, is placed on a radially outer end, with respect to the central axis "X-X", of the horizontal flat bar 32 and extends vertically upwards. The first pushing unit 26 further has an abutment surface 34 facing the central axis "X-"X and configured for resting against the respective knockover/terry sinker 25. The abutment surface 34 of the first pushing unit 26 is placed near the butt 33 of said pushing unit 26, i.e. near said radially outer end of the horizontal flat bar 32. More particularly, a portion of the first pushing unit 26 placed near said radially outer end extends vertically upwards and defines the abutment surface 34 and the respective butt 33. Also the first pushing unit 26 is made up of a single flat metal part, e.g. a cut part.

When the assembly described above is properly mounted in the respective first groove 5 (Figure 8), the horizontal flat bar 32 of each first pushing unit 26 is located under and in contact with the flat bar 28 of the respective knockover/terry sinker 25 and the abutment surface 34 faces the radially outer end of said respective knockover/terry sinker 25.

The first selector 27 of said assembly is similar to the second selector 11 and to the first selector 11'. The first selector 27 is a metal flat element mainly developing vertically when it is properly mounted in the machine. The first selector 27 has a base portion 35 with a rounded profile and configured for oscillating around an axis tangent to a horizontal circumference with its center in the central axis "X-X". The first selector 27 lies and oscillates in a radial plane. The first selector 27 further exhibits an abutment portion 36 at a distance from the base portion 35, pointing towards the central axis "X-X" and configured for indirectly acting upon the respective knockover/terry sinker 25 through the respective first pushing unit 26. The first selector 27 further has a tooth 37 located on an edge of the flat element radially opposed to the abutment portion 36 and radially pointing outwards, i.e. to the opposed side with respect to the central axis "X-X". The abutment portion 36 has a rounded projection configured for resting against the radially outer end of the respective horizontal flat bar 32 of the first pushing unit 26.

The first selector 27 is oscillating in the radial plane between a rest position and an operating position. In the rest position, the abutment portion 36 of the first selector 27 is located in a radially outer position and does not get in contact with the respective first pushing unit 26. In the operating position, the first selector 27 is rotated towards the central axis "X-X", the abutment portion 36 of the first selector 27 is located in a radially inner position and is configured for resting and pushing against the first auxiliary pushing unit 26. The first auxiliary pushing unit 26 is configured for pushing against the knockover sinker/terry 25. The switching from the rest to the operating position of the first selector 27 is caused by a first group of levers of the same selecting actuators 24 as mentioned above.

The knockover/terry sinkers 25 are sinkers of a first type configured for cooperating with the needles for making a plain knitted fabric or, when interacting with the first selectors 27' and with the first pushing units 26', the first type of knitting stitch as already mentioned above, i.e. a terry stitch.

In the embodiment of Figures 1 and 2, the sinkers of the first type 7, 25 are therefore alternated with the sinkers of the second type 8, 9 around the central axis "X-X". The first grooves 5 house sinkers of the first type 25, whereas the second grooves 6 house sinkers of the first type 7 as well as of the second type 8, 9.

In the variant of embodiment as shown in Figures 6 and 7, the knockover sinker 7' (which will be referred to as main sinker) does not have the spring 31 for making terry stitches, and is not associated to a respective first pushing unit 10' and to a respective first selector 11'. Moreover, this assembly is provided with one second selector 11 only which acts simultaneously or almost simultaneously against the radially outer end of the horizontal flat bar 18 of both second pushing units 10. The knockover sinker 7' of the variant of the assembly of Figures 6 and 7 is operatively uncoupled from the second selector 11 and from the second pushing units 10 associated to the open-work sinkers 8, 9, i.e. the second selector 11 and the second pushing units 10 do not interact with the knockover sinker 7' since they do not cause/control the movements thereof. In this variant of Figures 6 and 7, the use of knockover/terry sinkers 25 of the other assemblies (of the type shown in Figures 9 and 10) allows to make terry stitches (with the spring 31), whereas the use of knockover sinkers 7' as in the variant (shown in Figures 6 and 7) does not allow to make terry stitches.

In the embodiment of Figures 6 and 7, the first grooves 5 house sinkers of the first type 25, whereas the second grooves 6 house sinkers of the second type 8, 9 as well as the main knockover sinkers 7' uncoupled both from the first selectors and from the second selectors.

In other embodiments, not shown, the sinkers of the first type and the sinkers of the second type can be different from a structural and geometrical point of view, and they can be arranged in a different manner; for instance, the sinkers of the first type are housed in respective first grooves and the sinkers of the second type are housed in respective second grooves and the first grooves are alternated with the second grooves around the central axis.

In other embodiments, not shown, there can also be more than two types of sinkers associated to respective selectors.

A guiding ring 38 (see Figure 11), consisting of one or more parts, is operatively associated to the crown 4. The guiding ring 38 is coaxial with the central axis "X-X" and is stationary as the casing, i.e. the crown 4 is rotatable with respect to the guiding ring 38 around the central axis "X-X". The selecting actuators 24 are therefore stationary with respect to the guiding ring 38 and laterally face the crown 4. In the embodiment shown, the guiding ring 38 develops partly under and partly over the crown 4 and has a plurality of guides extending around the central axis "X-X" and configured for engaging with the metal parts of the assemblies described above. These guides are for instance grooves delimited by cams.

The butt 14 of the knockover/terry sinker 7 and the butt 30 of the knockover/terry sinker 25 engage into a first guide 39 obtained in an upper portion of the guiding ring 38. The first guide 39 is configured for radially moving the knockover/terry sinkers 7 and the knockover/terry sinkers 25 along the respective second radial grooves 6 and the respective first radial grooves 5 when the crown 4 rotates with respect to the guiding ring 38 and around the central axis "X-X".

As can be seen in Figures 11 to 16, the first guide 39 has some portions with a radial width that basically corresponds to the size of the butts 14, 30 of the knockover/terry sinker 7 and of the knockover/terry sinker 25, alternating with other wider portions. Said larger portions are provided with or define a respective radially outer path and a respective radially inner path (with respect to the central axis "X-X") for said butts 14, 30 and thus for the respective knockover/terry sinker 7 and knockover/terry sinker 25. As a result, the first guide 39 defines a first trajectory 40 comprising said radially outer paths for some of said wider portions and said radially inner paths for others of said wider portion, and a second trajectory 41 comprising radially inner paths for all of said wider portions (Figures 12, 13 and 16). Two of said wider portions are positioned upstream and downstream from each yarn feed and from each selecting actuator 24.

The butts 17 of the open-work sinkers 8, 9 of each assembly engage into a second guide 42, obtained again in the upper portion of the guiding ring 38. The second guide 42 is located in a radially outer position with respect to the first guide 39, i.e. it surrounds it. The second guide 42 comprises a plurality of paths defining a radially outer trajectory 43 that is basically circular, a radially inner path 44 that is basically circular, and a plurality of connecting portions 45 between the radially outer trajectory 43 and the radially inner trajectory 44 (Figure 11).

The butts 19, 19' of the first and second pushing units 10, 10', 26 engage into a third guide 46, obtained again in the upper portion of the guiding ring 38. Also the third guide 46 extends around the central axis "X-X" and defines a plurality of trajectories. In particular, the third guide 46 defines a radially outer trajectory 47 and a plurality of radially inner trajectories 48 placed one after the other around the central axis "X-X". The radially outer trajectory 47 of the third guide 46 is radially further outer with respect to the second guide 42, i.e. it surrounds it. Each of the radially inner trajectories 48 is bow-shaped and has opposed ends connected to the radially outer trajectory 47 of the third guide 46. Each of the radially inner trajectories 48 departs from the radially outer trajectory 47 of the third guide 46 getting near the central axis "X-X", and then gets away again from the central axis "X-X" then connecting again to the radially outer trajectory 47 of the third guide 46. Said radially inner trajectories 48 are superposed to the second guide 42, i.e. they define a part of the connecting portions 45 of the second guide 42. In the embodiment shown, there are eight radially inner trajectories 48. Said radially inner trajectories 48 are positioned upstream and downstream from each of the four yarn feeds and from each selecting actuator 24.

The base portions 21, 21', 35 of all the first and second selectors 11, 11', 27 are housed in a circular track 49 extending around the central axis "X-X" so as to slide therein. The circular track 49 is obtained in a lower portion of the guiding ring 38 and delimits one circular trajectory lying out of the radially outer trajectory 47 of the third guide 46, i.e. it surrounds it.

Each of the selecting actuators 24, known per se, is of magnetic or piezoelectric type and comprises a plurality of levers 50 arranged one above the other and movable together between a first position, e.g. a raised position, and a second position, e.g. a lowered position.

In the first position, the levers lie at a distance from the teeth 23, 23', 37 of the first and second selectors 11, 11', 27 so as not to interfere with said teeth 23, 23', 37 when the first and second selectors 11, 11', 27 are in

their rest positions. In particular, in the first position said teeth 23, 23', 37 are positioned between the levers 50.

In the second position, the levers 50 interfere with the teeth 23 of the second selectors 11 associated to the open-work sinkers 8, 9 and/or with the teeth 23' of the first selectors 11' associated to the knockover/terry sinkers 7 and/or with the teeth 37 of the first selectors 27 moving in front of the selecting actuator 24 when the crown 4 rotates with respect to the guiding ring 38 and around the central axis "X-X", so as to move the selectors 11, 11', 27 from the rest position to the operating position.

An electronic control unit, not shown, is operatively connected to the motor or motors causing the rotation of the needle-holding cylinder 2 and of the crown 4, to the selecting actuators 24 and to further actuating units, if any, of the machine. The electronic control unit is configured/programmed for commanding the motor or motors and the selecting actuators 24 and said further actuating units, if any, of the machine. In particular, the electronic control unit is configured/programmed for selectively moving the levers 50 of the selecting actuators 24 so as to move the first and/or second selectors 11, 11', 27 singularly from the rest position to the operating position.

In use and according to the method or methods of the present invention, in order to manufacture a plain knitted fabric (Figures 12 and 13), while the needle-holding cylinder 2 rotates with respect to the casing and the crown 4 rotates with respect to the guiding ring 38 and around the central axis "X-X", the levers of the selecting actuators 24 are kept in the first position in which they do not interfere with the teeth 23 of the first and second selectors 11, 11', 27, which are therefore all in their respective rest positions.

The butts 19, 19' of the first and second pushing units 10, 10', 26 go along the radially outer trajectory 47 of the third guide 46.

The butts 17 of the open-work sinkers 8, 9 of each respective assembly go along the radially outer trajectory 43 of the second guide 42, and therefore the protrusions 16 of the respective open-work sinkers 8, 9 remain in a position radially at a distance from the central axis "X-X", i.e. in a retracted or rest position in which they do not interact with the yarn making the stitch.

The butts 14 of the knockover/terry sinkers 7 and the butts 30 of the knockover/terry sinkers 25 therefore follow a part of the second trajectory 41 and a part of the first trajectory 40 of the first guide 39 causing a radial movement of the knockover/terry sinkers 7 and of the knockover/terry sinkers 25. The knockover/terry sinkers 7 and the knockover/terry sinkers 25 move forward and backward along respective radial directions so that the pins 13, 29 cooperate with the needles 3 for making the plain stitch (Figures 12 and 13). This operating mode can be implemented while the crown 4 rotates in clockwise direction, as in Figure 12, or in counterclockwise direction, as in Figure 13.

In order to make open work in the fabric (Figures 14 and 15), the control unit commands the selecting actuators 24 (by software control) so that they move the levers 50 from the first to the second position and then vice versa in programmed angular positions of the needle-holding cylinder 2 and of the crown 4, so as to catch specific selectors 11 of the open-work sinkers 8, 9 of specific assemblies.

The control unit further commands the devices controlling the needles 3 (by software control) so as to move said needles 3 and make them cooperate properly:

- with the knockover/terry sinkers 7 of the variant of the assembly (Figures 6 and 7) when forming plain fabric;
- with the open-work sinkers 8, 9 when forming open work; and
- with the knockover/terry sinkers 7 (Figure 4), with the spring 31, and the knockover/terry sinkers 25 (Figures 9 and 10), also with the spring 31, when forming terrycloth.

When forming open work, the second selector or selectors 11 thus caught are moved to the operating position, whereas the selectors of the open-work sinkers 8, 9 of the assemblies that are not selected, the first selectors 11' of all the knockover/terry sinkers 7 and the first selectors 27 of the knockover/terry sinkers 25 are not caught and remain in their rest position. Referring for the sake of simplicity to a single second selector 11, said second selector 11 pushes the respective two second pushing units 10 towards the central axis "X-X" so that the butts 19 of the pushing units 10 are deviated in the radially inner trajectory 48 of the third guide 46 placed immediately downwards of the selecting actuator 24 and follow it pushing in its turn the open-work sinkers 8, 9. The butts 17 of the right open-work sinker 8 and of the left open-work sinker 9 go along one of the connecting portions 45 of the second guide 42 and get into the radially inner trajectory 44 of the second guide 42 and follow it for a preset angle of rotation described by the crown 4 and by the needle-holding cylinder 2 in counterclockwise direction (Figure 14).

During this travel, which begins on the yarn feed preceding the one on which the stitch will be made, the right open-work sinker 8 and the left open-work sinker 9 are radially moved towards the central axis "X-X", whereas the needles 3 are kept in a lowered position and are then kept in such forward position.

Therefore, the second pushing units 10, by following the radially inner trajectory 48 of the third guide 46, get back to the radially outer trajectory 47 of said third guide 46 and push the second selector 11 back to the rest position. When the pair of open-work sinkers 8 and 9 reaches the feed in which the stitch is made, a knitted loop with elongated interstitches (open work) is formed, since the interstitches are loaded onto the protrusions 16 and not onto the pin 13 of the respective knockover/terry sinker 7.

During a following rotation in clockwise direction of the crown 4 and of the needle-holding cylinder 2 (Figure 15), the butts 17 of the open-work sinkers 8, 9 go along a portion of the radially inner trajectory 44 of the second guide 42 and are then deviated again on the radially outer trajectory 45 of the second guide 42 by a moving cam 51. During this travel, the open-work sinkers 8, 9 are radially moved away from the central axis "X-X" and are then kept in this position while the needles 3 are raised in a withdrawn position picking up the yarn of the interstitches on the protrusions 16.

In order to make terry stitches in the fabric (Figures 16), the control unit commands the selecting actuators 24 so that they move the levers 50 from the first to the second position and then vice versa in programmed angular positions of the needle-holding cylinder 2 and of the crown 4, so as to catch specific first selectors 11' of knockover/terry sinkers 7 of specific assemblies and/or specific first selectors 27 of specific assemblies. The second selectors of the open-work sinkers 8, 9, the first selectors 11' of the other knockover/terry sinkers 7 and the first selectors 27 of the other assemblies are not caught and remain in their rest position.

Referring for the sake of simplicity to a single first selector 27, said first selector 27 pushes the respective first pushing unit 26 towards the central axis "X-X" so that the butt 33 of the first pushing unit 26 is deviated in the radially inner trajectory 48 of the third guide 46 placed immediately downwards of the selecting actuator 24 and follow it pushing in its turn radially the respective knockover/terry sinker 25. This radial push is exerted while the knockover/terry sinker 25 is in one of the widest portions of the first guide 39 and moves the knockover/terry sinker 25 from the first trajectory 40 to the second trajectory 41 of the first guide 39, i.e. it anticipates the radial entry of the knockover/terry sinker 25 with respect to the cams only of the first guide 39 when forming plain stitch as described above. Thus the spring 31 of the knockover/terry sinker 25 cooperates with a pair of needles 3 (in a per se known manner, which is not further described here) so as to form a terry stitch. This operating mode can be implemented while the crown 4 rotates in clockwise direction, as in Figure 16, or in counterclockwise direction.

The present invention achieves important advantages both from a structural and a functional point of view.

As a matter of fact, by programming the control unit commanding the selecting actuators it is easily possible to make the desired first selectors and/or second selectors operating and thus manufacture complex knitted fabrics provided with areas with different features, such as e.g. open-work and/or terrycloth areas.

The simultaneous presence of knockover/terry sinkers, for making plain fabric or terry stitches, alternating with open-work sinkers, for making open work, allows to manufacture plain, terrycloth and open-work knitted fabric on the same machine with high flexibility and with the possibility of an alternating motion.

The machine according to the invention further allows to make open work and/or terry stitches and also other types of stitches and motifs with high speeds, thus dramatically reducing manufacturing times for even complex and sophisticated tubular knitted fabrics.

The control elements of said knockover/terry sinkers 25 and knockover/terry sinkers 7 placed beside the open-work sinkers 8, 9 are such as to allow said sinkers to be placed very close to one another and thus to obtain a compact machine. As a matter of fact, since the selectors 11, 11', 27 do not act directly upon the open-work sinkers 8, 9 and upon the knockover/terry sinkers 7, 25 but do so by deviating the trajectories of the first and second pushing units 10, 10', 26, which in their turn push the open-work sinkers 8, 9 and the knockover/terry sinkers 7, 25, the first and second selectors 11, 11', 27 and also the selecting actuators 24 can be kept at a radial distance from the needles 3 and from the area where the stitch is formed, and the open-work sinkers 8, 9 and the knockover/terry sinkers 7, 25 can be moved circumferentially close to one another.

Such a machine is further relatively simple from a structural point of view and thus of easy maintenance.

Moreover, since many elements are similar or identical (e.g. first and second pushing units, first and second selectors, knockover/terry sinkers, right and left open-work sinkers) their manufacturing costs can be kept low, which positively affects the manufacturing costs of the machine as a whole.

CLAIMS

1. A circular knitting machine, comprising:

- a needle-holding cylinder (2) having a plurality of longitudinal grooves arranged around a central axis (X-X) of the needle-holding cylinder (2);
- a plurality of needles (3), each being housed in a respective longitudinal groove;
- at least one yarn feed operatively associated to the needles (3);
- a crown (4) arranged around the needle-holding cylinder (2) and having a plurality of radial grooves ();
- at least one guiding ring (38) operatively associated to the crown (4), wherein the crown (4) is rotatable with respect to the guiding ring (38) and around the central axis (X-X);
- a plurality of sinkers of a first type (7, 25) housed in the radial grooves (5, 6) and radially movable in said radial grooves (5, 6); each sinker of the first type (7, 25) being configured for cooperating with the needles (3) so as to make a first type of stitch; each sinker of the first type (7, 25) comprising a butt (14, 30) engaged with a first guide (39) obtained in the guiding ring (38) and developing around the central axis (X-X); wherein the first guide (39) is configured for moving the sinker of the first type (7, 25) radially when the crown (4) rotates with respect to the guiding ring (38) and around the central axis (X-X);
- a plurality of sinkers of a second type (8, 9) housed in the radial grooves (6) and radially movable in said radial grooves (6); each sinker of the second type (8, 9) being configured for cooperating with the needles (3) so as to make a second type of stitch; each sinker of the second type (8, 9) comprising a butt (17) engaged with a second guide (42) obtained in the guiding ring (38) and developing around the central axis (X-X); wherein the second guide (42) is configured for moving the sinker of the second type (8, 9) radially when the crown (4) rotates with respect to the guiding ring (38) and around the central axis (X-X);
- a plurality of first selectors (11', 27) operatively coupled with the sinkers of the first type (7, 25), wherein each first selector (11', 27) is movable, preferably oscillating, in a radial plane between a rest position and an operating position, wherein in the operating position the first selector (11', 27) acts directly or indirectly upon a respective sinker of the first type (7, 25) so as to deviate the butt (14, 30) of the sinker of the first type (7, 25) along a trajectory of the first guide (39);
- a plurality of second selectors (11) operatively coupled with the sinkers of the second type (8, 9), wherein each second selector (11) is movable, preferably oscillating, in a radial plane between a rest position and an operating position, wherein in the operating position the second selector (11) acts directly or indirectly upon a respective sinker of the second type (8, 9) so as to deviate the butt (17) of the sinker of the second type (8, 9) along a trajectory of the second guide (42);
- at least one selecting actuator (24) laterally facing the crown (4), fixed with respect to the guiding ring (38), that can be engaged under control with the first and/or with the second selectors (11', 27, 11) and is configured for causing the first and/or the second selectors (11', 27, 11) to switch from the rest position to the operating position.

2. The machine according to claim 1, wherein the first selectors (11', 27) are identical or basically identical with the second selectors (11).

3. The machine according to claim 1 or 2, wherein the first selectors (11', 27) and the second selectors (11) are slidingly engaged in a circular track (49) obtained in the guiding ring (38) and extending around the central axis (X-X) so as to rotate together with the sinkers of the first type (7, 25) and with the sinkers of the second type (8, 9).

4. The machine according to claim 3, wherein each of the first selectors (11', 27) and each of the second selectors (11) has a base portion (21', 35, 21) with a rounded profile, configured for oscillating in the circular track (49) and around an axis tangent to a horizontal circumference with its center in the central axis (X-X), and an abutment portion (22', 36, 22) at a distance from the base portion (21', 35, 21).

5. The machine according to one of the claims 1 to 4, comprising a plurality of first pushing units (10', 26), each associated to a respective first selector (11', 27) and to at least one respective sinker of the first type (7, 25); wherein in the operating position the first selector (11', 27) rests against the first pushing unit (10', 26) and the first pushing unit (10', 26) is configured for pushing against said at least one sinker of the first type (7, 25).

6. The machine according to claim 5, wherein each of the first pushing units (10', 26) has a butt (19', 33) that is or can be engaged with a third guide (46) obtained in the guiding ring (38), extending around the central axis (X-X) and defining a plurality of trajectories.

7. The machine according to claim 5 or 7, wherein each first pushing unit (10', 26) is housed in one of the radial grooves (5, 6) together with the respective sinker of the first type (7, 25), and an abutment portion (22', 36) of the respective first selector (11', 27) faces a radially outer end of the first pushing unit (10', 26).

8. The machine according to one of the claims 1 to 7, comprising a plurality of second pushing units (10), each associated to a respective second selector (11) and to at least one respective sinker of the second type (8, 9); wherein in the operating position the second selector (11) rests against the second pushing unit (10) and the second pushing unit (10) is configured for pushing against said at least one sinker of the second type (8, 9).

9. The machine according to claim 8, wherein each of the second pushing units (10) has a butt (19) that is or can be engaged with a third guide (46) obtained in the guiding ring (38), extending around the central axis (X-X) and defining a plurality of trajectories.

10. The machine according to claim 8 or 9, wherein each second pushing unit (10) is housed in one of the radial grooves (6) together with the respective sinker of the second type (8, 9), and an abutment portion (22) of the respective second selector (11) faces a radially outer end of the second pushing unit (10).

11. The machine according to claim 8 when it depends on claim 5, wherein the first pushing units (11', 26) are identical or basically identical with the second pushing units (11).

12. The machine according to one of the claims 1 to 11, wherein the sinkers of the first type (7, 25) are alternated with the sinkers of the second type (8, 9) around the central axis (X-X).

13. The machine according to one of the claims 1 to 12, wherein the sinkers of the first type (25) are housed in respective first grooves (5) of said plurality of radial grooves, and the sinkers of the second type (8, 9) are housed in respective second grooves (6) of said plurality of radial grooves.

14. The machine according to one of the claims 1 to 13, wherein said at least one selecting actuator (24) comprises at least one selecting lever (50) movable between a first position, in which it lies at a distance from the first selectors (11', 27) and from the second selectors (11), and a second position, in which it interferes with the first selectors (11', 27) and/or with the second selectors (11) moving in front of the selecting actuator (24) when the crown (4) rotates with respect to the guiding ring (38) and around the central axis (X-X), so as to move the first selectors (11', 27) and/or the second selectors (11) from the rest position to the operating position.

15. The machine according to one of the claims 1 to 14, wherein the sinkers of the first type (7, 25) and the sinkers of the second type (8, 9) are chosen in the group comprising: knockover sinkers, each having a pin (13) configured for cooperating with the needles (3) so as to make a plain knitted fabric; terry sinkers, each having a spring (31) configured for cooperating with the needles (3) so as to make a terry stitch; open-work sinkers (8, 9), each having a laterally offset protrusion (16) configured for cooperating with the needles (3) so as to make an open work; knockover/terry sinkers (7, 25), each having a pin (13, 29) configured for cooperating with the needles (3) so as to make a plain knitted fabric, and a spring (31) placed above the pin (13, 29) and configured for cooperating with the needles (3) so as to make a terry stitch.

16. A method for manufacturing a knitted fabric using a machine according to one or more of the claims 1 to 15,

wherein the sinkers of the first type (7, 25) are knockover/terry sinkers, each having a pin (13, 29) configured for cooperating with the needles (3) so as to make a plain knitted fabric, and a spring (31) placed above the pin (13, 29) and configured for cooperating with the needles (3) so as to make a terry stitch;

wherein the sinkers of the second type (8, 9) are open-work sinkers, each having a laterally offset protrusion (16) configured for cooperating with the needles (3) so as to make an open work;

wherein the method comprises: keeping the first selectors (11', 27) and the second selectors (11) in the rest position, while the crown (4) rotates with respect to the guiding ring (38) and around the central axis (X-X), so as to move the knockover/terry sinkers (7, 25) along a second trajectory (41) and a first trajectory (40) of the first guide (39), so that the springs (13, 29), by cooperating with the needles (3), make a plain knitted fabric, and to keep the open-work sinkers (8, 9) along a radially outer trajectory (43) of the second guide (42) in a non-operating position;

wherein, while the first selectors (11', 27) and the second selectors (11) are in the rest position, the first pushing units (10', 26) and the second pushing units (10) move along a radially outer trajectory (47) of the third guide (46); wherein the first pushing units (10', 26) are radially at a distance from the respective knockover/terry sinkers (7, 25); wherein the second pushing units (11) are radially at a distance from the respective open-work knockover sinkers (8, 9).

17. A method for manufacturing a knitted fabric using a machine according to one or more of the claims 1 to 15,

wherein the sinkers of the first type (7, 25) are knockover/terry sinkers, each having a pin (13, 29) configured for cooperating with the needles (3) so as to make a plain knitted fabric, and a spring (31) placed above the pin (13, 29) and configured for cooperating with the needles (3) so as to make a terry stitch;

wherein the sinkers of the second type (8, 9) are open-work sinkers, each having a laterally offset protrusion (16) configured for cooperating with the needles (3) so as to make an open work;

wherein the method comprises: engaging said at least one selecting actuator (24) with at least one of the second selectors (11) so as to move said at least one second selector (11) in the operating position for at least one rotational portion of the crown (4) around the central axis (X-X), while the first selectors (11', 27) are kept in the rest position, so as to move said at least one open-work sinker (8, 9) associated to said at least one second selector (11) on a radially inner trajectory (44) of the second guide (42) and move the laterally offset protrusion (16) towards the central axis (X-X) for at least one rotational portion of the crown (4) around said central axis (X-X), so as to make, by cooperating with at least one needle (3), an open work in the knitted fabric;

wherein the second pushing unit (10) associated with said second selector (11) is pushed radially by the respective second selector (11) towards the central axis (X-X), gets on a radially inner trajectory (48) of the second guide (46) and pushes said at least one open-work sinker (8, 9) on the radially inner trajectory (48) of the second guide (46).

18. A method for manufacturing a knitted fabric using a machine according to one or more of the claims 1 to 17,

wherein the sinkers of the first type (7, 25) are knockover/terry sinkers, each having a pin (13, 29) configured for cooperating with the needles (3) so as to make a plain knitted fabric, and a spring (31) placed above the pin (13, 29) and configured for cooperating with the needles (3) so as to make a terry stitch;

wherein the sinkers of the second type (8, 9) are open-work sinkers, each having a laterally offset protrusion (16) configured for cooperating with the needles (3) so as to make an open work;

wherein the method comprises: engaging said at least one selecting actuator (24) with at least one of the first selectors (11', 27) so as to move said at least one first selector (11', 27) in the operating position for at least one rotational portion of the crown (4) around the central axis (X-X), wherein the second selectors (11) are kept in the rest position, so as to move said at least one knockover/terry sinker (7, 25) associated to said at least one first selector (11', 27) on the second trajectory (41) of the first guide (39), so that the spring (31) of the knockover/terry sinker (7, 25) makes a terry stitch by cooperating with at least one needle (3).

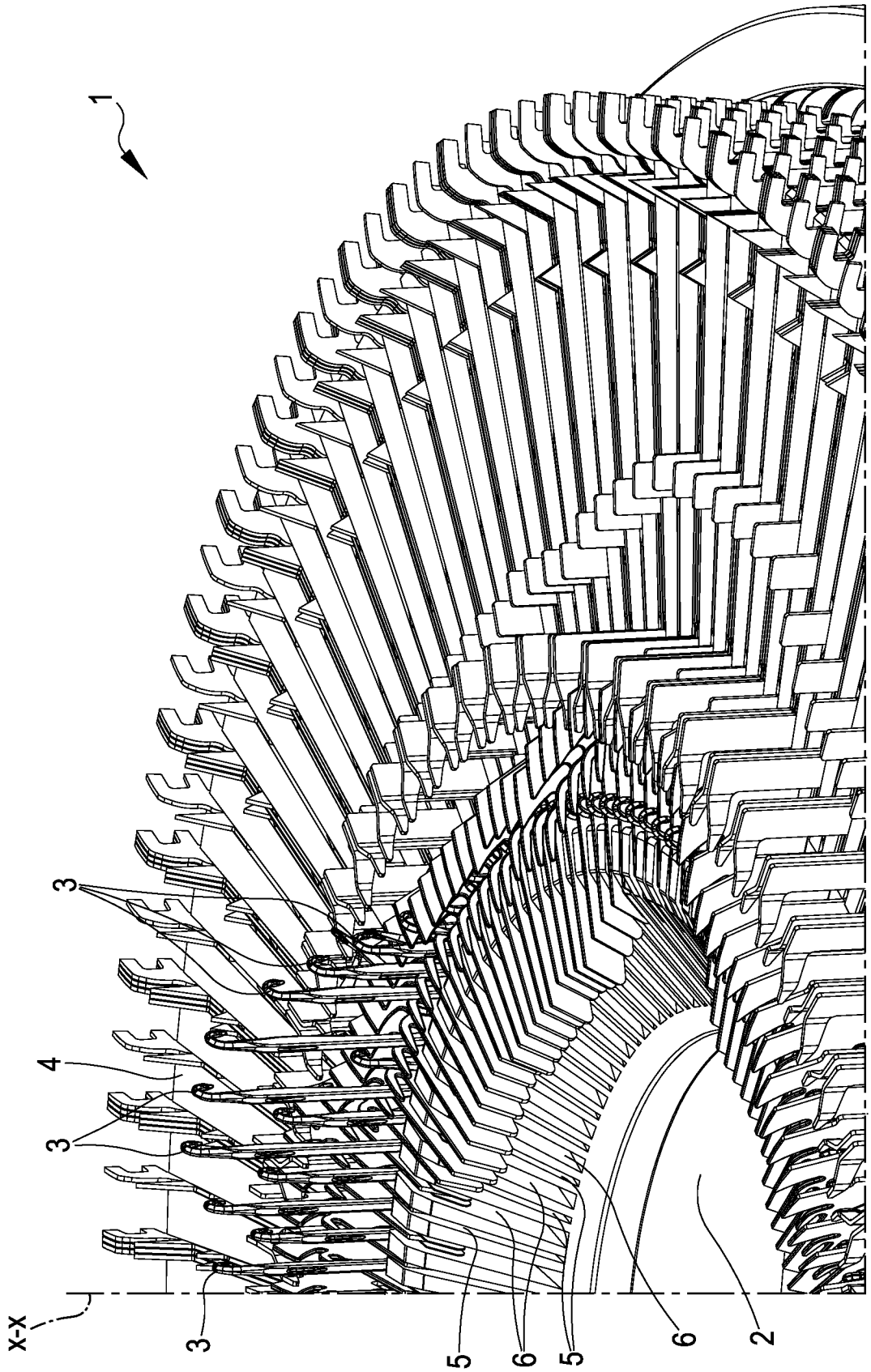

FIG.1

FIG.2

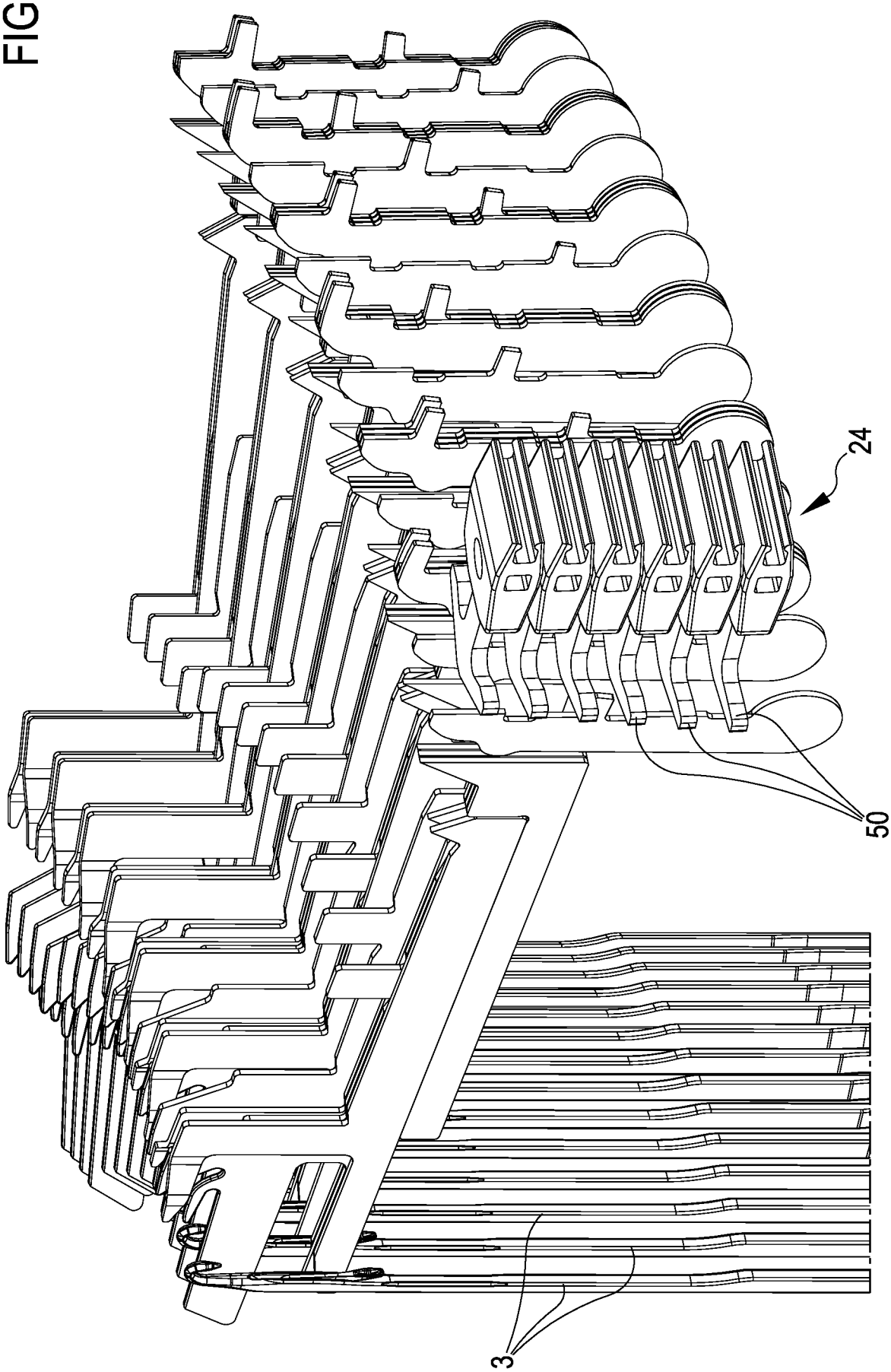

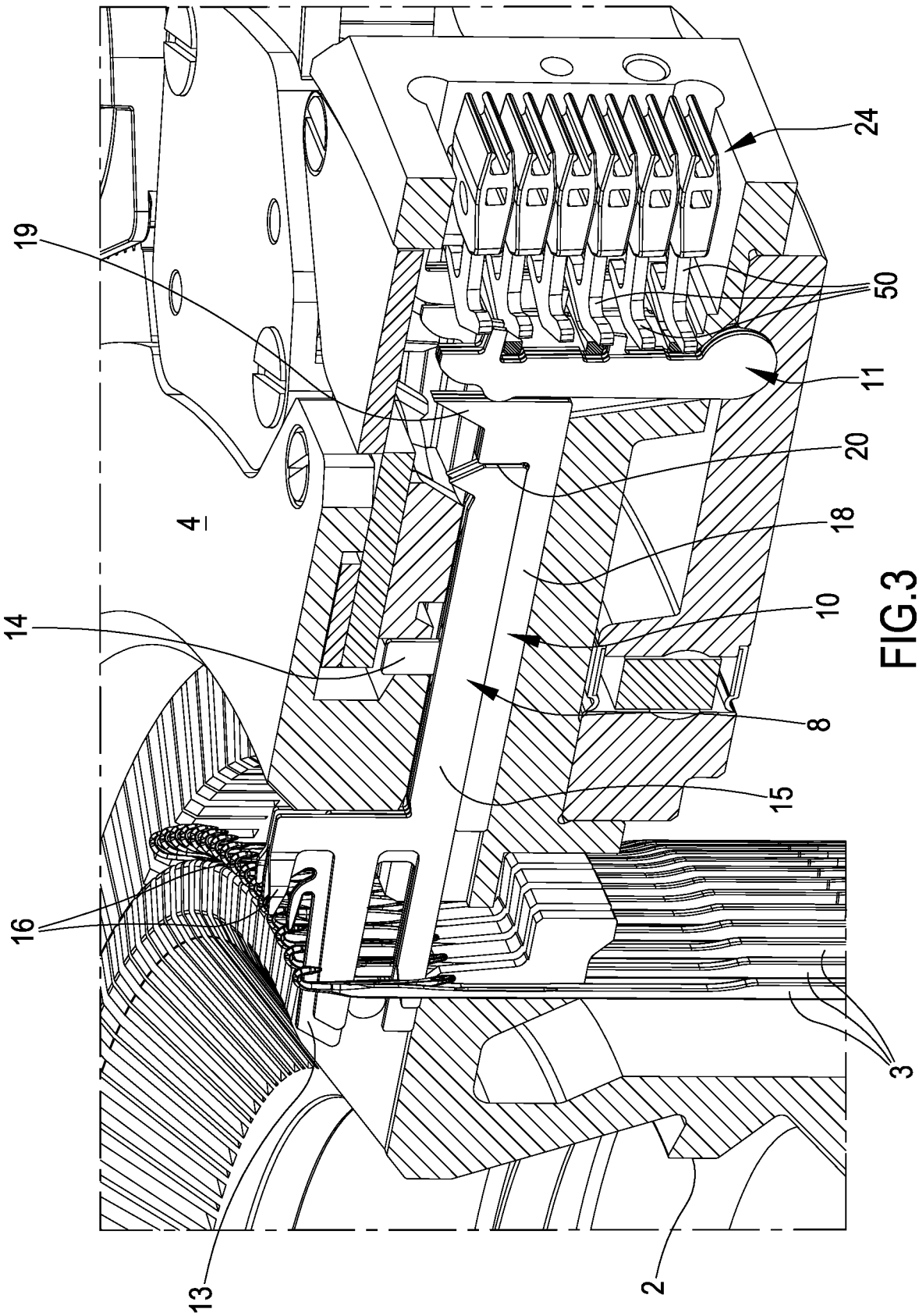

FIG.3

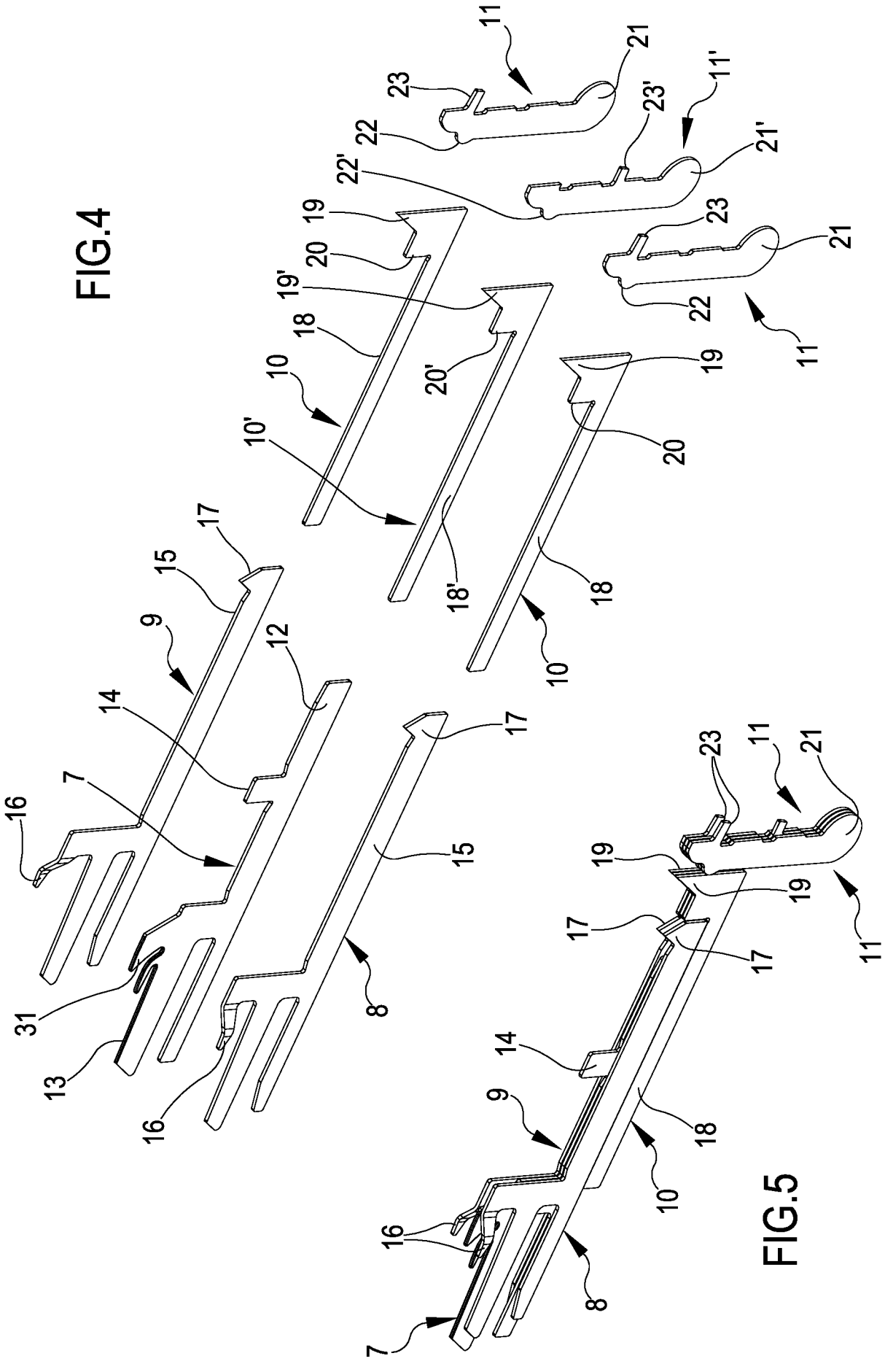

FIG.4

FIG.5

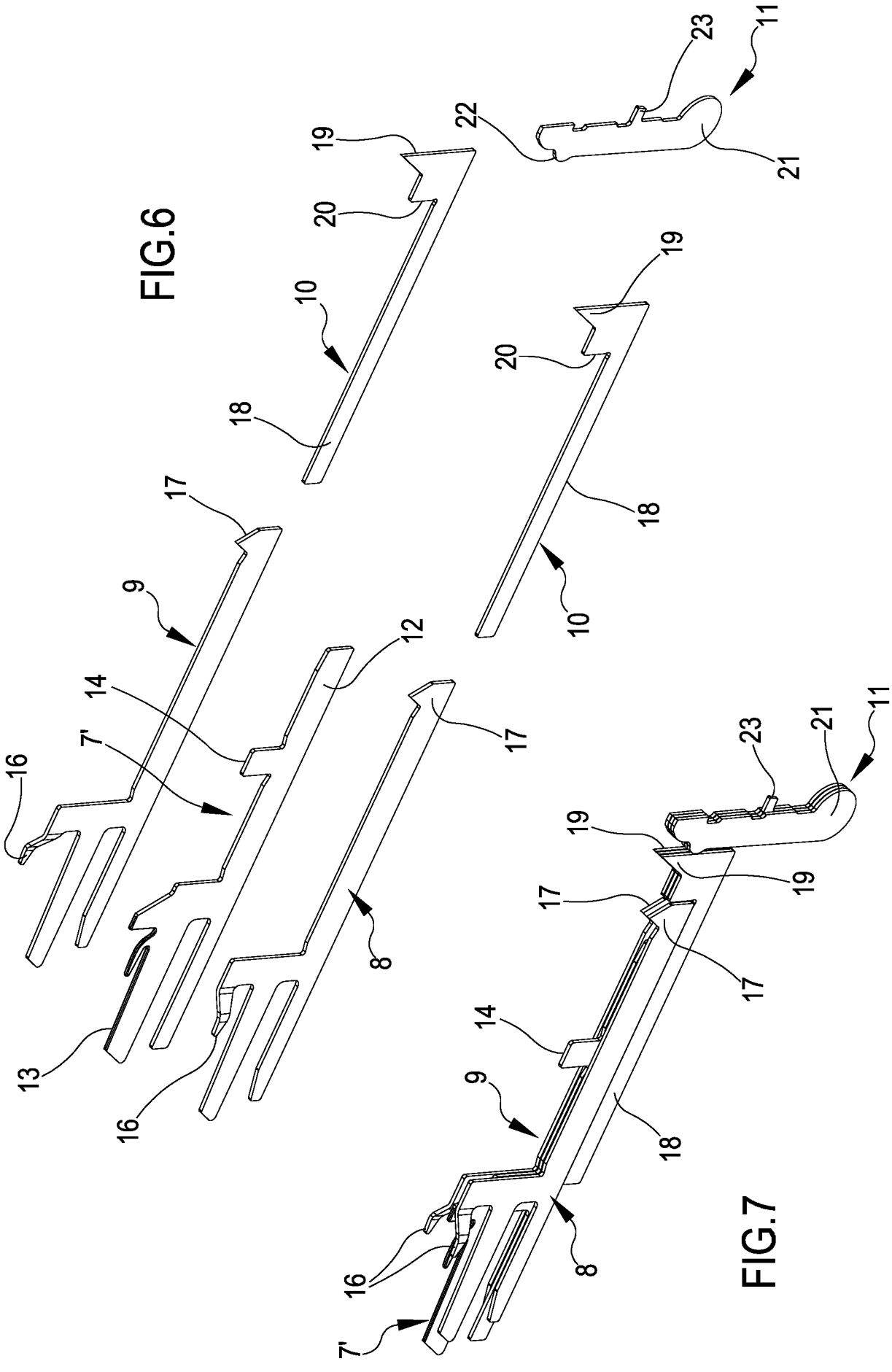
11
23
22
21
19
20
10
18
19
20
18
10
17
9
12
14
7'
16
17
8
13
16
23
21
11
19
19
17
17
14
9
18
8
16
7'

FIG.6

FIG.7

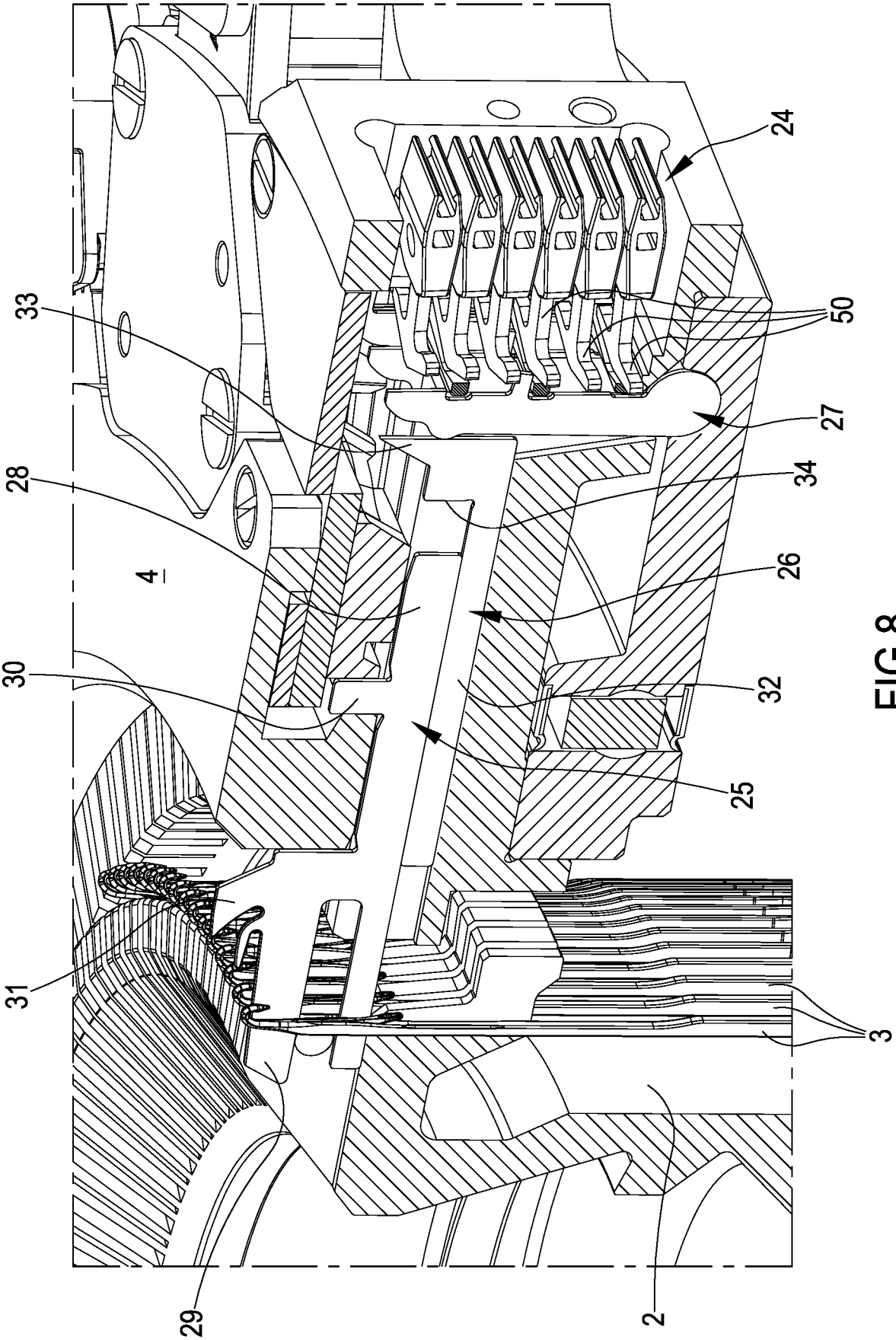

FIG.8

FIG.9

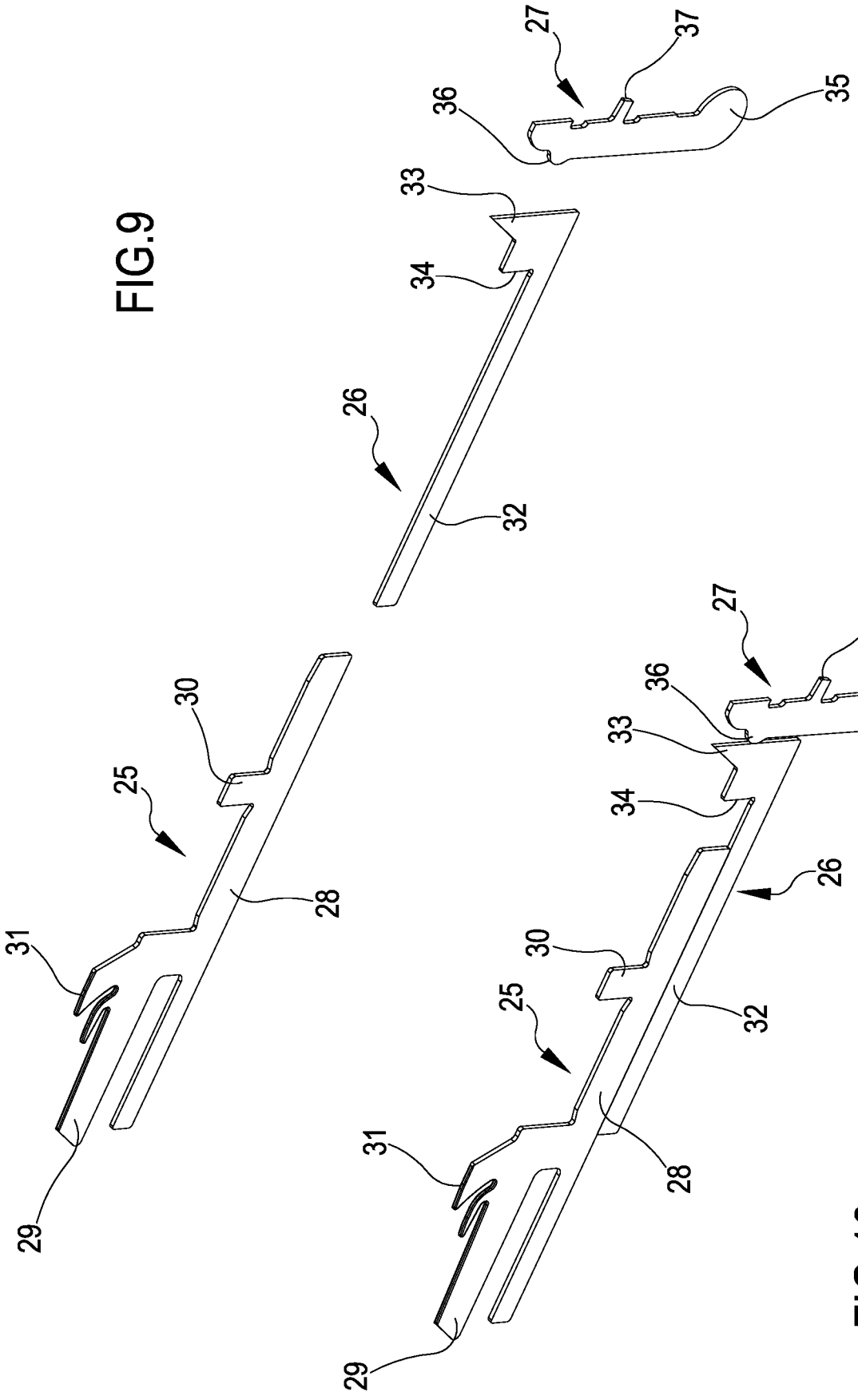

FIG.10

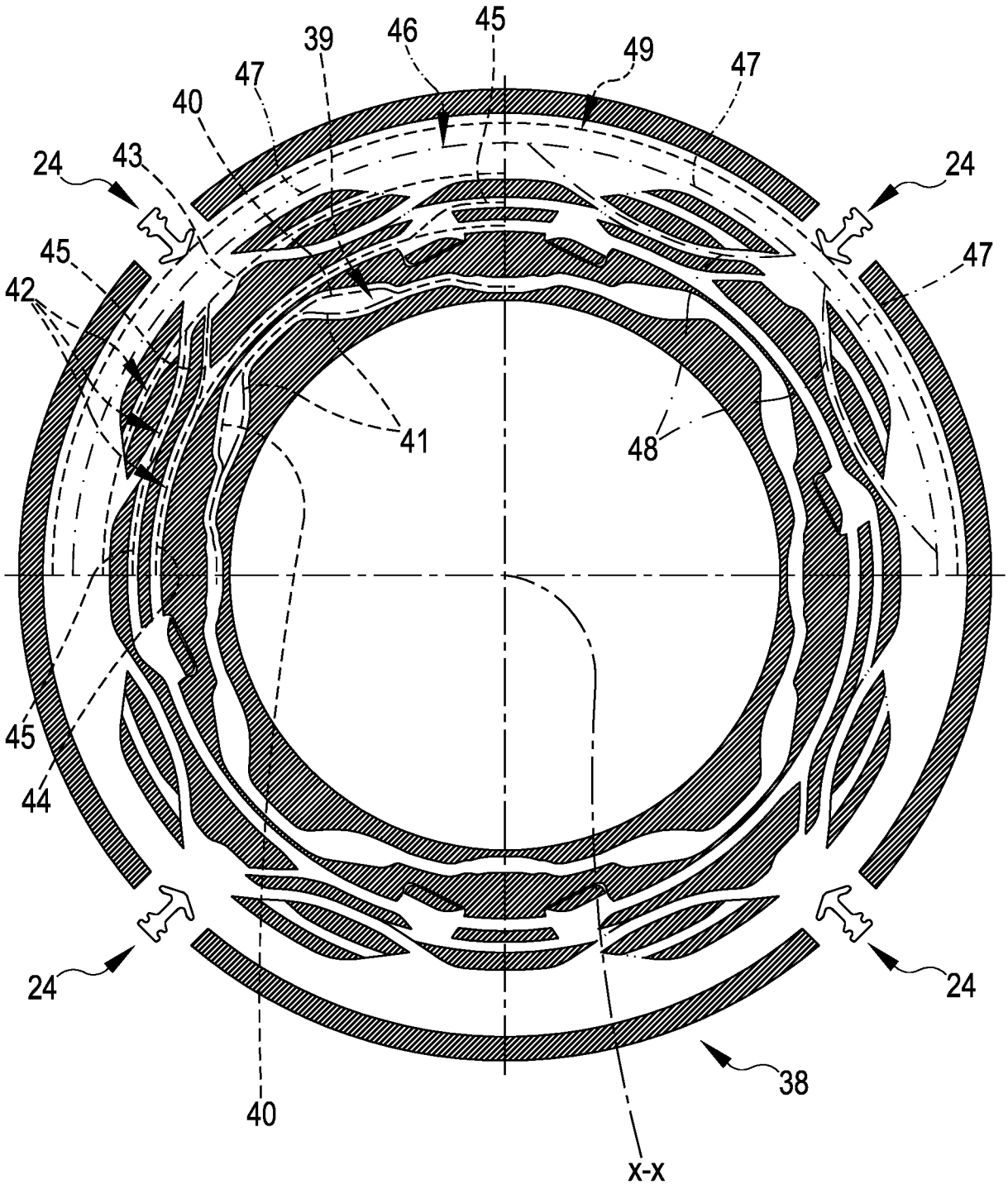

FIG.11

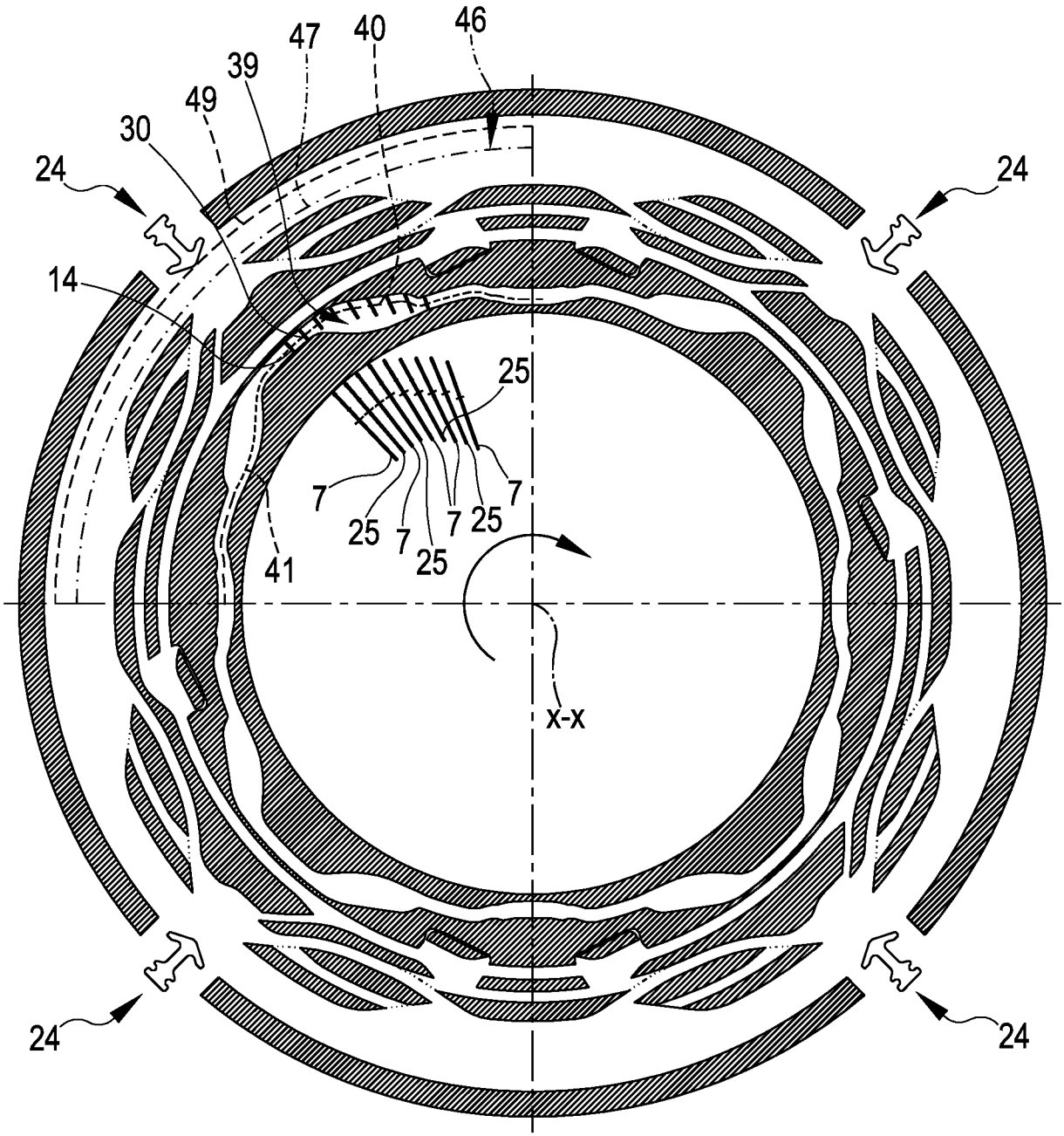

FIG.12

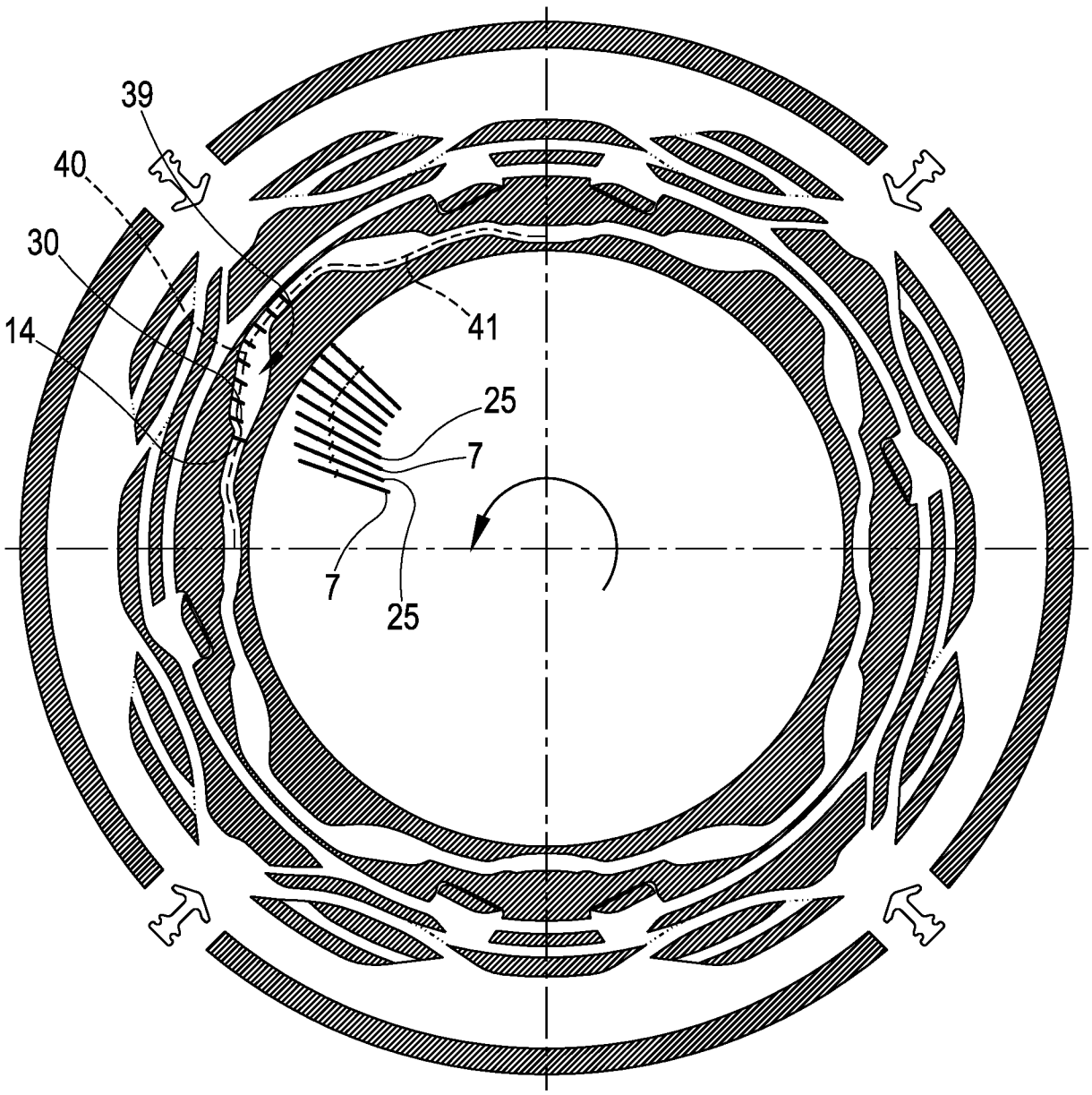

FIG.13

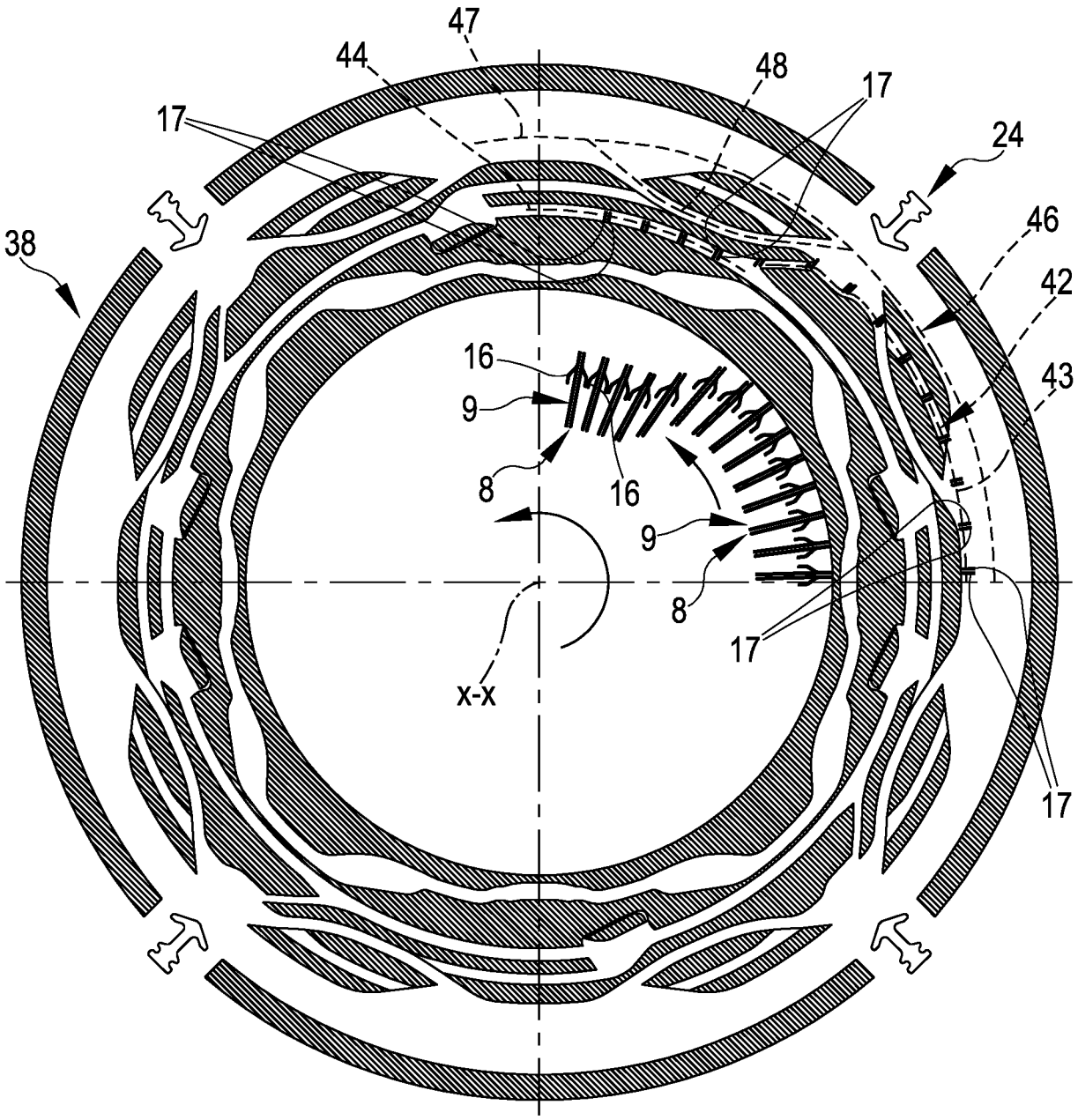

FIG.14

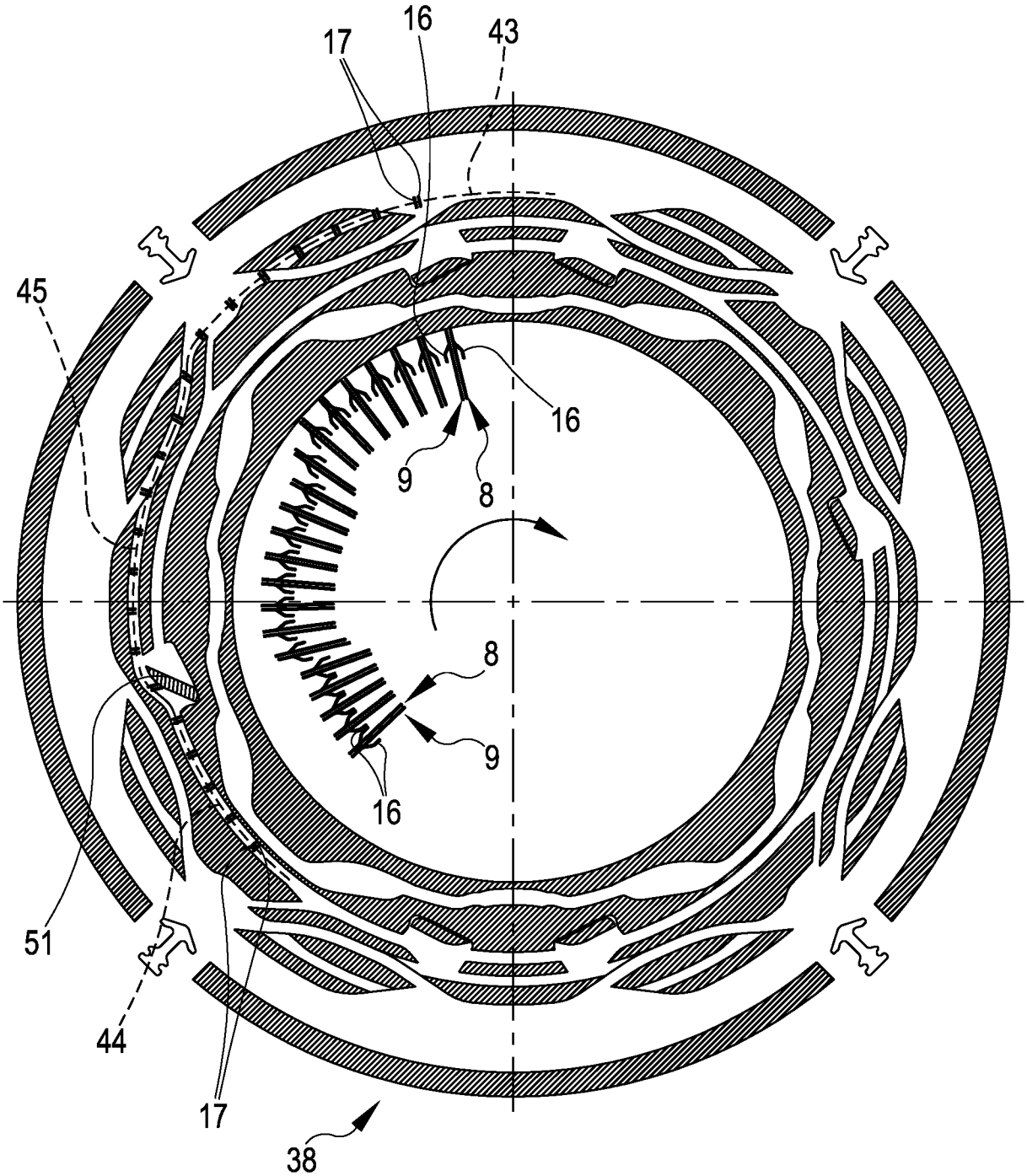

FIG.15

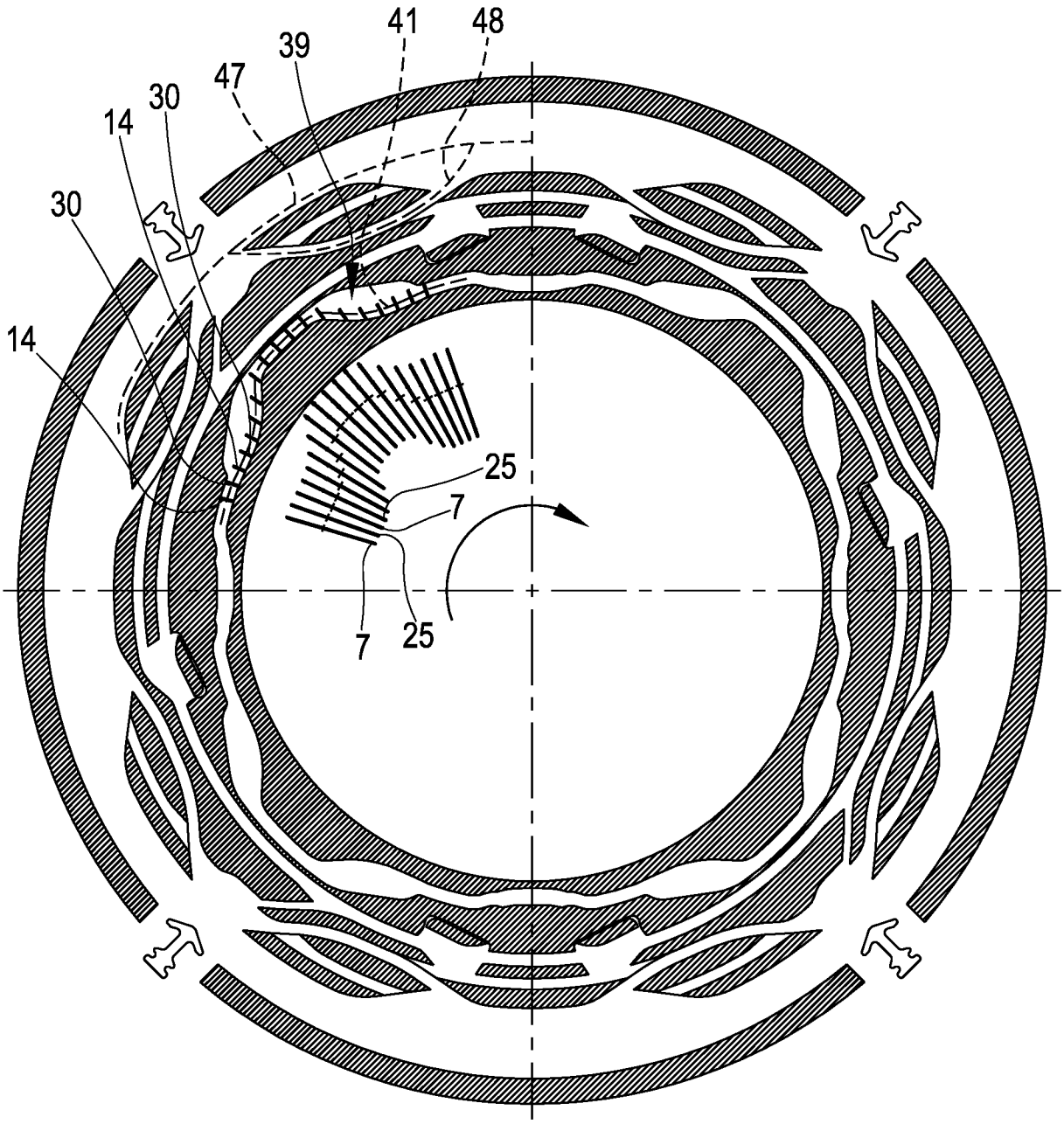

FIG.16

INTERNATIONAL SEARCH REPORT

International application No
PCT/IB2020/053442

A. CLASSIFICATION OF SUBJECT MATTER
INV. D04B9/38 D04B15/34 D04B15/68 D04B1/10 D04B1/02
D04B15/78
ADD.
According to International Patent Classification (IPC) or to both national classification and IPC

B. FIELDS SEARCHED

Minimum documentation searched (classification system followed by classification symbols)
D04B

Documentation searched other than minimum documentation to the extent that such documents are included in the fields searched

Electronic data base consulted during the international search (name of data base and, where practicable, search terms used)
EPO-Internal, WPI Data

C. DOCUMENTS CONSIDERED TO BE RELEVANT

Category*	Citation of document, with indication, where appropriate, of the relevant passages	Relevant to claim No.
X Y	EP 0 997 563 A1 (TEXTILES PLASTIQUES CHOMARAT [FR]) 3 May 2000 (2000-05-03) paragraphs [0015], [0022], [0023], [0026], [0027], [0028], [0031] - [0033]; figures 1-5	1-3,12, 14,15 4-11,13, 16-18
X Y	JP S49 102961 A (UNKNOWN) 28 September 1974 (1974-09-28) page 1, column 2 - page 2, column 1; figures 1-2-3A-C	1,2,12, 14,15 13
Y A	EP 1 524 348 A1 (LONATI SPA [IT]) 20 April 2005 (2005-04-20) cited in the application paragraphs [0016] - [0020], [0022] - [0026]; claims 1-12; figures 2-4	4-11, 16-18 3,14

-/--

[X] Further documents are listed in the continuation of Box C.

[X] See patent family annex.

* Special categories of cited documents :

"A" document defining the general state of the art which is not considered to be of particular relevance

"E" earlier application or patent but published on or after the international filing date

"L" document which may throw doubts on priority claim(s) or which is cited to establish the publication date of another citation or other special reason (as specified)

"O" document referring to an oral disclosure, use, exhibition or other means

"P" document published prior to the international filing date but later than the priority date claimed

"T" later document published after the international filing date or priority date and not in conflict with the application but cited to understand the principle or theory underlying the invention

"X" document of particular relevance; the claimed invention cannot be considered novel or cannot be considered to involve an inventive step when the document is taken alone

"Y" document of particular relevance; the claimed invention cannot be considered to involve an inventive step when the document is combined with one or more other such documents, such combination being obvious to a person skilled in the art

"&" document member of the same patent family

Date of the actual completion of the international search	Date of mailing of the international search report
31 July 2020	21/08/2020

Name and mailing address of the ISA/	Authorized officer
European Patent Office, P.B. 5818 Patentlaan 2 NL - 2280 HV Rijswijk Tel. (+31-70) 340-2040, Fax: (+31-70) 340-3016	Messai, Sonia

INTERNATIONAL SEARCH REPORT

International application No
PCT/IB2020/053442

C(Continuation). DOCUMENTS CONSIDERED TO BE RELEVANT

Category*	Citation of document, with indication, where appropriate, of the relevant passages	Relevant to claim No.
Y	FR 1 427 471 A (VALENTINI FLAVIO; SPADA FAUSTO) 4 February 1966 (1966-02-04)	13
A	page 1, column 2; figures 1-2	15-18

Y	WO 2010/035164 A1 (RUMI S R L [IT]; RUMI GUERRINO [IT]) 1 April 2010 (2010-04-01) paragraph [0007]; figure 10	16-18

INTERNATIONAL SEARCH REPORT

Information on patent family members

International application No
PCT/IB2020/053442

Patent document cited in search report	Publication date	Patent family member(s)	Publication date
EP 0997563 A1	03-05-2000	AT 245215 T	15-08-2003
		DE 69909573 T2	29-07-2004
		EP 0997563 A1	03-05-2000
		ES 2203040 T3	01-04-2004
		FR 2785300 A1	05-05-2000
JP S49102961 A	28-09-1974	JP S5413542 B2	31-05-1979
		JP S49102961 A	28-09-1974
EP 1524348 A1	20-04-2005	EP 1524348 A1	20-04-2005
		JP 4628063 B2	09-02-2011
		JP 2005120567 A	12-05-2005
		US 2005081569 A1	21-04-2005
FR 1427471 A	04-02-1966	NONE	
WO 2010035164 A1	01-04-2010	CN 102203335 A	28-09-2011
		EP 2337885 A1	29-06-2011
		IT 1391070 B1	18-11-2011
		WO 2010035164 A1	01-04-2010