H. H. CARPENTER.

REFRIGERATING APPARATUS.

APPLICATION FILED AUG. 31, 1915.

1,212,127.

Patented Jan. 9, 1917.

3 SHEETS—SHEET 1.

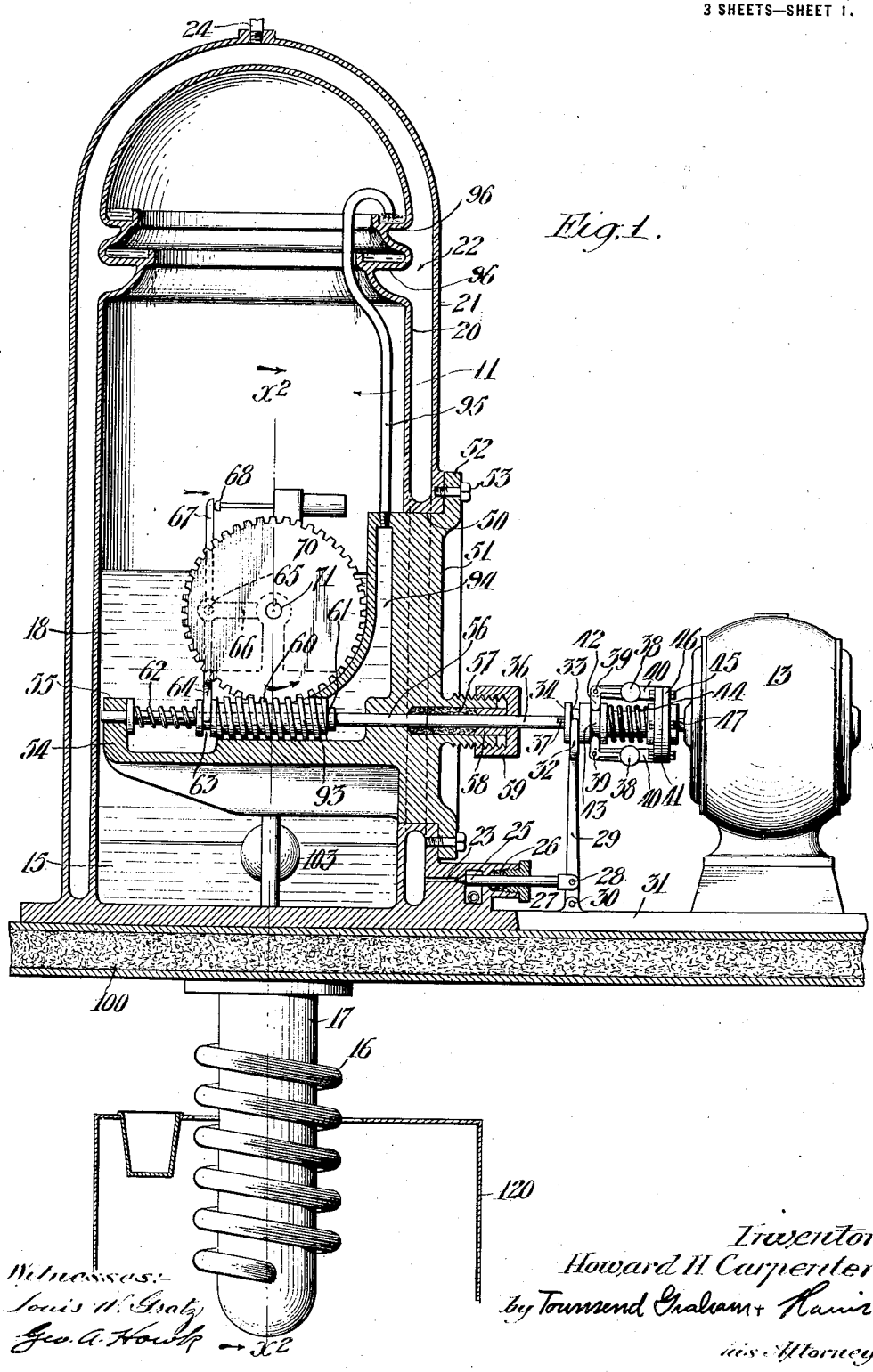

Fig. 1.

Witnesses:-
Louis W. Gratz
Geo. A. Hoult

Inventor
Howard H Carpenter
by Townsend Graham & Kain
his Attorneys

H. H. CARPENTER.

REFRIGERATING APPARATUS.

APPLICATION FILED AUG. 31, 1915.

1,212,127.

Patented Jan. 9, 1917.

3 SHEETS—SHEET 2.

Fig. 2.

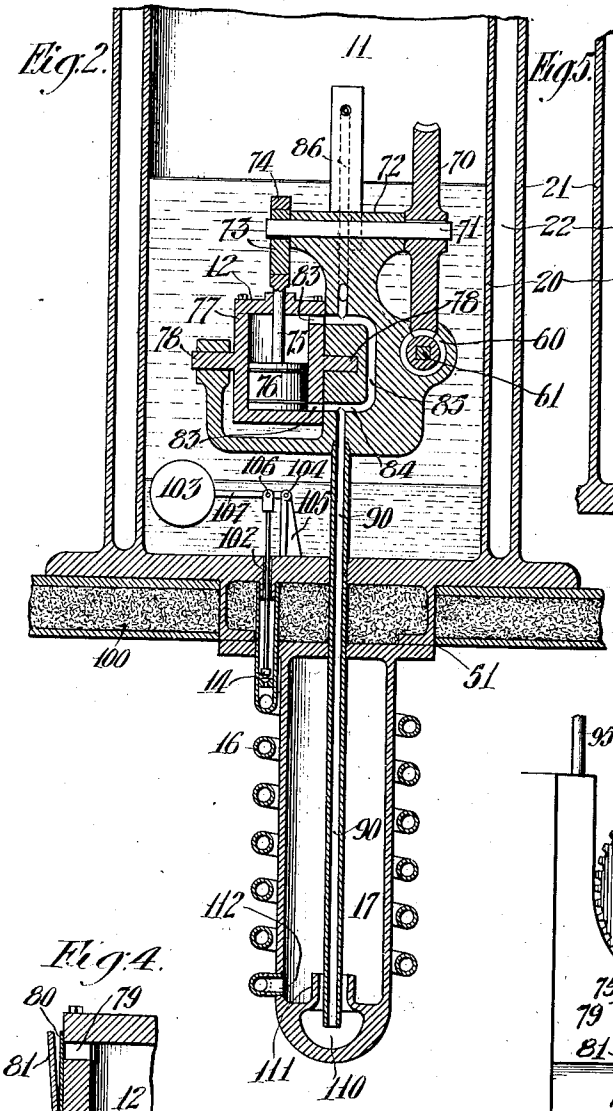

Fig. 5.

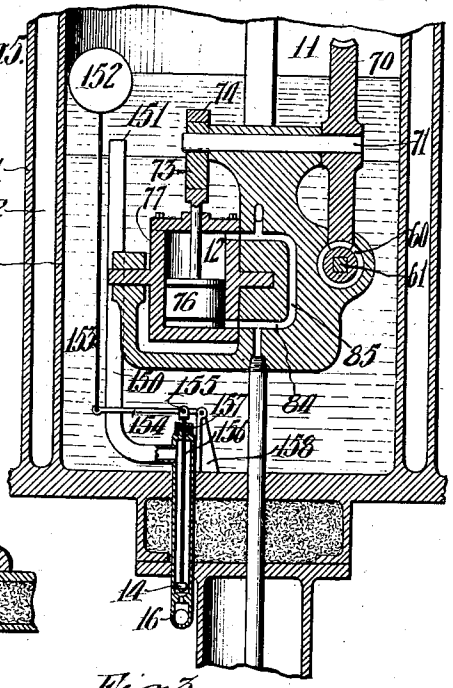

Fig. 3.

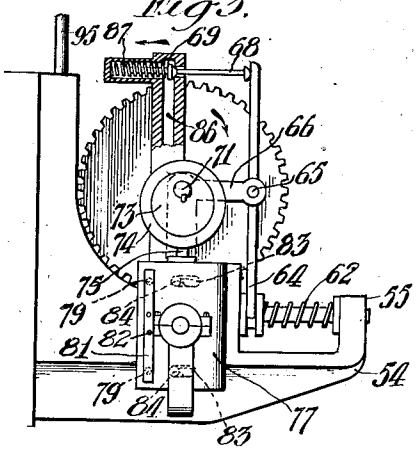

Fig. 4.

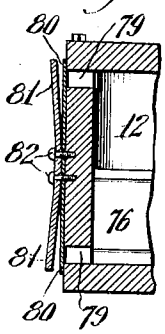

Witnesses:—
Louis W. Gratz.
Geo. T. Hook.

Inventor.
Howard H. Carpenter
by Townsend Graham & Davis
his Attorneys

H. H. CARPENTER.

REFRIGERATING APPARATUS.

APPLICATION FILED AUG. 31, 1915.

1,212,127.

Patented Jan. 9, 1917.

3 SHEETS—SHEET 3.

Fig. 7.

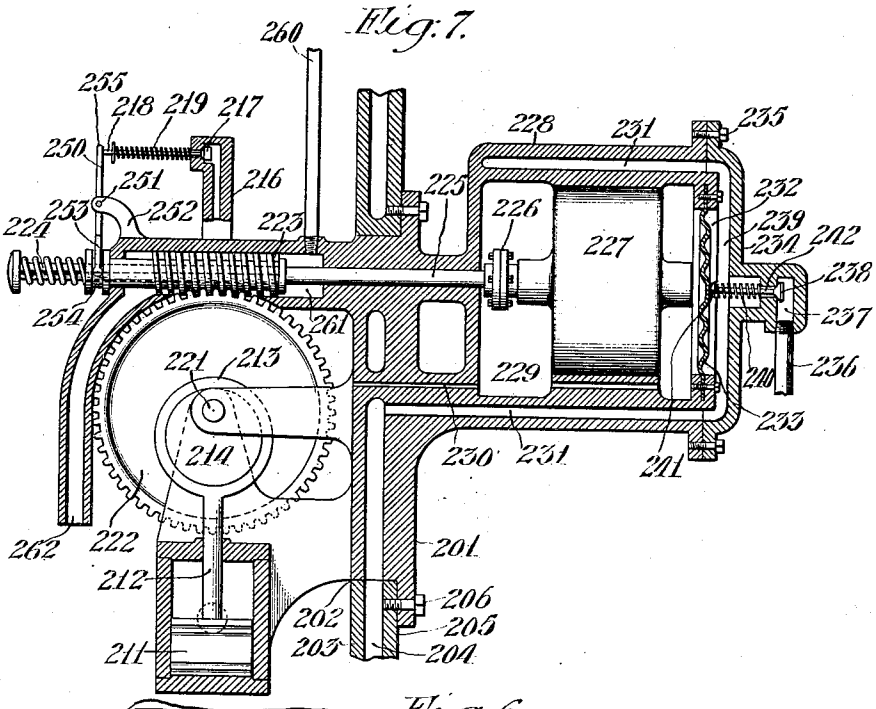

Fig. 6.

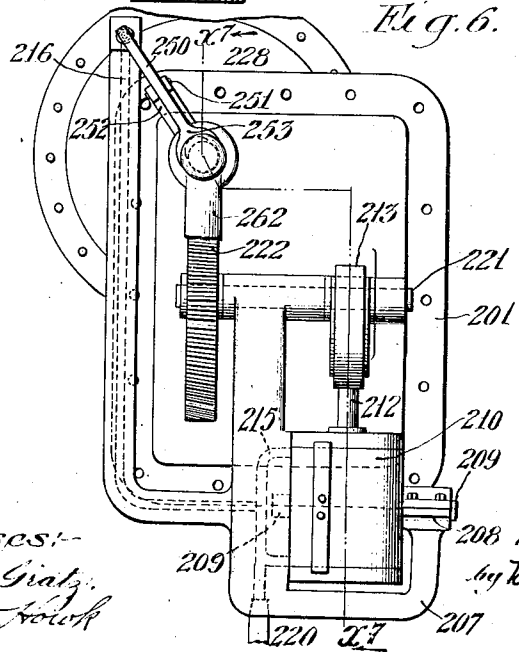

Witnesses:—
Louis W. Glatz.
Geo. A. Wolff

Inventor
Howard H. Carpenter
by Townsend Graham & Rains
his Attorneys

UNITED STATES PATENT OFFICE.

HOWARD H. CARPENTER, OF ALTADENA, CALIFORNIA.

REFRIGERATING APPARATUS.

1,212,127. Specification of Letters Patent. Patented Jan. 9, 1917.

Application filed August 31, 1915. Serial No. 48,359.

To all whom it may concern:

Be it known that I, HOWARD H. CARPENTER, a citizen of the United States, residing at Altadena, in the county of Los Angeles and State of California, have invented a new and useful Refrigerating Apparatus, of which the following is a specification.

My invention relates to refrigerating apparatus in which a refrigerant is compressed by a pump and condensed in a condensing chamber.

The first object of the invention is to provide an expansion valve located in the expansion chamber, this valve being operated by the refrigerant level in the condensing chamber. By locating this valve in or very close to the expanding chamber, no expansion of the refrigerant takes place until it reaches the expanding chamber, and there is consequently no loss due to long pipes from the expansion valve to the expanding chamber.

The second object of the invention is to provide a small self contained refrigerating apparatus which may be mounted on the top of an ordinary ice refrigerator, the refrigerating coil of the apparatus extending downwardly into the ice compartment of the refrigerator.

A third object is to provide a refrigerating apparatus in which the working parts operate in a bath of oil, this oil bath being preferably above the refrigerating liquid.

A fourth object is to provide special means for cooling the oil so that it will assist in cooling and condensing the refrigerant.

A fifth object is to provide special means for collecting any oil which may pass into the refrigerating coil or cylinder, and for returning this oil to the condensing chamber.

A sixth object is to provide special means for turning on and shutting off the flow of cooling water whenever the refrigerating apparatus starts or stops.

A seventh object is to provide means for preventing the driving motor from becoming excessively overloaded.

An eighth object is to provide an alternate form of the invention in which the driving motor is incased in a gas tight compartment and water cooled.

Further objects and advantages will be made evident hereinafter.

In the drawings which are for illustrative purposes only: Figure 1 is an elevation of the refrigerating apparatus as applied to an ordinary ice refrigerator, a portion of the apparatus and the refrigerator being shown in section to better illustrate the internal structure. In this form the refrigerant used is heavier than the lubricating oil employed. Fig. 2 is a section on the plane represented by the line x^2—x^2 of Fig. 1 looking in the direction of the arrows. Fig. 3 is an elevation of a portion, a part thereof being shown in section to better illustrate the internal structure. Fig. 4 is a sectional detail of the outlet valves for the pump. Fig. 5 is a similar section to Fig. 2 of an alternate form of construction. In this form a light refrigerant floating above the oil is used. Fig. 6 shows an elevation of an alternate form of my invention using a heavy refrigerant and a water cooled motor. Fig. 7 shows a section on a folded plane represented by the line x^7—x^7 of Fig. 6 looking in the direction of the arrows.

Broadly considered the apparatus illustrated in Figs. 1, 2, 3, and 4, consists of a condensing chamber 11 in which is placed a compression pump 12 driven through suitable gearing by a motor 13. An automatic valve 14 is provided through which the refrigerant 15 may be passed into a refrigerating coil 16, and from thence into a refrigerating cylinder 17, the coil 16 and cylinder 17 projecting into the space to be cooled. A body of oil 18 is placed in the condensing chamber 11, this oil in the form of the invention illustrated in Figs. 1, 2, 3, 4, 6, and 7, being lighter than the refrigerant and floating in the condensing chamber 11 above the refrigerant. Considered more in detail the condensing chamber 11 is formed of two walls, an inner wall 20 and an outer wall 21, separated by a water cooling space 22. Water is admitted to the space 22 through an opening 23, and discharged from the space 22 by a water outlet pipe 24. The opening 23 may be closed by a needle valve 25, the needle valve 25 having a stem surrounded by packing 26 compressed by a follower 27. The outer end of the stem of the valve 25 is connected to a pin 28 which is pivoted on a lever 29, the lever 29 being pivoted on a pin 30 secured in a projection on a base 31. The base 31 is preferably cast integral with the condensing chamber 11.

The upper end of the lever 29 is forked at 32, and engages a groove 33 formed in a casting 34, the casting 34 sliding freely on a worm shaft 36, but being prevented from turning thereon by a key 37. A pair of governor balls 38 are pivoted on pins 39, carried on arms 40 of a coupling member 41. The balls 38 have projections 42 which engage a groove 43 formed in the casting 34. A compression spring 44 acts on one end of the casting 34, and on the other end against the coupling member 41 tending to force the casting 34 to the left as shown in Fig. 1. The coupling member 41 is rigidly keyed to the shaft, and is connected by means of bolts 45 with a similar coupling member 46 secured on the driving shaft 47 of the motor 13. The arrangement of the governor balls 38, the lever 29, the valve 25, and their connected parts, is such that when the motor is at rest the spring 44 causes the valve 25 to close the opening 23 thereby preventing water from flowing through the circulating space 22. Whenever the motor is started up the governor balls 38 are forced outwardly by centrifugal force opening the valve 25 against the compression spring 44 and allowing water to flow through the opening 23, through the circulating space 22, and out through the pipe 24, during the time the motor is in operation, thus cooling the inner wall 20 of the condensing chamber 11. The motor is driven from any convenient source of electric power, and may be started and stopped as desired by an operator, or may be automatically controlled by means of a thermostat, or by any one of the various convenient means well known in the refrigerating art.

An opening 50 is provided in the side of the refrigerating chamber 11, and a pump support casting 51 is machined to fit tightly therein having a machined flange 52 which is clamped by means of bolts 53 against the side of the refrigerating chamber 11 as shown in Fig. 1 making a gas tight joint therewith. The support 51 is provided with an arm 54 having a bearing 55 formed thereon in which the worm shaft 36 is free to turn. A bearing 56 is formed in the casting 51, the worm shaft 36 also turning freely therein. Packing 57 is compressed by a follower 58, and by a nut 59 surrounding the shaft 36 where it emerges from the condensing chamber 11, making a gas tight joint therewith. A worm 60 is mounted on a square shoulder 61 on the shaft 36 being free to slide axially of the shaft under the influence of a compression spring 62 which acts against a washer secured on the shaft 36 adjacent to the bearing 55. A groove 63 is cut in one end of the worm 60 being engaged by a forked lever 64, pivoted at 65 on an extension 66 of the support 51, this lever having an extension 67 which engages the end of a pin 68 operating a valve 69 as will hereinafter be explained.

The worm 60 drives a worm gear 70 in the direction of the arrows shown in the drawings, and the tension of the spring 62 is such that whenever the pressure necessary to turn the worm gear 70 exceeds a certain amount the worm 60 slides on the shaft 36, pressing the pin 68 in the direction of the arrows shown in the figures. The gear 70 is rigidly keyed to a shaft 71, this shaft 71 extending through a bearing 72 formed on the support 51 and having an eccentric 73 keyed to the opposite end thereof. Mounted on the eccentric 73 is an eccentric ring 74 to which is secured the piston rod 75, this piston rod being also secured at its lower end to a piston 76. The piston 76 slides in a cylinder 77 which is mounted on trunnions 78 turning in the support 51. Outlet openings 79 are formed at either end of the cylinder, these outlet openings being closed by a spring valve 80 which is protected by a guard 81 secured by means of screws 82 to the side of the cylinder 77. The valves 80 permit fluid to be forced from either end of the cylinder, but resists any tendency to draw fluid in. Cylindrical ports 83 are formed in the cylinder 77, these ports communicating with elongated openings 84 which are connected by means of a passage 85 with a relief channel 86 in the upper end of which the valve 69 is placed. The valve 69 is normally held closed by means of a compression spring 87 and is opened in case of excessive load by means of the lever 67 which presses on the pin 68 as previously described. The openings 84 are also in open communication with an intake pipe 90, this intake pipe extending through the bottom of the casting 51 into the expansion chamber 17.

The worm 60 fits tightly in an opening 93 formed in the end of an oil compression chamber 94. The action of the worm is such that oil is forced into the chamber 94, and from thence upwardly through a pipe 95, discharging into a series of shelves 96 formed in the inner wall 20 of the chamber 11, the oil being cooled in the shelves 96, and by flowing over the inner wall 20 of the chamber 11. There is thus a constant circulation of the oil 18 so that it is kept cool.

The expansion chamber 17 is preferably formed in the shape shown in Figs. 1 and 2, and is bolted or welded to the bottom of the casting 51 and is inserted through the upper wall 100 of the refrigerator into the space to be cooled. This space may be a portion of an ordinary household ice refrigerator, or it may be an especially devised refrigerating chamber. The refrigerating coil 16 encircles the chamber 17 and is connected at its upper end to the support 51 which has an

opening 102 extending therethrough so that the upper part of the coil 16 is in open communication with the interior of the expanding chamber 11. The valve 14 closes the communication between the expanding chamber 11 and the coil 16, this valve being opened by a float ball 103 pivoted on a pin 104, the pin 104 being carried by a standard 105, formed on, and extending up into, the expanding chamber 11. The stem of the valve 14 is secured to a pin 106 on a lever 107, forming a portion of the ball 103. The specific gravity of the ball 103 is such that it will float in the heavy refrigerant, but will not float in the lubricating oil which covers it. As a result the valve 14 is only open when there is a considerable accumulation of the refrigerant in the bottom of the chamber 11. When there is an accumulation of the refrigerant in the chamber 11 it is passed through the valve 14 into the coil 16, where it expands from a liquid to a gaseous state, absorbing as latent heat of evaporation considerable quantities of heat from the walls of the coil 16, and greatly lowering the temperature of the coil 16. The lower end of the coil 16 communicates with the lower portion of the chamber 17, and a further expansion takes place therein, so that the walls of the chamber 17 are cooled, the chamber 17 and the coil 16 acting as refrigerating members.

A cup 110 having a raised lip 111 is formed on the extreme bottom of the chamber 17, the coil 16 discharging into an annular space 112 surrounding the lip 111. The pump 12 draws liquid or gas from the bottom of the cup 110 through the pipe 90. The object of the lip 111 is to collect any liquid refrigerant which may come through the pipe coil 16, and to float off and discharge into the cup 110 any lubricating material which may come through. The lubricating material being lighter than the refrigerant, it is evident that it will overflow the lip 111 into the cup 110 being floated on the heavy refrigerant below it in the annular space 112. If desired the coil 16 and the expanding chamber 17 may be set into the top of a brine tank 120 as shown in Fig. 1.

The method of operation of the above described apparatus is as follows: Electric current being supplied by the motor 13, either by the operation of a manual switch, or automatic means, the motor is rotated, rotating the worm shaft 36 and causing the governor balls 38 to open the valve 25 so that cooling water is circulated through the space 22 discharging through the pipe 24. The inner wall 20 of the chamber 11 is therefore kept cooled by this circulating water. The rotation of the worm 60 forces oil into the chamber 94, and upwardly therefrom through the pipe 95 on to the ledges 96, and over the inner wall 20 of the chamber 11 thereby cooling the oil. The gear 70 being rotated, rotates the eccentric 73, and reciprocates the piston 76, at the same time oscillating the cylinder 77 in the trunnions 78. The arrangement of the valves 83 and 84 are such that each end of the cylinder is connected to the ports 84 on the suction stroke, and disconnected therefrom on the compression stroke. The piston 76 therefore tends to cause a partial vacuum on the pipe 90, and to compress the refrigerant drawn therethrough, the compressed refrigerant being discharged through the opening 90 under the surface of the oil 18. The oil 18 being kept cold tends to cool the compressed refrigerant and to reduce it to a liquid form, the refrigerant also condenses into liquid form on the cold inner surfaces of the wall 20. The refrigerant collects in the bottom of the chamber 11 as shown at 15. Whenever there is a sufficient accumulation of the liquid 15 in the bottom of the chamber 11 the ball 103 lifts the valve 14, and refrigerant is discharged into and expanded in the coil 16 and the chamber 17. Should the pressure in the chamber 11 rise too high the increased pressure on the worm 60 slides the worm 60 on the shaft 36 against the spring 62 opening the valve 69 and allowing the pressure in the chamber 11 to discharge directly into the chamber 17, thus equalizing the pressure on either side of the pump so that the overload is relieved. Whenever the motor 13 is stopped the governor balls 38 close the valves 26 and shut off a further flow of cooling water through the space 22.

In some cases it is desired to use a refrigerant which is heavier than oil, and in this case the alternate form of construction illustrated in Fig. 5 is used. In this form of construction the same parts are used as in that previously described, except that the upper end of the coil 16 is provided with a pipe 150 which extends to a point 151 well above the surface of the oil and into the body of the lighter refrigerant. The float ball 152 is placed above the end 151 of the pipe 150, being connected through a rod 153 with the end of a lever 154 to which is pivoted at 155 the end of a valve stem 156, which operates the valve 14. A suitable stuffing box 157 is provided around the valve stem 156, and the lever 154 is pivoted on a projection 158 corresponding to the projection 105 previously described.

The method of operation is exactly similar to that previously described in the case of the other figures, except that the accumulation of the refrigerant takes place above the oil, this refrigerant being discharged through the valve 14 whenever a sufficient amount accumulates to lift the float 152.

In the form of my invention illustrated in Figs. 1, 2, 3, 4, and 5, a motor is used which is located outside the condensing chamber,

this motor driving the pump through a worm shaft 36 which is surrounded by a stuffing box where it leaves the condensing chamber. If the pressures in the condensing chamber are considerable this stuffing box must be made very tight or some oil or refrigerant will be forced outwardly therethrough. As most available refrigerants have a disagreeable odor and some of them are poisonous any such leakage is a serious matter. If the stuffing box is made fairly tight it will cause some friction on the worm shaft 36 thereby increasing the size of the motor. When the refrigerating apparatus is large the stuffing box is not objectionable, but on very small apparatus such as is used in small refrigerators the friction in this stuffing box becomes a considerable item.

To do away with the friction on the stuffing box, and to make an absolutely sealed apparatus in which there is no likelihood of lubricant or refrigerant escaping, I use the form of pump and driving mechanism illustrated in Figs. 6 and 7. In the form of the invention illustrated in these figures a support casting 201 is provided, this casting being machined to fit into an opening 202 formed in the walls 203 of a condensing chamber similar to the chamber 11 already described. A cooling space 204 is provided through which water or other cooling means is circulated through the walls of the condensing chamber. The support 201 is fastened to an outer wall 205 of the condensing chamber by means of bolts 206, or by any other convenient means. Formed on the support 201 is a bracket 207 in which bearings 208 are formed. Trunnions 209 formed on a cylinder 210 turn in the bearings 208. A valve similar to the valves illustrated in Fig. 4 is secured on the side of the cylinder providing a free outlet for any refrigerant which is condensed therein. A piston 211 is actuated by a piston rod 212 which is secured to a ring 213 surrounding an eccentric 214. Ports similar in form to 83 and 84 are formed in the cylinder and the support, these ports communicating with a relief opening 215 which extends up through a projection 216 formed on the support 201, this opening being closed at its upper end by a valve 217. The valve 217 has a valve stem 218 which is surrounded by a compression spring 219, the compression spring 219 being so arranged as to hold the valve 217 closed under normal conditions. An intake pipe 220 corresponding to the intake pipe 90 already described is connected to the opening 215. The eccentric 214 is rigidly connected to a gear shaft 221 to which is rigidly connected a worm gear 222, this worm gear being engaged and driven by a worm 223 which may slide on a square extension 224 of a worm shaft 225. The worm shaft 225 is connected by means of a coupling 226 with a shaft motor 227. The motor 227 is placed in an extension 228 formed on the support 201 in a motor chamber 229 which is formed therein. Suitable wiring not shown extends through the wall of the chamber 229 being tightly secured therein, this wiring supplying current to the motor 227. An oil outlet passage 230 connects the chamber 229 with the condensing chamber equivalent to the chamber 11 already described, so that any oil or refrigerant which may collect on the bottom of the chamber 229 can readily drain into the condensing chamber, and so that the pressure between the chamber 229 and the condensing chamber is always equal. A water passage 231 is formed in the walls of the extension 228. An opening 232 is formed in the end of the chamber 229, and an expansion diaphragm 233 is rigidly and tightly secured in the opening 232. A cover 234 is secured by means of bolts 235 on the end of the extension 228, and a water inlet pipe 236 is secured therein, this inlet pipe being connected to a small opening 237 which communicates through a valve 238 with a space 239 between the diaphragm 233 and the cover 234. The valve 238 is normally held closed by a compression spring 240, this compression spring acting on the end 241 of the valve stem 242 of the valve 238. The end 241 presses against the diaphragm 233 so that any expansion of the diaphragm 233 due to pressure in the chamber 229 will open the valve 238 and allow water to flow from the opening 237 to the space 239, and from thence through an opening 231 into the water space 204 surrounding the condensing chamber. The proportions of the valve 238 are made such that it is normally held closed by the spring 240 only being opened when considerable pressure builds up in the condensing chamber and in the chamber 229. There is therefore no flow of water through the pipe 236 until the pump has built up a considerable pressure in the condensing chamber.

A lever 250 is pivoted on a pin 251 secured on an extension 252 of the support 201. This lever has a forked end 253 which engages a groove 254 formed on the worm 223. The end of the lever 250 extends up as shown at 255 and presses against the valve stem 218. Whenever the pressure in the condensing chamber rises to such a degree that the pressure between the worm 223 and the gear 222 is sufficient to compress the spring 224, the axial movement of the worm 223 on the squared end of the shaft 225 moves the lever 250 and opens the valve 217 relieving the pressure through the openings 250. An oil pipe 260 which corresponds to the pipe 95 previously described opens into a chamber 261 in which the worm 223 operates. An oil suction pipe 262 extends down

below the level of the lubricant in the condensing chamber, and oil is drawn upward by the action of the worm 223 through the pipe 262, being discharged through the pipe 260 onto cooling shelves similar to the shelves 96 previously explained.

The method of operation of the form of the invention illustrated in Figs. 6 and 7 will be more or less evident from the foregoing description. The motor 227 being supplied with electric power from any convenient source, operates the pump 211 through the mechanism above described, circulating the oil through the pipes 260 and 262, and compressing refrigerant in the pump 211. The application of the current to the motor 227 is preferably regulated by a thermostat located in the chamber to be cooled as is common in the refrigerating art. It may, of course, be regulated manually, or by any other suitable means. The motor 227 operates until it builds up a considerable pressure in the condensing chamber and in the chamber 229 which is in open communication therewith through the opening 230. As soon as this pressure reaches a predetermined amount the diaphragm 233 opens the valve 238 allowing water to flow through the pipe 236, the cooling space 231, and the cooling space 204. As soon as the condensing chamber is sufficiently cooled to relieve this pressure the valve 238 closes shutting off the flow of cooling water. An expansion chamber, similar to that previously described, may be employed, and a valve 14, as previously described, may also be used.

I claim as my invention.

1. In a refrigerating apparatus, walls forming a condensing chamber, means for circulating a cooling fluid through the walls of said chamber, pump means for compressing a refrigerant, a body of lubricant surrounding said pump means, and means for circulating said lubricant over the inner walls of said condensing chamber.

2. In a refrigerating apparatus, walls forming a condensing chamber, means for circulating a cooling fluid through the walls of said chamber, pump means for compressing a refrigerant, a body of lubricant surrounding said pump means, means whereby said pump means circulates said lubricant over the inner walls of said condensing chamber, a series of water cooled shelves formed on the inner walls of said condensing chamber near the top thereof, and means for circulating said lubricant over said shelves and over the inner surface of the walls of said cooling chamber.

3. In a refrigerating apparatus, a pump, a driven gear connected to said pump, a driving gear, driving means connected to and driving said driving gear, a relief valve so connected that it will relieve excessive pressure on said pump, and means whereby said relief valve is opened whenever there is an excessive pressure developed between said driven and said driving gear.

4. In a refrigerating apparatus, walls forming an expansion chamber, a pipe for drawing refrigerant from said chamber, a lip surrounding a cavity into which said pipe extends, said lip forming an annular space with the walls of the expanding chamber, and means for discharging refrigerant into said annular space.

5. In a refrigerating apparatus, walls forming a condensing chamber, means for circulating a cooling fluid through the walls of said chamber, a valve for controlling the flow of cooling fluid through said walls, and means for opening said valve only when the pressure in said chamber rises above a certain amount.

6. In a refrigerating apparatus, walls forming a condensing chamber, means for circulating a cooling fluid through the walls of said chamber, a pump in said chamber, a motor connected to said pump, an extension of the walls of said chamber surrounding said motor, and means for passing said cooling fluid through the walls of said extension.

In testimony whereof, I have hereunto set my hand at Los Angeles, California, this 23rd day of August, 1915.

HOWARD H. CARPENTER.