US 20050167026A1

(19) United States

(12) Patent Application Publication

(10) Pub. No.: US 2005/0167026 A1

(43) Pub. Date: Aug. 4, 2005

Dronzek et al.

(54) DIRECTIONAL TEARING POLYMERIC LABELS FOR CLEAN REMOVABILITY

(76) Inventors: **Peter J. Dronzek**, Thornwood, NY (US); **Wallace J. Zychowski**, Norway, MI (US); **Jeffrey P. Bau JR.**, Neenah, WI (US)

Correspondence Address:
HEDMAN & COSTIGAN P.C.
1185 AVENUE OF THE AMERICAS
NEW YORK, NY 10036 (US)

(21) Appl. No.: **11/024,230**

(22) Filed: **Dec. 28, 2004**

Related U.S. Application Data

(60) Provisional application No. 60/533,764, filed on Dec. 30, 2003.

Publication Classification

(51) **Int. Cl.**[7] **B65D 41/32**; B65D 1/00; B65B 7/00

(52) **U.S. Cl.** **156/69**; 428/35.7; 220/359.1

(57) **ABSTRACT**

Method and elements are described for placing a closure element on a container where the closure element functions as a sanitary seal or a tamper evident seal. The

(a) providing a sized uniaxially oriented polymer film having a discontinuity on an edge that is substantially perpendicular to the machine direction of said uniaxially oriented polymer;

(b) applying an adhesive to at least a portion of said sized uniaxially oriented polymeric film having a discontinuity of an edge to form a closure element bearing an adhesive; and

(c) placing on said container, said closure element bearing an adhesive, with the edge of said closure element having a discontinuity being substantially perpendicular to the direction in which sized uniaxially closure element is to separated.

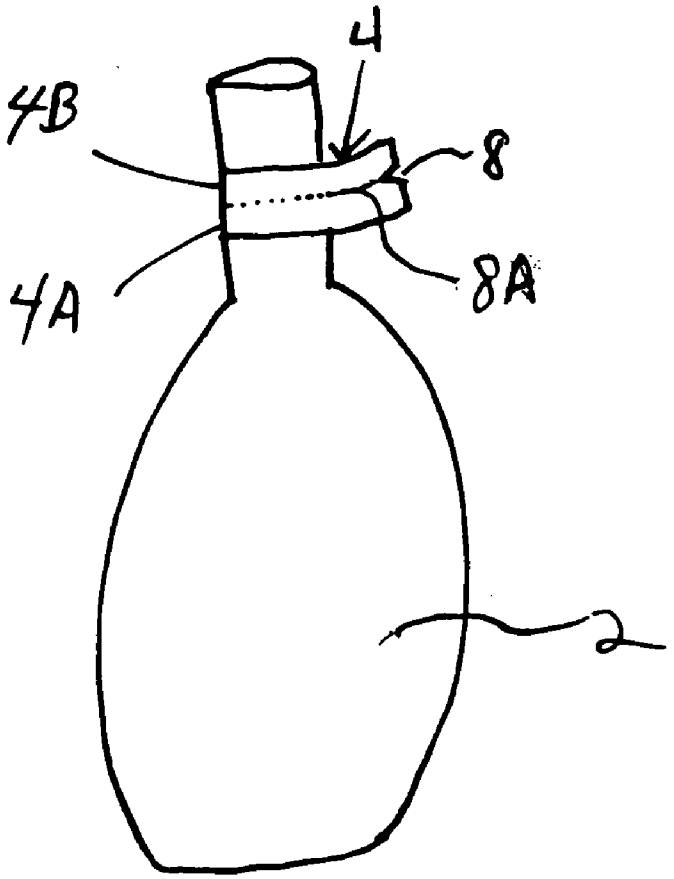

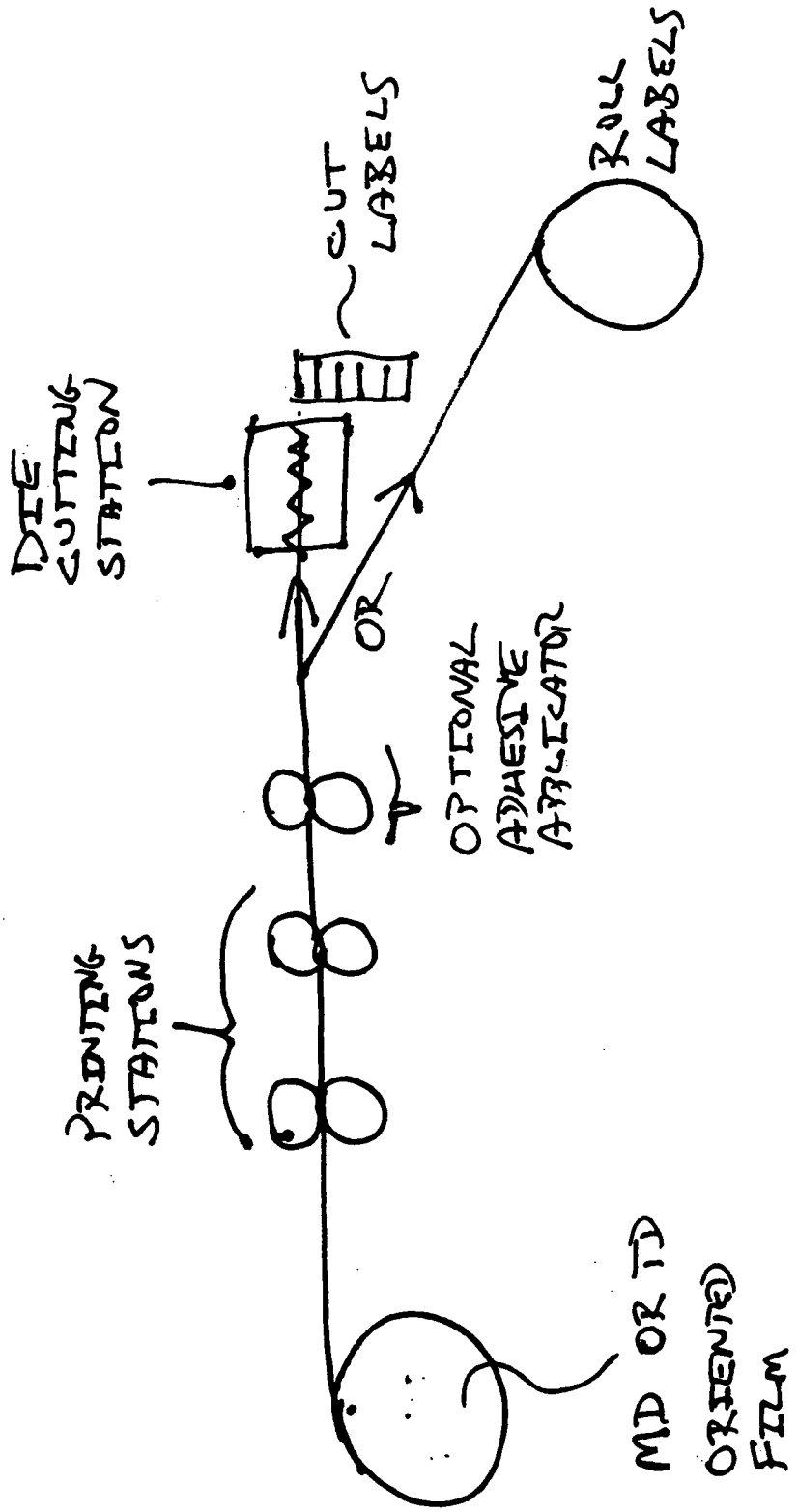
DIE CUTTING STATION
CUT LABELS
ROLL LABELS
OR
OPTIONAL ADHESIVE APPLICATOR
PRINTING STATIONS
MD OR TD ORIENTED FILM

FIG 1

FIG. 2

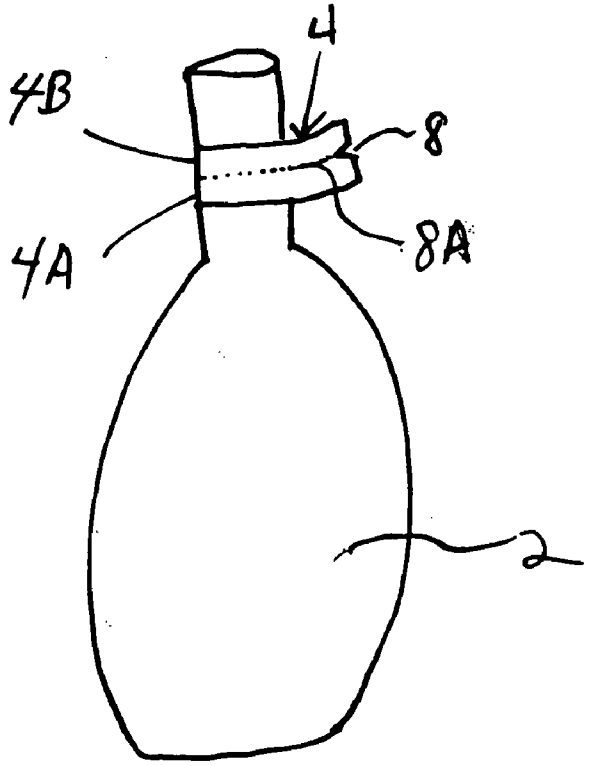

FIG. 3

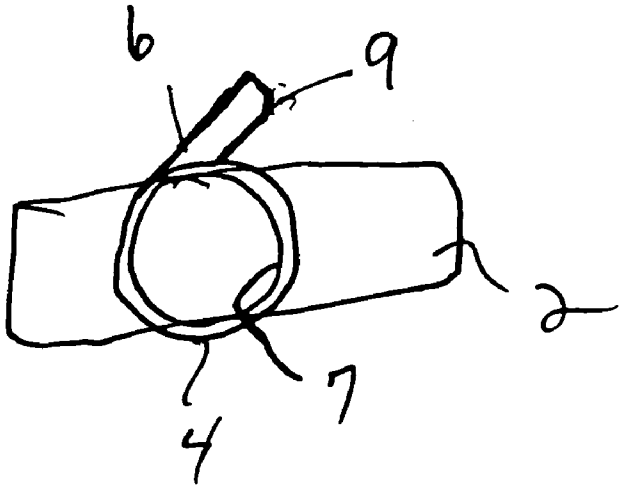

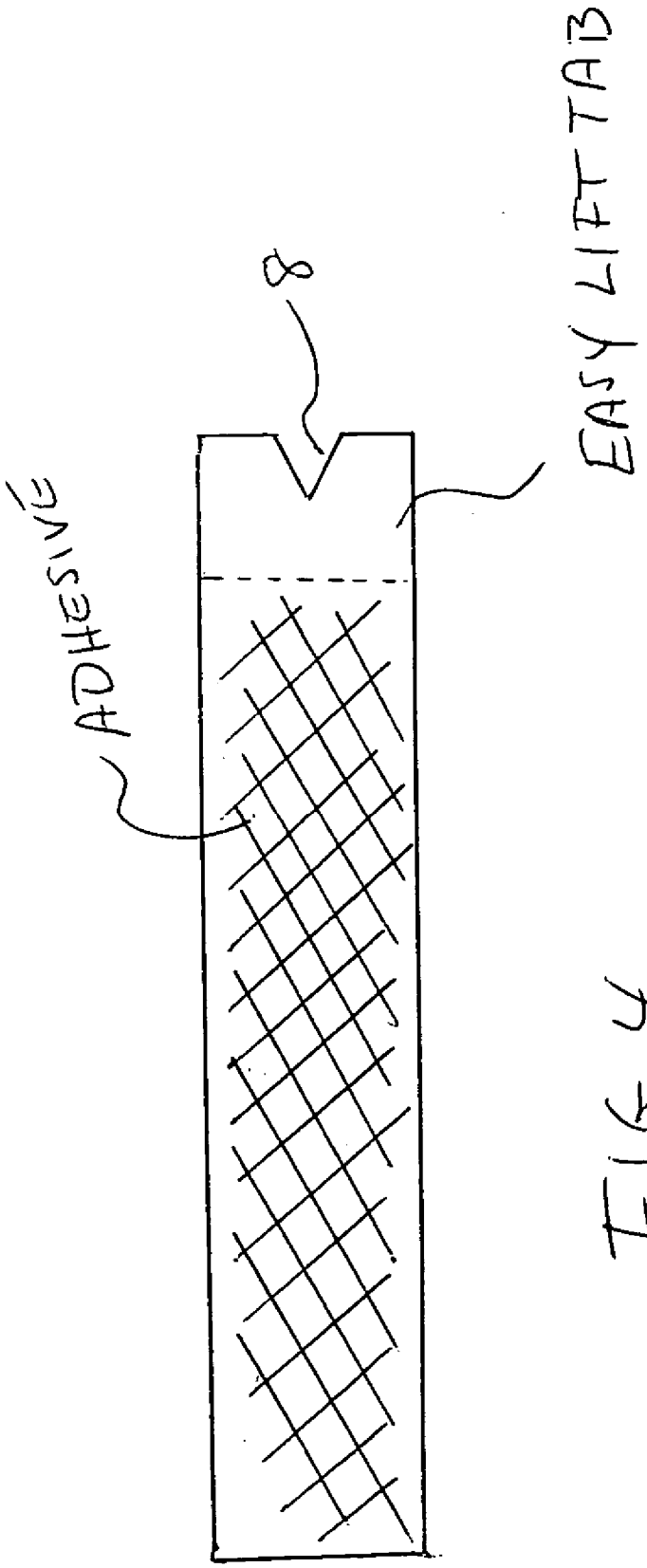

FIG. 4

FIG. 5

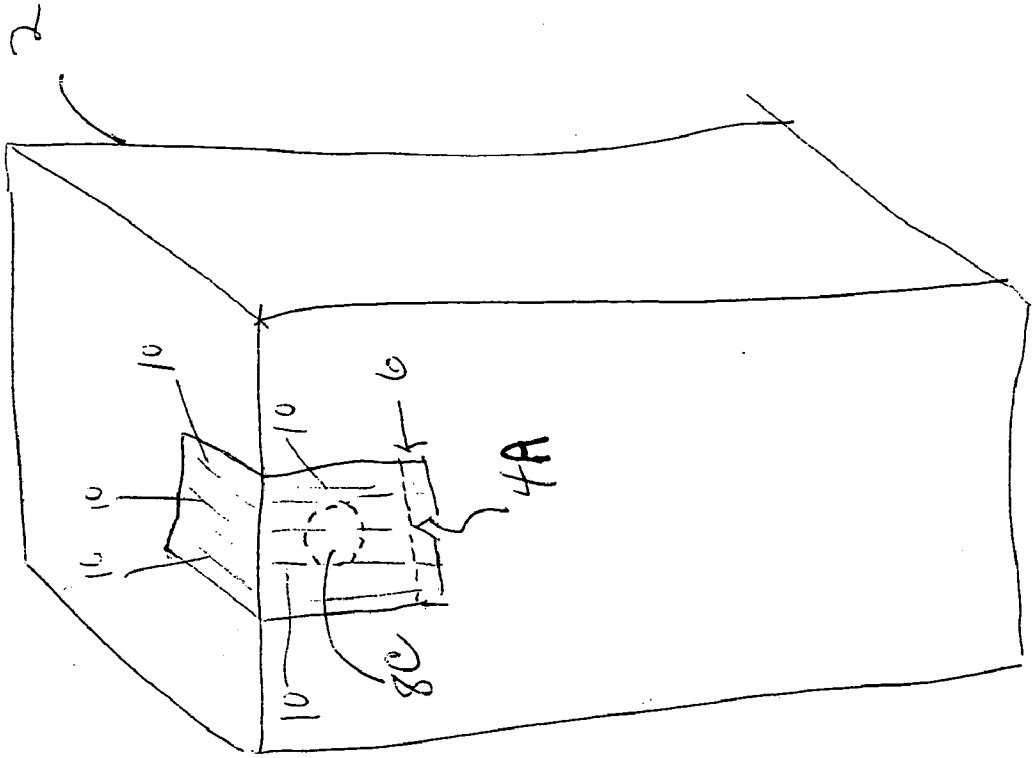

DIRECTIONAL TEARING POLYMERIC LABELS FOR CLEAN REMOVABILITY

FIELD OF THE INVENTION

[0001] This invention relates to specially fabricated polymeric films having a directional tear orientation without the use of perforations or scoring, which are adapted for use as closure elements for food and beverage containers with or without printed indicia. The addition of printed indicia makes the tearable polymeric films also useful as a part or all of the label of a container. The containers may be made by injection or blow-molding suitable polymeric compositions, or by conventional techniques for fabricating glass or metal containers.

BACKGROUND OF THE INVENTION

[0002] Plastic, glass and metal containers or bottles are prevalent today in a wide variety of shapes and sizes for holding many different kinds of materials such as light duty liquids (e.g., dishwashing detergent), heavy duty liquids (e.g., laundry detergents), condiments, food products, motor oil, vegetable oil, herbicides, etc. Generally, these containers are fabricated from a layer or a plurality of layers of thermoplastic polymers, particularly olefins such as polypropylene or polyethylene, polycarbonate, fluoropolymers, polyimides and polyesters, such as PET and PBT by means of blow molding or injection molding or conventional glass and metal fabrication techniques.

[0003] Generally, such containers are provided with a label which designates the trade name of the product and may contain other information as well. In many instances, the label is merely attached to the container after it is formed by means of adhesive such as heat activated, pressure sensitive, hot melt or cold glue adhesives. In many cases, a paper or polymeric film is used as a sanitary seal or a tamper evident seal which is affixed to the opening of the container in such a manner that the opening of the container will destroy the integrity of the paper or polymeric film that is affixed to a container. In the case of polymeric films, difficulty in tearing the polymeric film has resulted in the use of perforations or scoring of the polymeric film to make the container's contents accessible to the consumer without the need to use a knife or pliers to fracture the polymeric film to start tearing and to control the direction of tear. The application of perforations is an expensive and sometime difficult procedure because the perforations may weaken the film and are difficult to place in register with the opening of the container so that they may be easily fractured by a fingernail or a knife. If the film is not applied in register with the opening, the adhesive may make the removal of the film without a knife very difficult. Liquid containers such as plastic or glass salad containers may use a film as a label that is wrapped around the neck of the plastic or glass container in register with the location or the gap between the container and the cap.

[0004] Methods and articles describing labeling as described with a solvent glue system or an aqueous adhesive systems are well known in the art for labeling of plastic, glass or metal containers using film or polymeric labels For example, U.S. Pat. Nos. 6,663,746 and 6,517,664, which are incorporated by reference, teach that polymeric sheets or rolls suitable for printing can be used in cold glue labeling of polymeric substrates on plastic glass or metal containers.

[0005] U.S. Pat. No. 5,585,193 discloses labels prepared from a multilayer composite cast extruded and oriented in the machine direction. The composite also comprises an adhesive layer for adhering the label to a substrate. The advantage provided by such composites is improved die-cutability. A couponable label system that uses a uniaxially orient polymeric film is disclosed is Ser. No. 09/888,121, filed Jun. 22, 2001, which is incorporated by reference.

[0006] The present state of the art thus shows that durable labels comprising white opaque, transparent, translucent, clear or contact clear polymeric films having judiciously selected characteristics of thickness, specific gravity and coefficient of expansion and contraction and provided with a heat activatable adhesive coating, pressure sensitive adhesive, hot melt adhesive or cold glue adhesive can be applied without creasing, wrinkling or shrinking due to environmental conditions, physical abuse and/or flexing of the container material. Polymeric labels as described are particularly well adapted to perform as a tamper evident seal but do not separate readily or in a predefined direction without perforating or scoring of the polymeric label substrate. Furthermore, it has been shown in U.S. Pat No. 5,192,936 that labels with removable sections can be cleanly separated when provided from polymeric face stock by pattern printing with a permanent adhesive the area to be permanently affixed and pattern-printing with a lesser strength adhesive with selectively removable features under the coupon-removable area. This patent teaches the use of less adhesive, a different adhesive or a modified adhesive to achieve the desired objectives. In addition, the prior art teaches, in U.S. Pat. No. 5,585,193, that using a machine-direction oriented film improves the die-cuttability of labels prepared from such films.

[0007] In the prior art, it is known to employ, on the cap and upper portion of the container as a tamper evident seal, a thin band of uniaxially oriented polymeric film that has weakening slits in the film arranged in such a manner that when the polymeric film is positioned on the cap and container, the weakening slits are substantially parallel to the predominant direction of orientation of the uniaxially oriented polymer film and substantially parallel to the longitudinal axis of the container. The purpose of the slits is to allow easy removal of the polymeric film by pulling on the edge of the polymeric film that is at the top of the cap. These prior art seals have been wrapped around the cap and container and have been solvent welded together and shrunk in place to form a form fitting seal. It is removed by rupturing the seal at one of the weakening slits and the shrunken distorted piece with jagged edges is discarded.

SUMMARY OF THE INVENTION

[0008] The invention comprises a method of providing a container with a closure element for sealing containers by either providing a sanitary seal or a tamper evident seal. In addition, the seal may be manufactured, as a label for application to the closure area of a container, where the label is made from a uniaxially oriented film substrate that separates into at least two segments by tearing cleanly, without the presence in the film of any perforations or scoring in the direction of separation. The separable segments are defined by one or more discontinuity on an edge, the seal being made from a polymeric film that is uniaxially oriented and placed on the container in such a manner that the predominant

direction of orientation is substantially perpendicular to the edge having the discontinuity. This will result in the separation of the polymeric film along an axis which is substantially parallel to the axis of predominant orientation of the uniaxially oriented polymeric film.

[0009] The invention further comprises a directional tear orientation in a uniaxially oriented polymeric film, that adapted for use as a sanitary seal or a tamper evident seal, may be cleanly separated without the use of perforations or score lines as used in the art to weaken the substrate to induce tearing in the weakened area. Additionally, the polymeric films are adapted to have printed indicia and when used as tamper evident seal on a capped container, may be made of white opaque, transparent, translucent or contact clear films having a heat activatable adhesive, removable pressure sensitive adhesive, hot melt adhesive or cold glue adhesive on one side to affix the directional tear label to the container in such a manner that the predominant orientation direction of the uniaxially oriented polymeric film is substantially perpendicular to the axis of the container. A directional tear orientation may be provided by selectively notching the uniaxially oriented polymeric film on an edge that is substantially perpendicular to the predominant orientation direction of the uniaxially oriented polymer film. When the polymeric film is used as a sanitary or closure seal on a container such as a juice box or a foil beverage container, the polymeric film may be positioned in any orientation with regard to the longitudinal axis of the container.

[0010] The polymeric film seal may be easily and cleanly separated into two or more individual segments by tearing the polymeric film starting at the notch in the direction of orientation cleanly separating the seal to allow access to an opening that can not be resealed and which does not have jagged edges or tears that occur with perforated or scored paper or polymeric films that are not mono direction oriented and that are not separated along the direction of orientation. Bi-axially oriented polypropylene even when scored or perforated does not consistently tear and separate in a clean straight manner. The same holds true for paper substrates. Polymeric films are preferred that are preferentially uniaxially oriented in the machine direction or cross-web direction exhibit clean tearing and separation properties in line with the direction of orientation when the polymeric substrate is torn. These polymeric films can be printed if desired and removed without distortion.

[0011] Accordingly, it is a principal object of the present invention is to provide for the use of mono-axially oriented polymeric films to make seals that do not have the shortcomings of the prior art seals.

[0012] It is a further object of the invention to provide a method for a seal having printed indicia for application to plastic, glass or metal containers using uniaxially oriented polymeric films with or without printed indicia.

[0013] It is still another object of the invention to provide sealed containers which have the unexpectedly superior properties described above.

[0014] These and other objects of the invention will become apparent from the present specification.

BRIEF DESCRIPTION OF THE DRAWINGS

[0015] **FIG. 1** is a flow diagram of a process employed to make sheets or rolls from which to die-cut labels according to the present invention;

[0016] **FIG. 2**. illustrates, in perspective view, a container **2** labeled in accordance with the present invention, the label **4** having separable top segment **4***a* and bottom segment **4***b* and having notch **8**. Dotted line **8**A is the predicted tear line which will be propagated from notch **8** when a part of the label (either **4**A or **4**B is pulled away from container **2**.

[0017] **FIG. 3** is a top perspective view of **FIG. 2** showing partly removed portion **6** of the label **4** pulled away from. container **2** where a half of the notch **8** is shown as notch portion **9**. The neck of the container **7** is shown schematically as a substantial concentric ring **7** within label **4**.

[0018] **FIG. 4** is a bottom view of a label/seal according to the invention showing a notch **8** on an edge that is perpendicular to the predominant degree of orientation with cross marks to indicate an adhesive, a dotted line to mark the end of an easy lift tab having low or no adhesive.

[0019] **FIG. 5** is a perspective view of a container where opening **8**C has been sealed with a seal where the notch **4**A is placed in an edge having a zone **6** that is free of adhesive and the predominant degree of orientation is shown by lines **10**.

DETAILED DESCRIPTION OF THE INVENTION

[0020] The polymeric film is selected from a monolayer film or a multilayer film, the monolayer film and the multilayer film being uniaxially-oriented preferentially in the machine direction or transverse direction and the multilayer film comprising at least one skin layer and a core layer, each of the layers being formed from at least one polymer, the monolayer films and the multilayer films also being selected from films which are surface printable and films which are capable of being rendered surface printable, and having a thickness between 0.001 and 0.010 inches.

[0021] The monolayer film may comprise a polymer selected from any of olefin polymers such as polypropylene, polyethylene, polycarbonate or a polyester such as PET or PBT or a polyamide such as nylon or polystyrene. The multilayer film may comprise at least one skin layer comprising any of the above mentioned polymers, a core layer comprising any of the above mentioned polymers, and at least one skin layer comprising any of the above mentioned polymers.

[0022] The seals in which the polymeric film comprises a monolayer or multiple co-extruded layers selected from opaque or clear virgin polyolefin homopolymer, opaque or clear recycled olefin homopolymer, opaque or clear reprocessed olefin homopolymer, opaque or contact clear virgin olefin copolymer, contact clear recycled olefin copolymer, opaque or contact clear reprocessed olefin copolymer or blends of any of the foregoing; and special mention is made of such seals in which the print-receiving face of the polymeric film includes at least one print enhancing surface to enhance the anchorage of ink, the print surface layer comprising a corona-treated, or primed print-receiving surface.

[0023] In another of its major aspects, the present invention contemplates, a seal having at least two separable segments or sections disposed over a closure seal where one segment remains permanently affixed to the container while the other segment can be physically removed or separated from the glass, plastic or metal container. The seal is made from a polymeric film that is uniaxially oriented, and the separation discontinuity being located so that a line which is extended in the direction of tear is substantially parallel to the axis of predominant orientation of the polymeric film.

[0024] A print-receiving face of the polymeric film includes at least one print enhancing surface to enhance the anchorage of ink, the print enhancing surface comprising a primer, a product of flame-treatment, corona-treatment or chemical treatment, a co-extruded print receiving layer or a combination of any of the foregoing layers. Separatable segments are provided with a continuous or patterned adhesive layer for anchoring the unseparated seal segments to a surface.

[0025] Closure elements may be made of polymeric film wherein the polymeric film is selected from a monolayer film or a multilayer film, the monolayer coextruded film and the multilayer film being uniaxially oriented and the multilayer film comprising at least one skin layer and a core layer, each of the layers being formed from at least one polymer, the monolayer films and the multilayer films also being selected from films which are surface printable and films which are capable of being rendered surface printable, and having a preferred thickness between 0.002 and 0.008 inches. Such closure elements wherein the monolayer film comprises one selected from any of the above mentioned polymers.

[0026] Closure elements may comprise a multilayer film which comprises one selected from at least one skin layer comprising any of polypropylene, polyethylene and polyester, a core layer comprising any of the above mentioned polymers and at least one skin layer comprising any of the above mentioned polymers.

[0027] The closure element will be sized in accordance to the size of the container and the function that the closure element is to perform. The label design and layout will be oriented and cut out of the uniaxially oriented polymer film based on the axis of orientation of the polymer film in the machine direction or transverse direction to control directional tearing properties. It is noted that to change from a machine direction uniaxially oriented substrate to a transverse direction uniaxially oriented substrate, the label design must be rotated 90 degrees to achieve the same directional tear properties. When the closure element is to function as a sanitary seal on a foil or polymer juice container, a sized closure element may be from 1.0 cm to 5 cm by 1 by 5 cm and will have a thickness of about 0.003 inches. If the closure element is to function as a tamper evident seal on a typical 8 ounce salad dressing container may be made of polymer film which is about 0.003 inches thick. Other application may be sized according to the application and the desired performance of the closure element.

[0028] The polymeric film may comprise a monolayer or multiple co-extruded layers selected from opaque or clear virgin olefin homopolymer, opaque or clear recycled olefin homopolymer, opaque or clear reprocessed olefin homopolymer, opaque or contact clear virgin olefin copolymer, contact clear recycled olefin copolymer, opaque or contact clear reprocessed olefin copolymer or blends of any of the foregoing; and special mention is made of polypropylene.

[0029] The print-receiving face of the polymeric film includes at least one print enhancing surface to enhance the anchorage of ink, said print surface layer comprising a corona-treated, flame treated, plasma treated, primed or coated print-receiving surface.

[0030] The invention also includes novel containers having a closure element either applied as described above or as defined above.

[0031] The terms "virgin", "recycled" or "reprocessed" when used herein and in the appended claims mean, respectively, new resin, reground resin, and resin sheets and the like which have been prepared for other uses, and after-treated to remove coatings, etc.

[0032] The term "regrind compatible" when used herein and in the appended claims means that containers with the closure seals of the invention-can be reground and molded or re-extruded after being mixed with virgin material. Regrind compatibility is determined by regrinding, mixing and molding or extruding.

[0033] The term "contact clear" when used herein and in the appended claims means a hazy material difficult to see through, but which, in intimate contact with a surface, transmits an underlying image. Polyethylene films are a common example. Contact clarity is determined by a simple trial and error test.

[0034] The terms "primer", "flame-treatment", "corona treatment", and "chemical treatment" when used herein and in the appended claims mean, respectively, a deposited coating for promoting adhesion generally comprising a filled or unfilled polymer, surface activation by carefully exposing to a bank of flames, without burning or distortion, exposure to high voltage direct current to microscopically etch the surface, and carefully etching the surface with chemicals known to be effective for this purpose.

[0035] A polymeric substrate with directional tear properties defines a film that will tear preferentially in one direction in a relatively straight line parallel to the predominant axis of orientation without the need for perforations or scores that weaken the substrate as is done for paper and polymeric substrates that do not have directional tear properties.

[0036] The terms preferentially oriented or predominantly oriented describe a polymeric film is stretched to a greater degree in one direction (machine direction MD or transverse direction TD such that the preferential orientation imparts tear properties substantially parallel to the predominant direction of orientation.

[0037] Perforation means cutting in a defined pattern a slit in a substrate using a die or cutting wheel to form a regularly spaced series of discontinuities that weaken the substrate so segments can be separated. Scoring means partially cutting into but not through all or part of a surface of a substrate to selectively weaken the substrate in the scored area so it can be separated along the score line.

[0038] The uniaxially oriented polymeric film is oriented using conventional techniques. As is well known, cast film

can or cannot be oriented, but is usually oriented to a minor degree in the machine direction (MD). Blown film is usually oriented due to the manufacturing process, but is not usually sold as oriented because it is a slight unbalanced orientation. Extruded and stretched film is usually oriented to a major degree by differential speed rolls and/or tenter processes, and orientation can be monoaxial or biaxial. Although many such films, mono-layered and multi-layered, can be used in the present invention, it is important to select and to use uniaxially oriented film as the substrate which means it is preferentially oriented in one direction and has directional tear properties.

[0039] A notch is defined as a discontinuity in an edge which is formed by the removal of a portion of an edge. A V-shaped notch is preferred. The notch may be sized to allow for convenient engagement with a finger nail and generally the notch will extend from the edge for about 0.1 to 0.25 inches with a V shaped angle of 5 to 60°. Other notch configurations may also be used provided they provide access to a finger nail or other instrument for the purpose of initiating the removal of the label or seal.

[0040] The substrate should preferentially tear along the axis of predominant orientation. Some variability is permissible, and a +/−15 degree deviation from parallel is permissible to account for variability in process orientation techniques but a +/−7 degree deviation from parallel is preferred.

[0041] A heat activated adhesive may be applied from a printing roll or co-extruded as part of the substrate manufacturing process. Pressure sensitive adhesives preferably of the removable type known in the art are directly coated, on to the substrate before it is laminated to a release liner or the pressure sensitive adhesive is coated onto the release liner and transfers to the substrate when laminated. Conventional hot melt or aqueous adhesives with or without suitable hydrophilic materials may be applied on the labeling apparatus to the substrate right before labeling. Selected inkwork comprising printed indicia will be surface printed or reverse printed on the back surface, i.e., under the adhesive for clear or contact-clear labels or on the surface opposite the adhesive for opaque labels by a printing process as described above or an art-recognized equivalent. Special mention is made of opaque directional tear films surface printed with the primary label graphics on the side opposite the adhesive and printed on the adhesive side before application of the adhesive with graphics that are exposed when the polymeric substrate is torn, the segment removed revealing the back side graphics. If a coextruded substrate is used an antistatic and/or slip layer can be co-extruded with the base polymer sheet during the extrusion process. After die-cutting, as will be described later, individual labels will be applied by high speed machinery of well-known types for application to a container.

[0042] The preferred embodiments of the labels of the present invention are fabricated from white opaque extruded, cast or blown films that are oriented to provide directional tear properties. Preferably polyolefins, e.g., polyethylene or polypropylene, or polyester are used and these may optionally be provided with a print enhancing coating or co-extruded layer such as those well known to those skilled in this art. Opaque films are preferred to mask the closure until the seal is broken to cleanly separate at least two segments along a tear line. Optional printed indicia on the back side of the opaque removable area can now be exposed.

[0043] The films can be e.g., provided in rolls or sheets which may be printed with conventional label indicia on conventional printing equipment and furthermore can be die cut and applied to plastic, glass or metal containers using conventional labeling equipment.

[0044] The preferred construction of the improved directional tearing labels and seals of the present invention uses a solid, i.e., non-multicellular thermoplastic film comprised of a uniaxially extruded polypropylene polymer. Such films are marketed under the name "PRINTRITE.RTM." by Trico Industries, Davisville, R.I., 02854, U.S.A. Preferred multi-layered films include PRIMAX.RTM. NA-R 400, a corona-treated, semi-rigid matte white polyolefin film, PRIMAX.RTM. NA 400, a corona-treated flexible matte white polyolefin film by Avery Dennison, Concord, Ohio 44077, U.S.A. In order to enhance the printing qualities of the thermoplastic film it may be provided with, for example, a print receptive co--extruded layer known to those skilled in the art, filled, e.g., lightly filled with clay/calcium carbonate, silica and/or china clay, etc., or, preferably, an unfilled primer coating, such as an acrylic type resin. Typically such primers are available commercially from sources well known to those skilled in this art. For example, polyester primers are marketed by Rohm & Haas, Philadelphia, Pa., U.S.A., and acrylic or polyurethane primers by Neo Resins, Wilmington, Mass. 01887, U.S.A. The coating helps insure that the surface of the film will accept high quality printing and may also improve the abrasion and scuff resistant qualities of the finished label. It has been found that the printing quality of the present thermoplastic film labels is equivalent to the printing quality of conventional paper labels. Finally, individual labels may be die cut from the sheets or rolls in the conventional manner e.g., by rotary die cutting, by square cutting, high die stack cutting, and the like.

[0045] With respect to printing, although various methods are used in this art to apply information or decorations to plastics, traditional equipment is used herein. To avoid unnecessarily detailed description, reference is made to Modern Plastics Encyclopedia, Mid-October Issue, 1989, "Printing" by Hans Deamer, pages 381-383.

[0046] Selection of the printing inks for use, and formation of print-enhancing surfaces and the production of images or indicia are well within the skill of workers in this field. Also, it is easily obvious to the artisan to produce the films of this invention with direct printed and reverse printed indicia on any print-receiving surface and to carry out the printing operation in the stages set forth in the description above. The inclusion of coatings and primers for sealing the printed image and to enhance ink and adhesive bonding is also conventional in this art.

[0047] The antistatic and/or slip agents preferred if used herein are applied as coatings or as coextruded layers, incorporated in the resin used for the labels. Such coatings are also applied by techniques known to those skilled in this art. For example, a thin coat of antistatic agent can be applied to one surface of the film which may already have been printed in reverse. Suitable such coatings can be selected from the many commercially-available materials

known in this art, such as listed, for example in Modern Plastics Encyclopedia, Mid-October Issue, 1987, "Antistatic Agents" by J. L. Rogers, pages 130 and 132, as well as pages 579-581. Preferred for use herein are commercially-available antistatic coating compositions available, for example, from Akzo Chemie America, Chicago, Ill., under the trade name or designation Armostat.RTM. Aqueous Ethoquad CY12, from distributors of a product of the successors to Union Carbide Corp., Danbury, Conn., under the trade name or designation Silwet.RTM. L-77, a modified silicone, or from Flint Ink, Ann Arbour, Mich. 48105 U.S.A. under the tradename "FLEXCON" a proprietary mixture which is gravure, flexographic and screen applicable. The physical properties of the aforementioned uniaxially oriented thermoplastic polypropylene film (PRINTRITE.RTM.), are set forth in Table 1:

TABLE 1

Density 0.905 g/cm.sup.3
Thickness 0.0024–0.0038 inches
Folding Endurance Excellent Coefficient of Expansion**
81–100 .times. 10.sup.–6 in/in/.degree. C.
% Shrink at 212.degree. F., MD, TD <2%
Surface treatment Corona-discharge

*MD= machine direction; TD = transverse direction
**Modern Plastics Encyclopedia, October 1989, page 606

[0048] A preferred polymeric film is 3.5 mil LLWF, sold by Avery Dennison, Concord, Ohio, which is a uniaxially oriented corona treated, semi-rigid opaque white polyolefin film having a maximum opacity of 80.0; an MD tensile modulus of 170,000 psi; a tensile elongation of MD:80%; a Gurley in extruded or coextruded layers, such as but not limited to erucamide, oleoamide or steramide. Other types of migratory slip additives are silicone oils. Examples of non-migratory slip aids are talc platelets, silicone spheres or waxes. In any event, migratory, non-migratory, and combinations thereof, can be used as slip agents.

[0049] The patents, applications, publications and test methods mentioned above are incorporated herein by reference.

[0050] Many variations of the present invention will suggest themselves to those skilled in the art in light of the above detailed description.

[0051] All such obvious modifications are within the full intended scope of the appended claims.

DESCRIPTION OF THE PREFERRED EMBODIMENTS

EXAMPLE

[0052] Roll stock 3.5 mil LLWF white machine direction oriented polyolefin film was corona treated on two sides and was printed with rotogravure nitrocellulose based inks from Flint Ink and then was coated with over print varnish GV-13691 from INX and back coated on the glue receiving side with back side water absorbing varnish TMW-95493 from Flint Ink in one machine pass on a 10 station Schiavi Rotogravure press running roll to roll. In a secondary automatic process, sheets of labels were cut in register from the rolls of printed labels above.

[0053] Labels were then off line die cut from the sheets into a size suitable to encircle the neck of a salad container having a diameter of approximately 1.25 inches. These labels have a trapezoidal shape measuring laterally at the longer top portion about 6 inches; at the bottom portion about 5.5 inches and having a short dimension of about 2 inches with a 3/16 inch "V" shaped notch to act as a starting point for tearing. The notch is located on the short dimension edge which is perpendicular to the predominant orientation of the film.

[0054] Lastly, the labels were applied to the necks of salad dressing plastic containers as a closure seal using aqueous adhesive from Henkel Adhesives and were allowed to dry for 10 days. The closure seal was then peeled back at the notch and the label separated into two clean segments as it was torn along the axis of orientation allowing an opening for the container and showed that the closure seal had been broken or tampered with.

[0055] Another version is constructed exactly as above except the adhesive side coating is also used on the front but in the glue flap area only to help the adhesive set up and dry more rapidly. This version also has three notches instead of one to make the label fragile and difficult to remove without damage for tamper resistance purposes.

1. A method of providing a container with a closure element which is adapted to be separated in with the opening of said container, said method comprising:

(a) providing a sized uniaxially oriented polymer film having a discontinuity on an edge that is substantially perpendicular to the machine direction of said uniaxially oriented polymer;

(b) applying an adhesive to form a closure element bearing an adhesive; and

(c) placing on said container, said closure element bearing an adhesive, with the edge of said closure element having a discontinuity being substantially perpendicular to the direction in which sized uniaxially closure element is to separated.

2. A method of providing a container with a closure element which is adapted to be separated in connection with the opening of a container as defined in claim 1 wherein said closure element is a tamper evident seal for a container having a cap and said edge having the discontinuity is placed substantially perpendicular to the longitudinal axis of the container.

3. A method of providing a container with a closure element which is adapted to be separated in connection with the opening of a container as defined in claim 1 wherein said closure element is a sanitary seal for a container.

4. A method of providing a container with a closure element which is adapted to be separated in connection with the opening of a container as defined in claim 1 wherein said polymeric film is selected from the group consisting of polypropylene, polyethylene, polycarbonate, polyester, polyamides, and polystyrene.

5. A method of providing a container with a closure element which is adapted to be separated in connection with the opening of a container as defined in claim 4 wherein the polymer is polypropylene.

6. A method of providing a container with a closure element which is adapted to be separated in connection with the opening of a container as defined in claim 1 wherein in

step (b) an adhesive is first placed on at least a portion of a surface of the polymer film before placing the polymer film on the container.

7. A method of providing a container with a closure element which is adapted to be separated in connection with the opening of a container as defined in claim 1 wherein in step (b) the adhesive is placed on all of the surface of the polymer film.

8. A method of providing a container with a closure element which is adapted to be separated in connection with the opening of a container as defined in claim 1 wherein in step (b) the adhesive is placed on a part of the surface of the polymer film.

9. A method of providing a container with a closure element which is adapted to be separated in connection with the opening of a container as defined in claim 2 wherein the closure element is applied so that the discontinuity on the edge of said closure element is applied in register with an area on said container where said cap ends and said container begins.

10. A method of providing a container with a closure element which is adapted to be separated in connection with the opening of a container as defined in claim 1 wherein the adhesive is applied to said closure element just prior to placing said closure element on said container.

11. A method of providing a container with a closure element which is adapted to be separated in connection with the opening of a container as defined in claim 1 wherein the adhesive is applied to said closure element and is dried and rewetted just prior to placing said closure element on said container.

12. A method of providing a container with a closure element which is adapted to be separated in connection with the opening of a container as defined in claim 1 wherein the adhesive is a hot melt adhesive.

13. A method of providing a container with a closure element which is adapted to be separated in connection with the opening of a container as defined in claim 1 wherein the adhesive is a cold glue adhesive.

14. A method of providing a container with a closure element which is adapted to be separated in connection with the opening of a container as defined in claim 1 wherein the adhesive is a pressure sensitive adhesive.

15. A method of providing a container with a closure element which is adapted to be separated in connection with the opening of a container as defined in claim 1 wherein said closure element has a print enhancing layer.

16. A method of providing a container with a closure element which is adapted to be separated in connection with the opening of a container as defined in claim 1 wherein said closure element has a print enhancing layer and printed indicia.

17. A closure element for a container, said closure element being made of a uniaxially oriented polymeric film having a discontinuity on an edge which is perpendicular to the machine direction of the orientation of said polymeric film, said closure element being at least partially coated on one side with an adhesive.

18. A closure element for a container as defined in claim 17, said closure element being made of a uniaxially oriented polymeric film having a discontinuity on an edge which is perpendicular to the machine direction of the orientation of said polymeric film, said closure element being fully coated on one side with an adhesive.

19. A closure element for a container, said closure element being made of a uniaxially oriented polymeric film having a discontinuity on an edge which is perpendicular to the machine direction of the orientation of said polymeric film as defined in claim 15 wherein said polymeric film is selected from the group consisting of films of polypropylene, polyethylene, polycarbonate, polyester, polyamide and polystyrene.

20. A closure element for a container, said closure element being made of a uniaxially oriented polymeric film having a discontinuity on an edge which is perpendicular to the machine direction of the orientation of said polymeric film as defined in claim 15 wherein said polymeric film is selected from the group consisting of polypropylene films.

21. A closure element for a container, said closure element being made of a uniaxially oriented polymeric film having a discontinuity on an edge which is perpendicular to the machine direction of the orientation of said polymeric film as defined in claim 15 wherein said adhesive is selected from the group consisting of hot melt adhesives, heat activated adhesives, pressure sensitive adhesives and cold glue adhesives.

22. A container having a closure element as defined in claim 15.

* * * * *