Feb. 15, 1966 A. SPRUNG 3,235,214

PARKING SPACE BARRIERS

Filed July 16, 1964

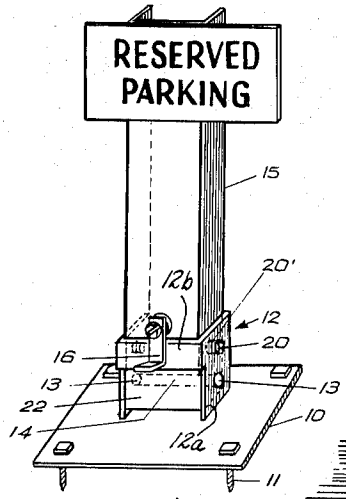

FIG. 1.

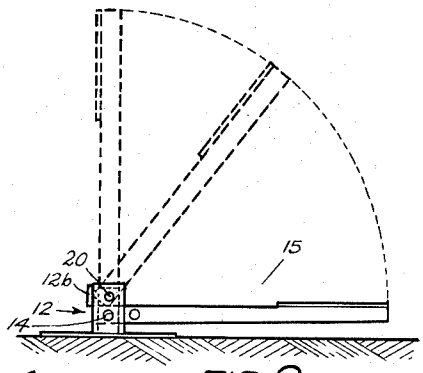

FIG. 2

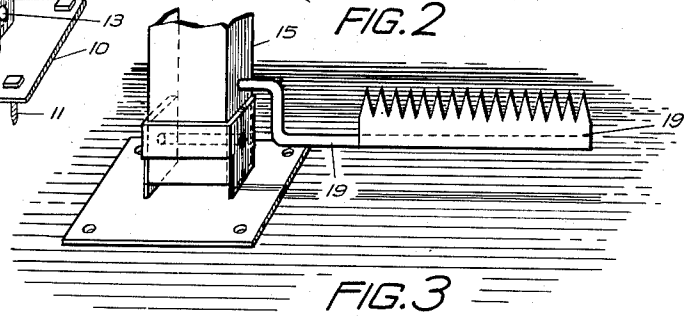

FIG. 3

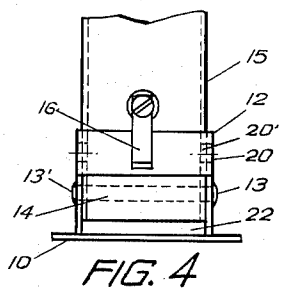

FIG. 4

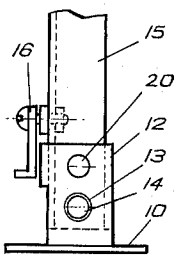

FIG. 5

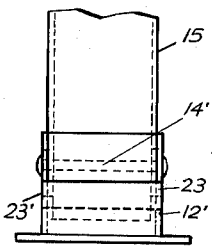

FIG. 6

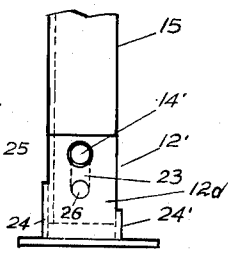

FIG. 7

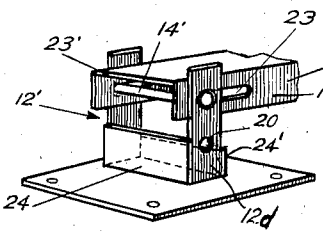

FIG. 8

INVENTOR.

Abraham Sprung

United States Patent Office 3,235,214
Patented Feb. 15, 1966

3,235,214

PARKING SPACE BARRIERS

Abraham Sprung, 43—32 Kissena Blvd., Flushing, N.Y.

Filed July 16, 1964, Ser. No. 383,068
12 Claims. (Cl. 248—158)

This invention relates in general to improvements in automobile parking space barriers and more particularly to such barriers that can be rigidly fixed and locked into position and also can be swingingly folded out of its barricade position. It may comprise a stanchion or arm which can be held in either a vertical or horizontal position and thereby will restrict and deter a car from entering a reserved auto parking space, particularly in such locations where there are no parking space attendants.

This problem is more predominant with tenants or owners of assigned parking spaces adjacent to multiple dwelling buildings, hospitals, business and factory buildings and other similar situations.

This invention may include many varied methods of operation of the folding barrier such as manual, mechanical or electronic.

Another object of this invention is to provide various combinations of the types of fold away barriers which can be operated from the ground. A further object of this invention is to provide a series of spikes or teeth mounted on a bar which can be put in and out of operation on the ground in conjunction with the stanchion at the will of the parking space owner.

A still further object of this invention is to provide an efficient, sturdy and fool-proof fold away parking barrier which shall be inexpensive and easy to operate.

Additional features and adaptations of this invention will hereinafter appear by reference to the accompanying drawing forming a part of this application in which like characters of reference designate corresponding parts throughout the several views in which:

FIG. 1 is a perspective view of the complete assembly showing the device embodying the invention with the stanchion in a vertical position.

FIG. 2 is a side view showing the stanchion swinging down from vertical to horizontal position.

FIG. 3 is a fragmentary perspective view of the device shown in FIG. 1 but modified by the addition of an attachment of spikes mounted on the stanchion.

FIG. 4 is a partial front vertical view of the structure shown in FIG. 1.

FIG. 5 is a fragmentary side elevation of the structure shown in FIG. 4.

FIG. 6 is a detail front view of a modification showing the stanchion with slotted walls.

FIG. 7 is a side view of the structure shown in FIG. 6.

FIG. 8 is a perspective view of the structure shown in FIG. 6.

In the disclosure, the parking barrier shown in FIG. 1 is shown fixed to the ground and usually placed in the center of a parking space. This view shows a hinge support **12** fixedly mounted or cast to a base plate **10** which which in turn is fastened to the ground with cement and/or bolts **11**.

The hinge support **12** consists of a rectangular socket disposed in a vertical position. In the embodiment shown in FIGS. 1 to 5, socket **12** comprises side vertical flanges or walls **12***a* interconnected by a front wall or web **12***b*, spaced from the base by an opening **22**. The socket **12** has no rear wall or web. This socket **12** has a hinge pin **14** fixed to its side walls **12***a*, which is used to hingedly support stanchion **15**. Stanchion **15** may be constructed of channel iron and so designed that its lower end will fit snugly in rectangular socket support **12** which is either part of or cast to base plate **10**. Stanchion **15** is provided

with hinge bearings **13** and **13'** arranged in the lower end of the side walls of the stanchion for receiving hinge pin **14**. When swinging stanchion **15** downward, the bottom end of same is arranged to clear the front wall **12***b* through said opening **22**. A latch **16** is privoted on a horizontal pivot **16***a* to the web of the stanchion, just above the socket **12**. Latch **16** holds stanchion **15** in such manner that it may not be swung downward inadvertently.

To put the barrier in an obstructive position, it is necessary to swingedly raise stanchion **15** from its horizontal position on the ground, to a vertical position, then securing it by turning latch **16** downward over the front wall or web **12***b* of support **12** thereby engaging and fixing stanchion **15** to said support **12**. In a reverse manner, stanchion **15** can be lowered from a vertical to a horizontal position by turning latch **16** upwards and above front wall or web **12***b* of support **12**. This operation will enable the operator to enter his parking space, as stanchion **15** is no longer in an obstructive position. The car will then straddle the lowered stanchion.

To insure the locking of the stanchion **15** while it is in a vertical position, a padlock can be inserted through the hole **20** in the socket and hole **20'** in a side flange of stanchion **15**.

In FIG. 3, member **19** is formed with teeth or spikes and is fixed to a side wall of stanchion **15**. The teeth project upward when the stanchion is in its vertical position and serve as an additional deterrent to unauthorized parkers or trespassers. When the stanchion **15** is lowered to allow a car to enter the reserved parking space, the teeth or spikes will lie flat and close to the ground.

FIGS. 6, 7, and 8 show a modification for holding and fixing stanchion **15** in a vertical position in socket **12'**. Socket **12'** comprises front and rear walls **24**, **24'** connected to spaced upstanding side arms or walls **12***d*. Slots **23** and **23'** about 1½ inches long are provided in the lower end of the side walls **12***c* of stanchion **15***a* instead of hole bearings **13** and **13'** shown in FIG. 1. Stanchion **15** is mounted on the upstanding arms or walls **12***d* by hinge pin **14'**. The slots **23** and **23'** engage hinge pin **14'** so that the pin will be located in the upper part of the slots **23**, **23'** when stanchion **15***a* is in a vertical position. At this time the bottom end of stanchion **15***a* is engaged and fixedly held into the socket or support **12'** between front and rear walls **24** and **24'**. Both front wall **24** and rear wall **24'** are at lower end of socket **12'**. Rear wall **24'** is less in height than wall **24**. The rear wall **24'** is required to be lower in order that stanchion **15***a* will not have any obstruction when lowered to the ground. To lower the stanchion **15***a* from vertical to horizontal position, same must be raised about 1½ inches, so that hinge pin **14'** is now located in the lower ends of slots **23** and **23'**. Stanchion **15***a* can be then swung downward to the ground. To perform this movement stanchion **15***a* is lowered downward above the rear wall **24'** of support **12'**. This arrangement can also have the additional use of a padlock by engaging same through slot **23** in stanchion **15***a* and hole **26** in the side wall **12***d* of socket or support **12'**. In this modification shown in FIGS. 6, 7 and 8, the same latching means **16** shown in FIG. 1 can be used in the same manner as previously described.

Although the present invention has been described in detail by way of illustration and example, it is understood that further changes and modifications may be made within the scope of the invention and the appended claims.

What I claim is:

1. A parking space barrier comprising a stanchion, a base having a vertically-disposed socket, said stanchion having a channelled lower portion having side walls projecting within said socket, means for swingably supporting

said stanchion at said lower portion relative to said socket, and means for maintaining said stanchion in a vertical position when said lower portion is in said socket.

2. A parking space barrier comprising a stanchion, a base having a vertically-disposed socket, said stanchion having a lower portion having side walls projecting within said socket, means for swingably supporting said stanchion at said lower portion relative to said socket, and means for maintaining said stanchion in a vertical position when said lower portion is in said socket, and said socket having an opening between said side walls for permitting swinging movement of said stanchion from horizontal to vertical position.

3. A parking space barrier comprising a stanchion, a base having a vertically-disposed socket, said stanchion having a lower portion having side walls projecting within said socket, means for swingably supporting said stanchion at said lower portion relative to said socket, and means for maintaining said stanchion in a vertical position when said lower portion is in said socket, and said socket having an opening between said side walls of said stanchion and said side walls of said stanchion being provided with vertical slots, whereby swinging movement of said stanchion from horizontal to vertical position may be effected.

4. A parking space barrier according to claim 3, and said means for maintaining said stanchion in vertical position comprising at least one transverse wall connected to at least one of said side walls of said socket.

5. A parking space barrier according to claim 3, wherein said supporting means comprises a transverse hinge pin carried by said socket and passing through said slots.

6. A parking space barrier comprising a stanchion, a base having a vertically-disposed socket, said stanchion having a lower portion having side walls projecting within said socket, means for swingably supporting said stanchion at said lower portion relative to said socket, and means for maintaining said stanchion in a vertical position when said lower portion is in said socket, and said socket having an opening between said side walls whereby swinging movement of said stanchion from horizontal to vertical position may be effected, and said means for maintaining said stanchion in vertical position comprising latching means.

7. A parking space barrier comprising a stanchion, a base having a vertically-disposed socket, said stanchion having a lower portion having side walls projecting within said socket, means for swingably supporting said stanchion at said lower portion relative to said socket, and means for maintaining said stanchion in a vertical position when said lower portion is in said socket, and wherein said supporting means comprises a transverse hinge pin carried by said socket and passing through openings provided in said side walls of said stanchion.

8. A parking space barrier comprising a channel-shaped, vertical stanchion, a support for said stanchion having at least two spaced-apart walls, a hinge pin fixedly mounted across said walls of said support, a hinge bearing, said hinge bearing comprising openings in the walls on the lower end of said stanchion, said openings arranged to engage said hinge pin, and means mounted on said stanchion for engaging said support.

9. A parking space barrier comprising a base, said base having a vertically-arranged socket open at its upper end, a stanchion having its lower end adapted to be received within said socket, means interconnecting said stanchion to said socket, permitting the swinging of said stanchion from vertical to substantially horizontal position, and said interconnecting means comprising vertical slots formed in the lower ends of said stanchion and a horizontal, transverse pin fixed to said socket and passing through said slots.

10. A parking space barrier comprising a base, said base having a vertically-arranged socket open at its upper end, a stanchion having its lower end adapted to be received within said socket, means interconnecting said stanchion to said socket, permitting the swinging of said stanchion from vertical to substantially horizontal position, and said interconnecting means comprising vertical slots formed in the lower ends of said stanchion and a horizontal, tranverse pin fixed to said socket and passing through said slots, said socket having front and rear walls at the lower end thereof adapted to receive the lower end of said stanchion when said stanchion is fixed in a vertical position.

11. A parking space barrier comprising a socket member open at its upper end, a stanchion member, said socket member having side walls and being adapted to receive the lower end of said stanchion member, means to connect the lower end of said stanchion member to said socket member, said means permitting said stanchion member to swing from vertical to horizontal position, said means including a horizontal pin on one of said members fixed to said side walls adapted to swingingly engage the other of said members.

12. A parking space barrier comprising a base, said base having a vertically-arranged socket open at its upper end, a stanchion having its lower end adapted to be received within said socket, and means interconnecting said stanchion to said socket, permitting the swinging of said stanchion from vertical to substantially horizontal position, and said stanchion having a bar near the lower end thereof, said bar substantially extending at a right angle from said stanchion, and a plurality of projections on said bar, said projections pointing in the same direction as said stanchion.

References Cited by the Examiner

UNITED STATES PATENTS

773,086	10/1904	Minor	248—371
977,921	12/1910	Zizinia	211—99
1,665,180	4/1928	Schepman	248—160
3,141,253	7/1964	Bartram	40—129

CLAUDE A. LE ROY, *Primary Examiner.*

R. P. SEITTER, *Assistant Examiner.*