April 29, 1924. 1,492,442

L. FOURNIER ET AL

COMPUTING MACHINE

Filed Sept. 2, 1919 7 Sheets-Sheet 1

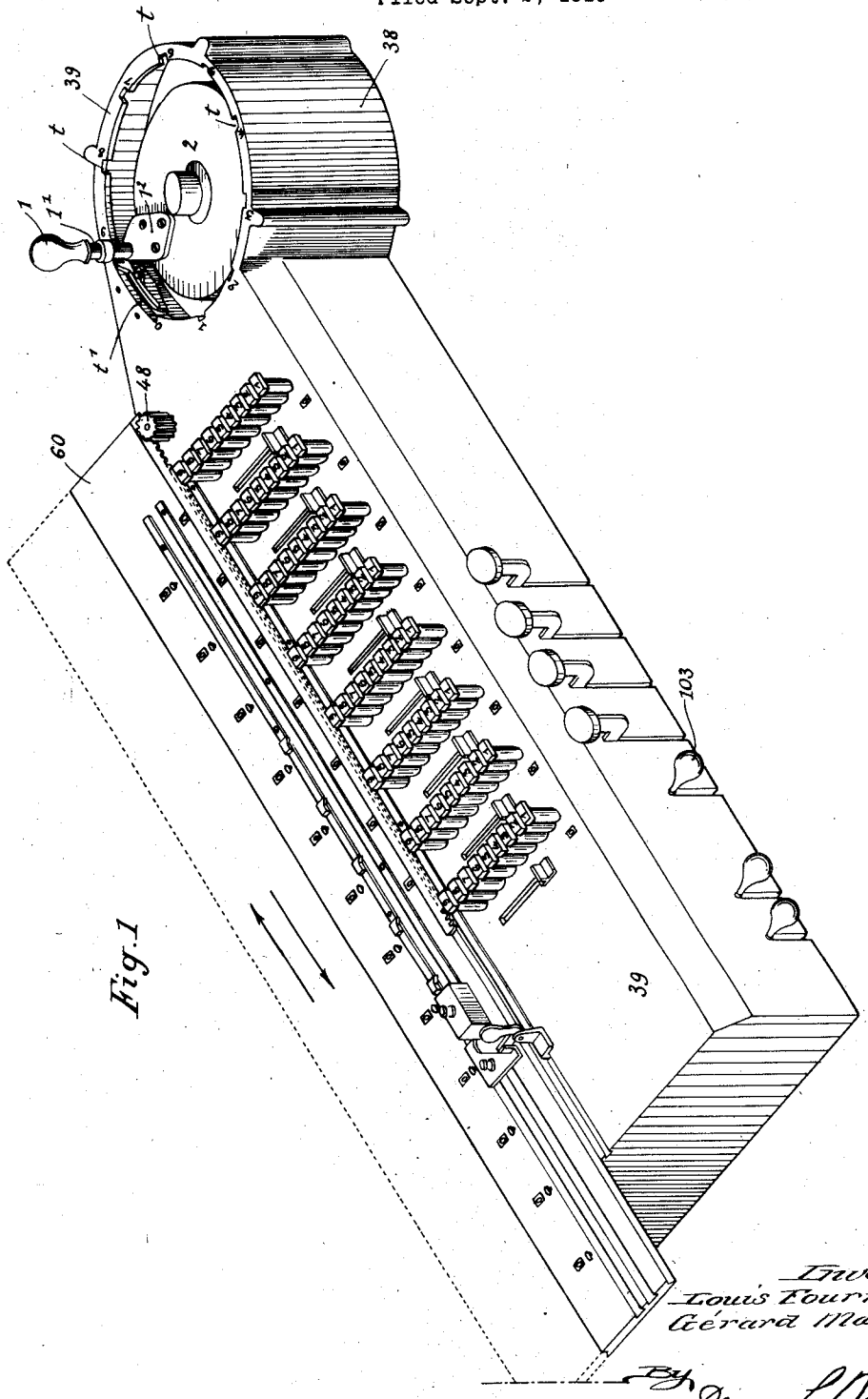

Fig. 1

Inventors
Louis Fournier
Gérard Mang.
By James L. Norris
Attorney.

April 29, 1924. 1,492,442

L. FOURNIER ET AL

COMPUTING MACHINE

Filed Sept. 2, 1919 7 Sheets-Sheet 2

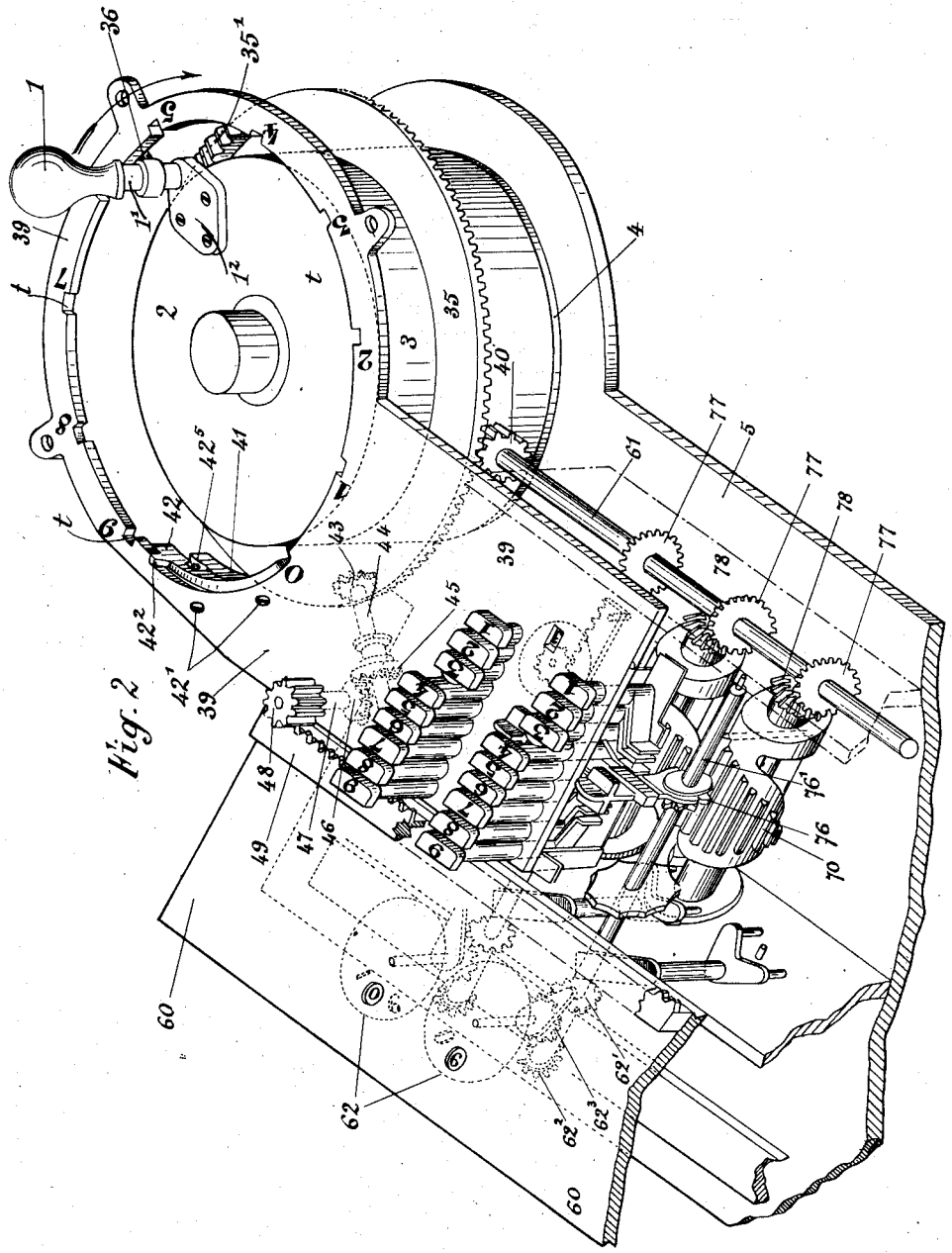

Fig. 2

Inventors
Louis Fournier
Gérard Mang,
By Charles L. Perrin,
Attorney.

April 29, 1924. 1,492,442

L. FOURNIER ET AL

COMPUTING MACHINE

Filed Sept. 2, 1919 7 Sheets-Sheet 3

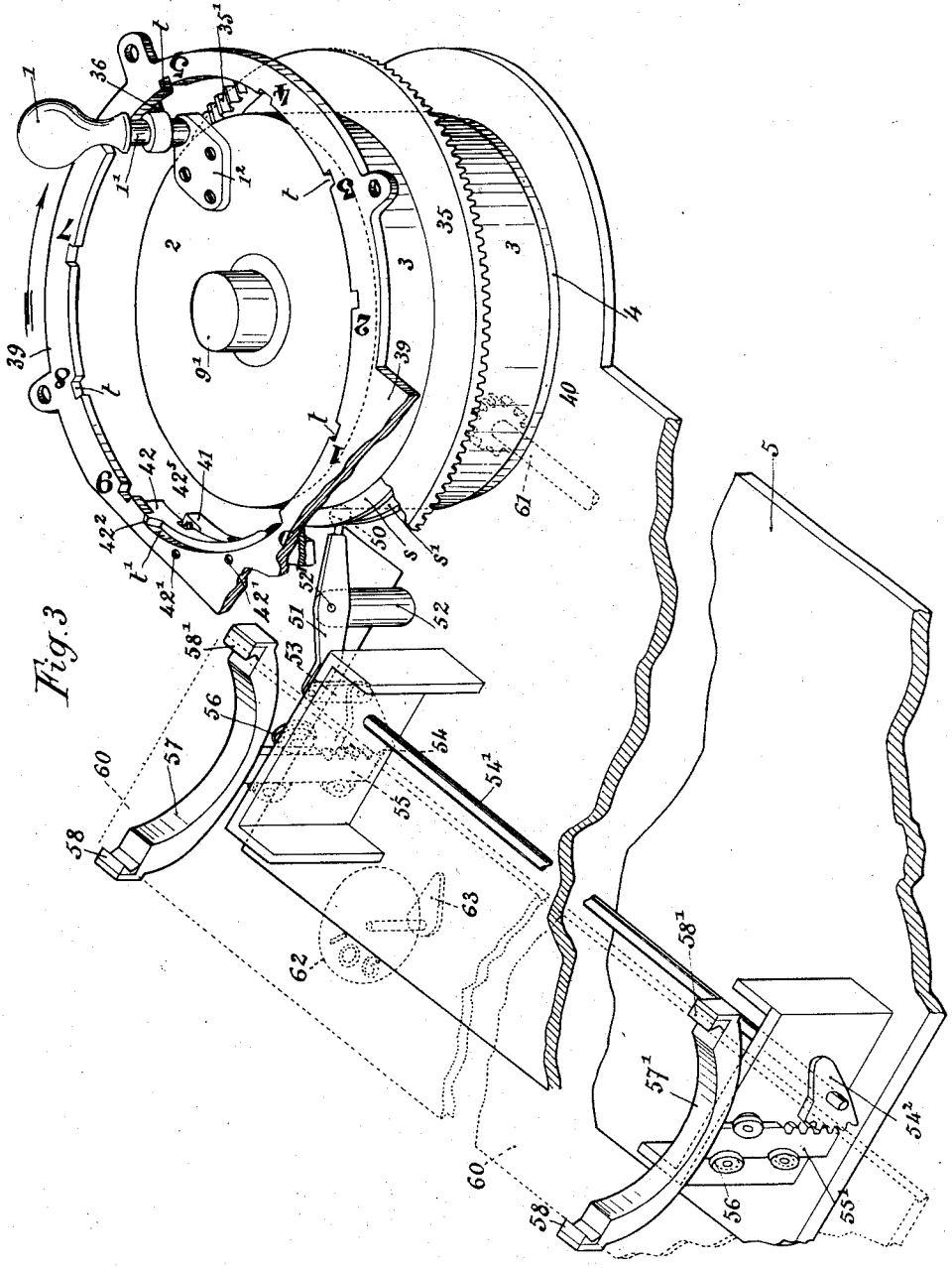

Fig. 3

Inventors
Louis Fournier
Gerard Marq,
By James L. Norris,
Attorney.

April 29, 1924. 1,492,442

L. FOURNIER ET AL

COMPUTING MACHINE

Filed Sept. 2, 1919 7 Sheets-Sheet 4

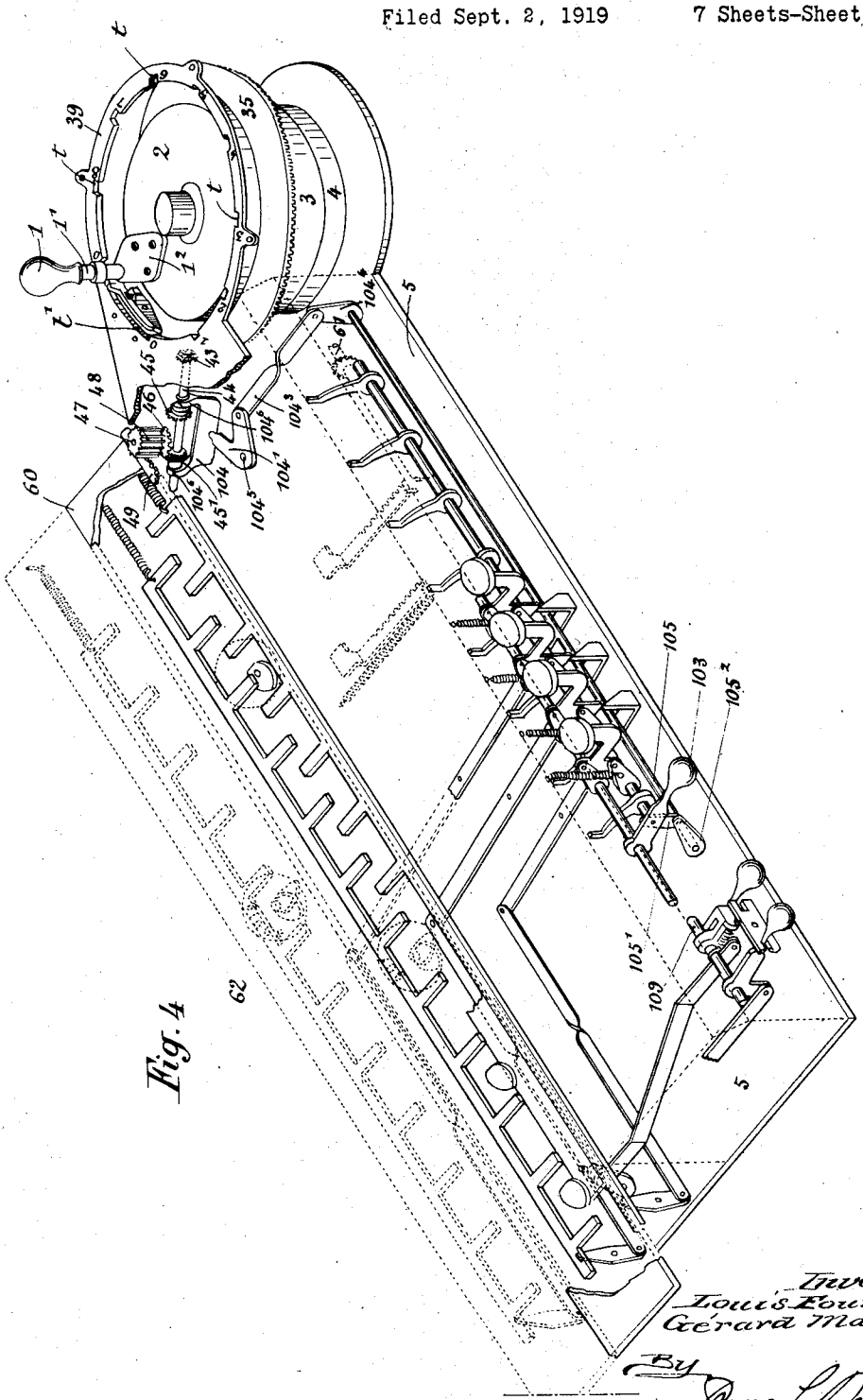

Fig. 4

Inventors
Louis Fournier
Gérard Mang,
By Amos L. Norris,
Attorney,

April 29, 1924.

1,492,442

L. FOURNIER ET AL

COMPUTING MACHINE

Filed Sept. 2, 1919 7 Sheets-Sheet 5

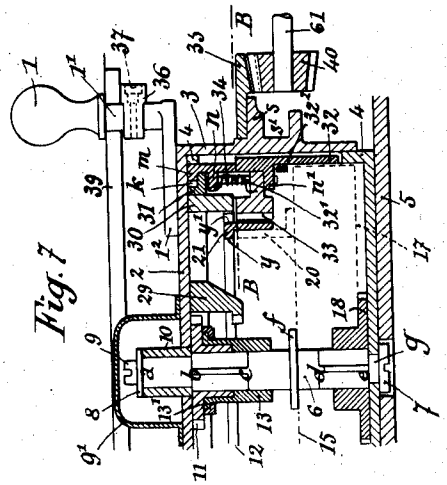

Fig. 7

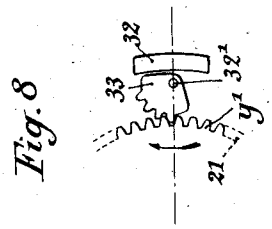

Fig. 8

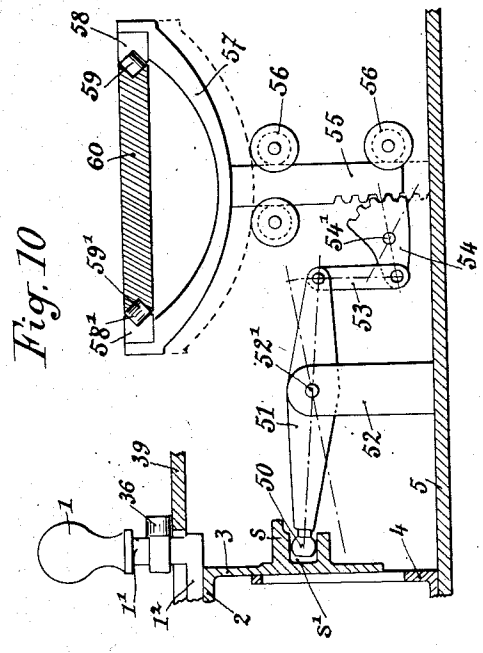

Fig. 10

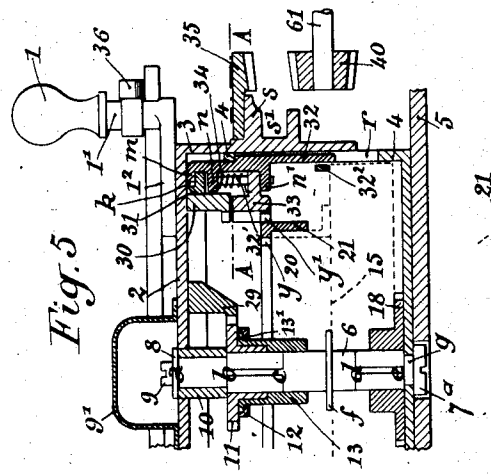

Fig. 5

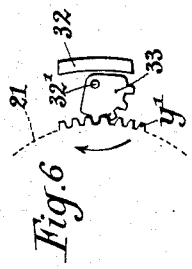

Fig. 6

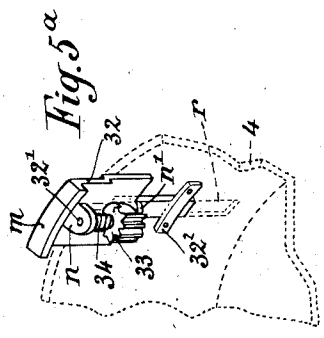

Fig. 5a

Inventors
Louis Fournier
Gerard Marg

By James L. Norris,
Attorney

April 29, 1924. 1,492,442

L. FOURNIER ET AL

COMPUTING MACHINE

Filed Sept. 2, 1919 7 Sheets-Sheet 6

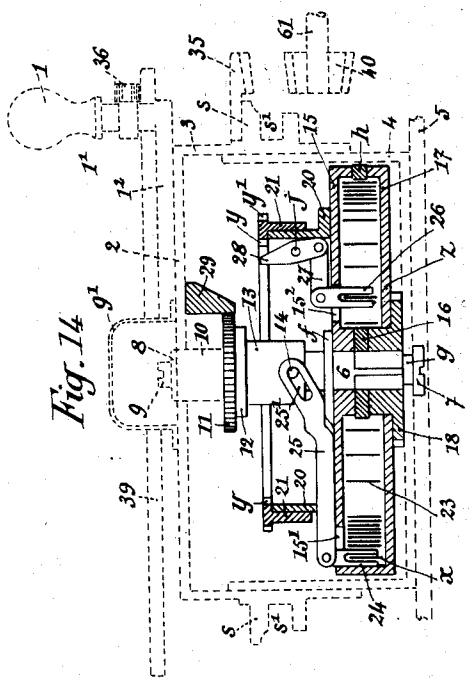

Fig. 14

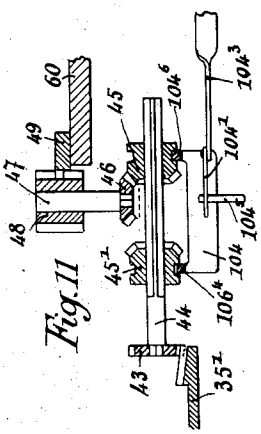

Fig. 11

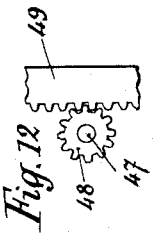

Fig. 12

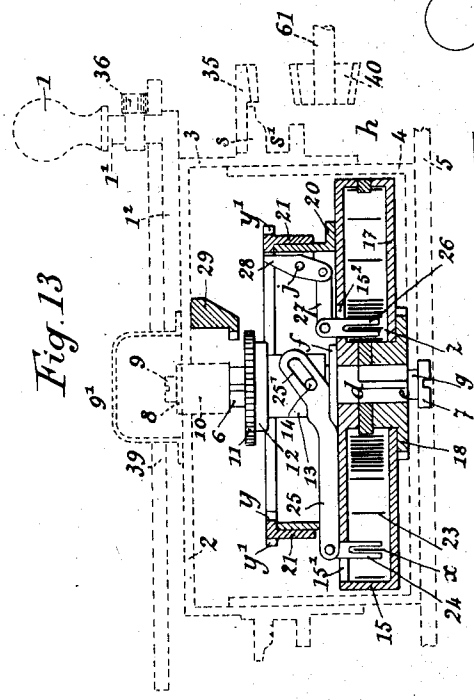

Fig. 13

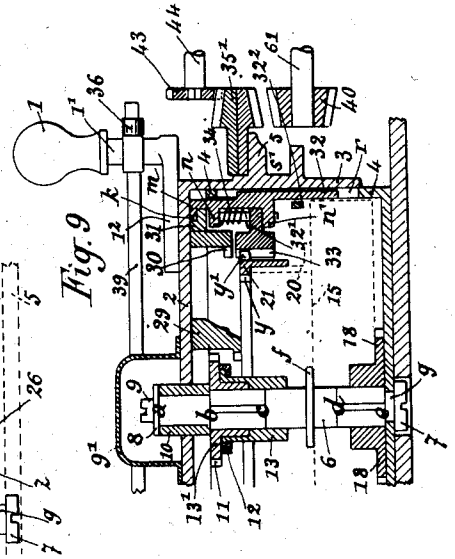

Fig. 9

Inventors
Louis Fournier
Gérard Mang,
By James L. Norris,
Attorney.

April 29, 1924. 1,492,442

L. FOURNIER ET AL

COMPUTING MACHINE

Filed Sept. 2, 1919 7 Sheets-Sheet 7

Fig. 15

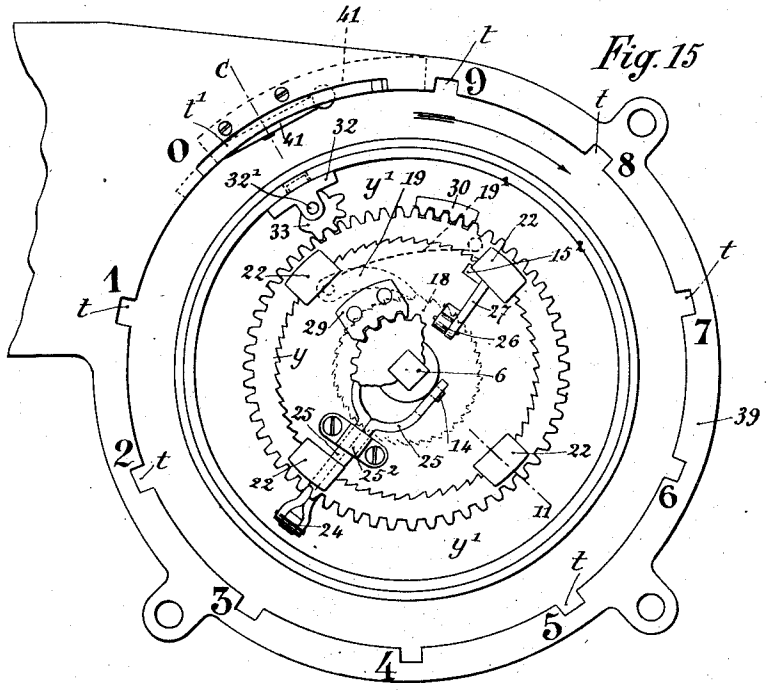

Fig. 16

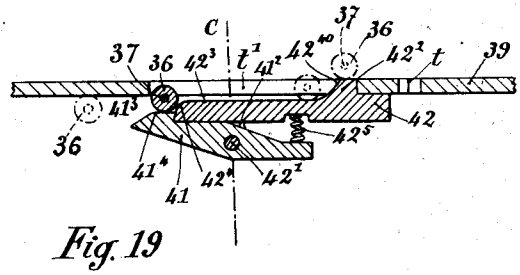

Fig. 18

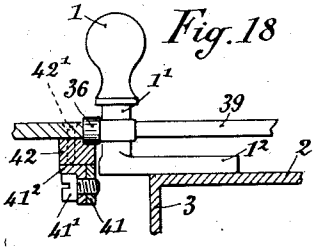

Fig. 19

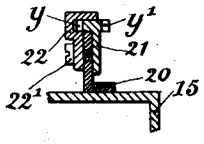

Fig. 17

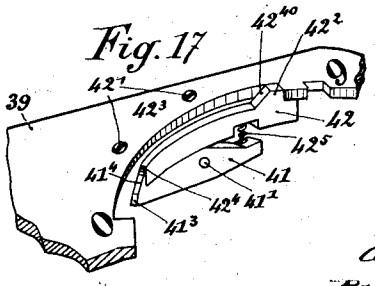

Inventors
Louis Fournier
Gerard Mang,
By James L. Norris,
Attorney.

Patented Apr. 29, 1924. 1,492,442

UNITED STATES PATENT OFFICE.

LOUIS FOURNIER AND GERARD MANG, OF PARIS, FRANCE; SAID FOURNIER ASSIGNOR TO SAID MANG.

COMPUTING MACHINE.

Application filed September 2, 1919. Serial No. 321,045.

To all whom it may concern:

Be it known that we, LOUIS FOURNIER and GERARD MANG, citizens of the French Republic, and residing at Paris, in the Department of the Seine, France, have invented new and useful Improvements in Computing Machines, of which the following is a specification.

The present invention relates to improvements in computing machines of the Thomas type.

According to the invention, the operating handle is to a certain extent subject to the action of a spring for the purpose of assisting the operator in manipulating the said handle. In order words, while the handle is performing a portion of its rotation, without acting upon the mechanism of the computing machine, it stores up energy in a spring, while when the handle actuates the said mechanism during the remainder of its rotation, it is still moved by hand, but with the assistance given to it by the energy stored up in the said spring.

The accompanying drawings illustrate, by way of example, a machine constructed in accordance with the invention.

Fig. 1 is a perspective view of the machine complete, with all its parts set at the zero position.

Fig. 2, on a larger scale, is a perspective view showing more particularly the operating handle, two of the tiers or banks of keys of the key board, two of the stepped drums 70 with the carriage 60 and base plate 5 broken away.

Fig. 3, on the same scale as Fig. 2, is a perspective view of a portion of the machine, showing more particularly the parts which act to raise and lower the carriage, the latter being outlined in dotted lines.

Fig. 4, on the same scale as Fig. 1, is a perspective view of the machine from which have been removed the keyboard, certain portions of the carriage and the number wheels, so as to more particularly show the various elements of the resetting mechanism, including the devices which control the computing operations.

Fig. 5, is a vertical section taken through the axis of the operating handle 1 and its associated parts, Fig. 1.

Fig. 5^a in perspective is a detail of Fig. 5.

Fig. 6 is a detail in section along the line A of Fig. 5.

Fig. 7 is a section similar to that of Fig. 5, with the parts in a different position.

Fig. 8 is a detail in section along the line B—B of Fig. 7.

Fig. 9 is a section similar to those of Figs. 5 and 7, with the parts in a different position.

Fig. 10 is an elevation, partly in section, showing in detail the totalizing counter carriage-raising device in its relation to the operating handle.

Fig. 11 is a detail showing a portion of the device by which the said carriage may be made to move in the one or the other direction.

Fig. 12 is a top view of a portion of Fig. 11.

Figs. 13 and 14 are sections similar to those of Figs. 5, 7 and 9, showing more particularly the barrel and winding mechanism in different positions.

Fig. 15 is a plan, partly in section, illustrating more or less diagrammatically the parts actuated by the operating handle.

Fig. 16 is a vertical longitudinal section of the device acting to elevate or switch the operating handle.

Fig. 17 is a perspective view of the parts shown in Fig. 16.

Fig. 18, in vertical section, is a detail of the handle-switching device shown in Figs. 16 and 17.

Fig. 19 is a further detail in section on the line C of Fig. 15.

The operating handle 1 (Figs. 1–4) of the machine is loose on a shaft $1'$ fastened to a base 1^2 secured to a plate 2. The latter is fixed to an outer drum 3 which fits with slight friction on an inner drum 4, the latter being screwed to a plate 5, forming the base of the machine. These two drums 3, 4 are connected together at their centre by a shaft 6 (Fig. 5) of which the upper portion *a*, *b* is cylindrical, the portion *b*, *c* square, the portion *c*, *d* cylindrical and the portion *d*, *e* square. A collar *f* divides the cylindrical portion *c*, *d* into two substantially equal parts. A small trunnion *g* which fits with slight friction in the bottom of the drum 4 terminates the shaft 6 at its lower end. A screw 7^a holds this shaft in place, without preventing it from rotating. At the top, the shaft 6 is held by a washer 8 and a screw 9 covered by a cap $9'$. A cylindrical sleeve 10 is mounted

upon the round portion *a*, *b* of the shaft 6. The square portion *b*, *c* carries a pinion 11 having a square bore and arranged in such a manner as to rotate the shaft 6, while at the same time being capable of movement up and down thereon. On the underface of the pinion 11 is fastened, by screws or otherwise, a crown 12, the bore of which is hollowed out for the purpose of receiving a collar 13′ of a sleeve 13 loosely fitted on the cylindrical portion *c*, *d* of the shaft 6, in such a manner that the sleeve follows the longitudinal sliding motion of the pinion 11, but is not revolved thereby. This sleeve is provided with diametrically opposed pins one of which only (14) is shown in Figures 13, 14, 15; this allows the shaft 6 and pinion 11 to rotate without rotating the sleeve itself; if, however, the said pins are moved vertically, they take with them the sleeve 13, the crown 12 and, finally, the pinion 11. The travel of the whole is limited at the top by the sleeve 10 and at the bottom by the collar *f* on the shaft 6, Fig. 9. Beneath this collar, the shaft 6 receives a spring barrel, consisting of a drum 15 (Figs. 13 and 14), a washer 16 having an ordinary hook not shown, for fastening to a spring 23, a counter plate 17, and a ratchet wheel 18 which is driven by the square portion *d*—*e* of the shaft 6 and retained by a pawl 19, Fig. 15, which is held by a spring 19′.

On the drum 15 of the barrel there is riveted a crown 20, Figs. 13 and 14, upon which a second crown 21, having a double set of teeth (*y* internal and *y′* external) can rotate with slight friction (Fig. 15). A number of hooks 22, Figs. 15 and 19, hold the crown 21 so that it can neither move up nor down, but is capable of rotating on the crown 20. Each hook 22 is fastened to the latter by a screw 22′ or other equivalent means.

The barrel spring 23 is coiled around the washer 16 (Figs. 13 and 14) and is fixed at its outer end to to the usual hook *h* on the inner wall of the drum 15 of the barrel.

The barrel 15 is formed with an opening 15′, Figs. 13, 14, through which passes a rider 24 acting to hold one of the outer coils *x* of the barrel spring 23. The rider 24 is fastened to one end of a lever 25, the other end of which is forked, see Fig. 15, and engages with the pins 14 through the intermediary of inclined slots 25′. The lever 25 which is adapted to slide against the barrel 15 is held in place upon the latter by a strap 25^2, Fig. 15. The object of the sliding lever 25 is to so act upon the pins 14 of the sleeve 13 as to impart to the latter as well as to the parts associated therewith a sliding motion, so that the said sleeve may be made to assume either of the two extreme positions shown in Figs. 13, 14, for the purpose hereinafter explained.

The barrel 15 is formed with another opening 15^2 (Figs. 13, 14, 15) through which passes another rider 26 acting to hold one of the inner coils *z* of the barrel spring 23. The inner rider 26 is pivoted to one end of a connecting rod 27, the other end of which is jointed to a pawl 28 pivoted at *j* to a suitable support, not shown, on the crown 20, for the purpose hereinafter explained.

Within the outer drum 3, Figs. 5, 7, 9, 13, 14, 15, there is fixed to the plate 2 an inner toothed dog 29, which can engage the teeth of the pinion 11. An outer dog 30, also fixed to the said plate 2, Figs. 5, 7, 9, 15, is adapted to engage with the outer teeth *y′* of the crown 21. To the plate 2 is also fixed a crown 31 (Figs. 5, 7, 9) in the periphery of which is formed a groove *k*. 32 (Figs. 5, 5^a, 7) is a vertically sliding member, the upper end of which is bent at right angles so as to form a projection *m* which engages freely the said groove *k*, thus establishing a mechanical connection between the parts 31 and 32 and enabling the part 32 to be raised or lowered by the motion of the part 31. On the member 32 are formed two lugs *n*, *n′* (Fig. 5, 5^a, 7, 9) into which is fitted a stud 32′. On this stud is slipped freely a toothed segment 33, subjected to the pressure of a torsional spring 34 which tends to constantly rotate the said segment clockwise into the position shown in Fig. 8.

The sliding member 32 engages an opening *r*, Fig. 5^a, formed in the drum 4 and is guided thereby during its movements; the said member is likewise guided by a fixed support 32^2 fastened in the drum 4 in any suitable manner.

On the outer drum 3 is formed an annular bracket *s*, (Figs. 3, 5, 7, 9, 10, 13, 14) on to which is fixed a toothed crown 35, (Figs. 2, 3, 4, 5) adapted to move down into gear with a pinion 40, (Figs. 2, 3) fast on a main shaft 61. From this shaft 61 are actuated, as hereinafter explained, the usual stepped drums 70, two of which only are shown in Fig. 2.

In the annular bracket *s*, (Figs. 5, 7, 9, 10, 13, 14) is formed a groove *s′*, acting to raise and lower the usual carriage 60, as hereinafter explained.

The shaft 1′ of the handle 1 is provided with a roll 36 (Figs. 5, 7, 9, 10, 13, 14, 18) revolving on an axis 37 (Fig. 16) and controlling the handle 1, as hereinafter explained.

On to the toothed crown 35 is suitably fixed a toothed sector 35′, (Figs 2, 3, 9) comprising a limited number of teeth, into which may engage, as the outer drum 3 is rotated by the handle 1, a pinion 43 on a shaft 44, the length of the said sector being sufficient to cause the said pinion to make

one revolution, as and for the purpose hereinafter explained.

The handle 1 can assume either an elevated position, as shown in Figs. 1, 4, 5, 10, 13, 14, or a fully depressed position, as shown in Figs. 2, 3 and 7. It is supported in its elevated position by the roll 36 resting upon the top plate 39 of the casing 38 (Fig. 1). In the inner periphery of the top plate 39 are formed notches, nine in number, designated by t and being provided with a numeral from 9 to 1. A tenth notch t' starting from the numeral 0 extends towards the numeral 9 and is longer than the notches t.

On turning the handle 1 clockwise by hand, the roll 36, as long as it rests upon the plate 39, keeps the handle 1 elevated, but as soon as it reaches one of the notches t, it is free to be depressed and the operator actually depresses it, should it happen that it has been brought into the position which it should reach for the multiplication by that digit. If not, the handle 1 is moved further until it is opposite the notch t provided with the right numeral, say 6, whereupon the operator depresses it and it will then be beneath the plate 39 and can be moved into the position shown in Figures 2 and 3, it being between numerals 6 and 5.

During the travel of the handle 1 from the initial position shown at numeral 9 in Figs. 1 and 4 to the selected numeral 6, during which the roll 36 rides on the plate 39, the operator stores up energy in the barrel spring 23 by winding the latter, in view of the fact that, during such travel, the inner dog 29 (Figs. 5, 14) is in engagement with the pinion 11 and actuates it, with the result that rotary motion is imparted to the shaft 6, the latter winding the said spring through the intermediary of the washer 16 which is provided with the usual hook connected to the said spring.

The spring 23 is prevented from unwinding, on the one hand, by the sector 33, (Figs. 1, 5, 5ª, 6) the teeth of which engage the external teeth y' on the crown 21, the latter being fast with the barrel 15 and, on the other hand, by the ratchet wheel 18 (Figs. 5, 15), pawl 19 and spring 19′. In this position of the parts, the pawl 28 is in engagement with the internal teeth y of the crown 21 as shown in Fig. 13, and is held from rotating. Any return motion of the shaft 6, which would have for its effect to allow the spring 23 to expand again, is checked by the ratchet wheel 18 into which engages the ratchet 19 (Fig. 15).

In this machine wherein, for the first time to the best of applicants' belief and knowledge, a spring 23 is applied for storing up, during a part of the manipulation of the operating handle, energy intended to be utilized in assisting the hand of the operator during another part of the said manipulation, provision is made for automatically throwing out of action the mechanism for winding the said spring the moment the latter has been wound to a given maximum and for also automatically putting the said mechanism into action the moment the spring has been unwound up to a given point. This result is achieved by the hereintofore described construction illustrated in Figures 13 and 14 and essentially composed of the two riders 24, 26. The characteristic feature of these members 24, 26 resides in that they are mounted upon the barrel spring 23 and that they consequently follow the displacements of the latter while it is being wound and unwound. The movements thereby imparted to these members can therefore be turned to account for automatically putting into and out of action the mechanism which acts to wind the spring.

This construction will be readily understood from Figures 13 and 14, wherein the barrel spring 23 is assumed to have been wound and unwound, respectively. In the case of Figure 13, the rider 24 astride one of the outer coils x of the spring has been caused to move inwardly towards the shaft 6, with this result that the lever 25, being carried along thereby, causes the sleeve 13 to be moved downwardly and disengages the pinion 11 from the dog 29, so that no further movement is imparted to the shaft 6 and no further winding of the spring 23 takes place, whilst on the other hand the rider 26 astride one of the inner coils z of the spring has been caused to also move inwardly towards the shaft 6, with the result that the connecting rod 27 carried along thereby has tilted the pawl 28 into engagement with the inner teeth y of the crown 21, so that the barrel 15 is locked and its spring 23 is free to exert the power stored therein for the purpose of assisting the operator in manipulating the handle 1 through a portion of its circular clockwise movement.

In Figure 14, the positions of the riders 24, 26 are reversed and contrary effects are obviously produced.

On the handle 1 being depressed by the operator, from the position shown in Figure 5 and brought into that shown in Figure 7, the dog 29 disengages from the pinion 11, so that no further action upon the spring 23 can be exercised by the handle in winding the said spring.

At the same time, the outer drum 3 being carried along by the plate 2 on which the handle 1 is fixed, the sliding member 32 (Fig. 5ª) is moved downward, carrying with it the toothed sector 33, with the result that the latter disengages from the external teeth y' on the crown 21. As soon as the said sector is free, it is acted on by its spring 34 and is returned, in the direction of the arrow, from the position shown in Fig. 6

to that shown in Fig. 8. The crown 21 being released, the barrel 15 is free to exercise or rather restitute the power stored up in its spring 23 and to aid the operator in further actuating the handle 1, so that the power applied by him in further moving the handle is decreased accordingly and practically reduced to a minimum.

The operator then continues to rotate the handle 1 from the position shown in Figures 2 and 3 until it reaches its starting point shown in Figs. 1 and 4. In so doing, the toothed crown 35 engages the pinion 40 on the shaft 61, Figs. 2, 3, 7, for the purpose of actuating the stepped drums 70, as hereinafter explained. Furthermore, the groove s' in the bracket s, in passing from the position shown in Fig. 5 to that shown in Fig. 7, acts on the carriage 60, for the purpose of raising it by the mechanism shown in Fig. 10 and hereinafter explained. Again, as the crown 35 revolves and when it is in its upward position, the toothed sector 35′ (Figs. 2, 3, 9, 11) carried thereby comes into engagement with the pinion 43 to which it imparts one revolution, for the purpose of actuating the carriage 60, as hereinafter explained.

In the groove s' (Figs. 3 and 10) fits a roller 50 on the end of a lever 51 pivoted at 52′ on a standard 52 and connected by a link 53 to a toothed sector 54 fast on a shaft 54′. The latter carries a second sector 54^2 (Fig. 3) and the two sectors 54, 54^2 engage racks 55, 55′ guided by rollers 56 and each provided with a cradle 57, 57′. The carriage 60 is fitted with a slight play in guides 58, 58′ with the interposition of rollers 59, 59′, for the purpose of rendering the motion of the carriage free and easy. It will thus be seen that, by means of the arrangement just described, the totalizing counter carriage 60 is positively controlled, as to its vertical movements, by the vertical movements of the handle 1, as hereinafter explained.

The carriage 60 is arranged so as to be capable of being moved either one way or the other or of being rendered inoperative, all by the control of a knob 103, (Figs. 1 and 4). The said knob, loose on a shaft 109 (Fig. 4) is provided with a link 105′ pivoted to an arm 105^2 fast on one end of a shaft 105, the other end of which carries an arm 104^4 connected by a link 104^3 to a bell-crank lever 104′ pivoted at 104^5. The lever 104′ is connected to a sliding fork-carrier 104, provided with two forks 104^6 (Figs. 4, 11) engaging two bevel wheels 45, 45′ splined on the shaft 44 which carries the bevel pinion 43. The latter engages the toothed sector 35′, as hereinbefore explained (see Fig. 2). Either one of the bevel wheels 45, 45′ may engage a bevel wheel 46, Figs. 4 and 11, fast on a shaft 47 carrying a long pinion 48 gearing into a rack 49 fastened to the carriage 60.

It will thus be seen that if the knob 103 be placed in its uppermost position, Fig. 1, it will cause the carriage 60 to have imparted to it, through the intermediary of the sector 35′ and pinion 43 on shaft 44 (Figs. 2 and 4), a movement in one direction (shown by the top arrow in Fig. 1) and that if placed in its lowermost position, it will cause the carriage to be moved in the reverse direction (shown by the bottom arrow of Fig. 1), while if it be placed in an intermediary position, no motion will be imparted to the carriage, because neither pinion 45 or 45′ is in gear with the pinion 46. Any suitable device such as a spring catch not shown, may be used for holding the knob 103 in any one of its three positions.

It is to be observed here that neither of the usual pinions 62′, 62^2, (Fig. 2) which actuate the number wheels 62 (usual in the Thomas type of machine) must be in mesh with the pinion 62^3 while the carriage 60 is being shifted in one or the other direction, as otherwise the said number wheels 62 would be operated on uselessly during the said shifting movement. The object of raising the carriage 60 is to prevent such actuation from taking place, it being understood that, when the carriage is fully lowered, see the position of the parts illustrated in Figures 2, 3, and 7, the toothed crown 35 engages the pinion 40, so that the main shaft 61 is driven, with the result that the number wheels 62 are acted on through the intermediary of bevel wheels 77, 78 (Fig. 2), shafts 69, stepped drums 70, movable setting pinions 76, shafts 76′, pinions 62′ or 62^2 and pinion 62^3, while when the carriage is raised, see the position of the parts illustrated in Figures 5, 10, 13, 14, the toothed crown 35 is disengaged from the pinion 40, so that the said main shaft 61 is no longer driven, with the result that the said number wheels 62 are not acted upon. It is also to be observed that the aforementioned results are produced automatically as the operator revolves the handle 1.

The handle 1 having been operated on and having been fully depressed and moved away from the position shown in Figures 2, 3, acts, as hereinbefore described, upon the shaft 61 which operates the above described stepped drums 70 and also upon the shaft 44 which operates the carriage 60 and, after having performed these functions, the said handle requires to be raised again and restored to its initial position shown in Figs. 1 and 4, so that its roller 36 may once more rest upon the top plate 39 of the casing 38. This raising motion is automatically effected by a switching device shown generally in Figs. 1

to 4, 15, and in detail in Figs. 16, 17, 18; it is effected in three successive steps or stages.

This device is essentially composed of a movable switch 41 shown in longitudinal section in Fig. 16 and in perspective in Fig. 17; it is pivoted on a stud or screw 41′ passing through a support 41^2 (Fig. 18) suitably fixed to the plate 39, and is formed with an incline 41^3 and a substantially horizontal surface 41^4. It is also composed of a guide-piece 42 fixed by screws 42′ to the under face of the plate 39, and provided with a projection 42^2 abutting against one of the extreme walls of the notch t^1, the said guide-piece comprising a substantially horizontal surface 42^3 and an incline 42^4. Between the parts 41 and 42 is interposed a spring 42^5 acting to keep them in their normal position shown.

As the handle 1, still depressed, is about to reach its starting position shown in Figures 1 and 4, its roll 36 first meets the incline 41^3 on the switch 41 and is made to ride up the same, while at the same time causing the switch 41 to yield until the roll 36 meets the horizontal surface 41^4, whereupon the switch, under the action of its spring 42^5, causes the roll to be raised into the position shown in full lines in Figure 16. The handle is thus raised one step. Simultaneously with this partial elevation of the handle, the carriage 60 is likewise raised one step, by the mechanism illustrated and already described with reference to Figure 10. On the operator continuing to move the handle 1, its roll 36 rises another step into the dotted position shown in Figure 16, the roll resting at the right of the horizontal surface 42^3 of the guide-piece 42. Simultaneously with this second elevation of the handle, the carriage 60 is likewise raised another step by the mechanism hereinbefore referred to. Finally, the roll rides up the incline 42^4 and is raised a third step into its starting position, Fig. 1, while at the same time the carriage 60 is correspondingly raised. The carriage is now raised and restored to its normal position illustrated in Figure 10. And it may be here observed that, in view of the carriage-actuating pinion 48, (Figs. 1, 2, 4, 11) being long as compared with the thickness of the rack 49 engaging therewith, the said pinion is at all times in engagement with the said rack, whatever may be the position at which the carriage 60 may be brought in consequence of the descending and rising movements of the handle 1.

At the same time as the roll 36 of the handle 1 is raised a second step, i. e., on to the horizontal surface 42^3 of the guide-piece 42, the outer drum 3 (Fig. 2) is correspondingly raised and carries with it the toothed sector 35′ which is then caused to engage the pinion 43, the engagement lasting as long as the said roll 36 travels on the said surface 42^3, with the result that the shaft 44 is revolved and that the carriage 60 is moved horizontally either in one or the other direction if one of the pinions 45, 45′ is in gear with the pinion 46 (Fig. 11) while no motion is imparted to the carriage if neither of the said pinions 45, 45′ is in gear with 46 as already explained.

When once the roll 36 of the handle 1 has left the surface 42^3 of the guide-piece 42, it returns to its uppermost position (Fig. 1) wherein it rests upon the plate 39 and at such time the toothed sector 35′, having abandoned the pinion 43, has been raised, so that no further motion is imparted to the carriage 60 until the said sector again engages the said pinion.

The extent of motion of the carriage 60 in one direction or the other is sufficient to move it the extent of one denomination.

At the same time as the handle 1 is elevated by passing from the position shown in Figure 7 to that shown in Fig. 5, the toothed inner dog 29, which had been disengaged from the pinion 11, is re-engaged therewith, so that the handle is again geared with the winding shaft 6 of the barrel spring 23 and the further winding of the latter can be effected by the said handle during a portion of its revolution, as hereinbefore described, provided that the barrel spring has not already been wound to a maximum, in which case the parts assume the position shown in Fig. 13 and no further winding action takes place. Furthermore, on the handle 1 being elevated, the said dog 30 disengages the crown 21, so that the spring barrel 15, is freed, but the latter is checked by the movable segment 33 engaging the said crown 21, Fig. 6.

We claim:

1. In a machine of the class described, the combination of calculating mechanism, an operating handle, said handle being capable of being raised and lowered, a spring interposed between said handle and the calculating mechanism, the rotation of said handle in its raised position acting to tension said spring and means actuated on the depression of said handle to discontinue the tensioning of said spring, and to cause said spring to assist in the rotation of said handle.

2. In a machine of the class described, the combination of calculating mechanism, an operating handle, said handle being adapted to be rotated and to be moved up and down, means for transmitting the rotary movement of the handle to the carriage of said calculating mechanism and means for causing the carriage to move up and down according as said handle is lowered and raised respectively.

3. In a machine of the class described, the

combination of calculating mechanism, an operating handle, said handle being adapted to be rotated and moved up and down, means for transmitting the rotary movement of the handle to the carriage of the calculating mechanism and means for causing said carriage to move up and down according as said handle is lowered and raised respectively.

4. In a machine of the class described, the combination of an operating handle, a drum on which said handle is mounted, a second drum carrying said first drum which latter can rotate and slide up and down thereon, a shaft mounted in said second drum, a spring connected to said shaft, means actuated by said handle to rotate said shaft to tension said spring and means actuated by depression of said handle to discontinue tensioning of said spring.

5. In a machine of the class described, the combination of an operating handle, a drum on which said handle is mounted a second drum carrying said first drum which latter can rotate and move up and down thereon, a shaft mounted on said second drum, a spring connected to said shaft, a pinion slidably but non-rotatably mounted on said shaft and a dog on said first drum adapted to engage said pinion to rotate it and said shaft.

6. In a machine of the class described, the combination of an operating handle, a drum on which said handle is mounted, a second drum carrying said first drum which latter can rotate and move up and down thereon, a shaft mounted in said second drum, a spring connected to said shaft, a pinion slidably but non-rotatably mounted on said shaft, a dog on said first drum adapted to engage said pinion to rotate it and said shaft, and means actuated by the tension of said spring to disengage said dog from said pinion.

7. In a machine of the class described, the combination of an operating handle, a drum on which said handle is mounted, a second drum carrying said first drum which latter can rotate and move up and down thereon, a shaft mounted in said second drum, a spring connected to said shaft, a pinion slidably but non-rotatably mounted on said shaft, a dog on said first drum adapted to engage said pinion to rotate it and said shaft, a rider carried by said spring, and means actuated by said rider for disconnecting said dog from said pinion.

8. In a machine of the class described, the combination of an operating handle, a drum on which said handle is mounted, a second drum carrying said first drum which latter can rotate and move up and down thereon, a shaft mounted in said second drum, a barrel mounted on said shaft, a spring mounted in said barrel and having one end connected to said shaft and one end to said barrel, a pinion mounted on said shaft so as to slide thereon but to rotate therewith, a dog on said first drum adapted to engage said pinion to rotate it, a rider on said spring, said rider being actuated by the tension of said spring to move said dog out of engagement with said pinion, a toothed crown on said barrel, a pawl adapted to engage said crown, a second rider on said spring actuated by the tension of the spring to engage and disengage said pawl from said toothed crown.

9. In a machine of the class described, the combination of an operating handle, a drum on which said handle is mounted, a second drum carrying said first drum which latter can rotate and move up and down thereon, a shaft mounted in said second drum, a barrel mounted on said shaft, a spring mounted in said barrel and having one end attached thereto and one end to said shaft, a pinion mounted on said shaft to rotate therewith, a dog on said first drum adapted to engage said pinion to rotate it, a toothed crown on said barrel, a toothed segment normally engaging said toothed crown, an outer dog on said drum adapted, on depression of the handle to disengage said toothed segment from said crown and to engage therewith itself, said depression of the handle also causing said inner dog to disengage from said pinion.

10. In a machine of the class described, the combination of an operating handle, a drum on which said handle is mounted, a second drum carrying said first drum which latter can rotate and move up and down thereon, a roller fitted on said handle, a plate on which said roller runs, said plate having a plurality of notches through which said roller can pass, a shaft mounted in said second drum, a spring connected to said shaft, said handle being adapted when above said plate to wind up said spring and when below said plate to be actuated by said spring.

11. In a machine of the class described, the combination of an operating handle, a drum on which said handle is mounted, a second drum carrying said first drum, which latter can rotate and move up and down thereon, a roller fitted on said handle, a plate on which said roller runs, said plate having a plurality of notches through which said roller can pass, a member carried by said first drum and means actuated by said member for raising and lowering the carriage of the calculating mechanism during the lowering and raising of said handle respectively.

12. In a machine of the class described, the combination with calculating mechanism, of an operating handle, a plate upon which said handle rotates, said plate having notches, corresponding to the digits, through which said handle can be depressed and a

toothed sector carried by and rotated by said handle, said sector engaging the actuating means for the carriage of the calculating mechanism when the handle is depressed.

13. In a machine of the class described, the combination with calculating mechanism, of an operating handle, a plate upon which said handle rotates, said plate having notches through which said handle can be depressed, a toothed sector carried by and rotated by said handle, said sector engaging the actuating means for the carriage of the calculating mechanism and means for reversing the direction of motion of said carriage.

14. In a machine of the class described, the combination with calculating mechanism of an operating handle, a plate upon which said handle can rotate, said plate having notches, corresponding to digits, through which said handle can be depressed, and means for automatically raising said handle to its original position at the end of each revolution.

15. In a machine of the class described, the combination with calculating mechanism, of an operating handle, a plate upon which said handle can rotate, said plate having notches corresponding to numbers 1 to 9, through which said handle can be depressed, said plate having a longer tenth notch through which the handle is raised to its original position at the end of each revolution.

16. In a machine of the class described, the combination with calculating mechanism, of an operating handle, a plate upon which said handle can rotate, said plate having notches corresponding to numbers 1 to 9, through which said handle can be depressed, said plate also having a longer tenth notch, and a cam-surface located under said tenth notch and adapted to raise said handle to its original position.

17. In a machine of the class described, the combination with calculating mechanism, of an operating handle, a plate upon which said handle can rotate, said plate having notches corresponding to numbers 1 to 9, through which said handle can be depressed, said plate also having a longer tenth notch, a three-stepped cam-surface located beneath said tenth notch, said cam-surface consisting of two parts yieldingly held together and adapted to return said handle to its original position.

LOUIS FOURNIER.
GERARD MANG.

Witnesses:
JOHN F. SIMONS,
A. V. DAVIES.