(19) Europäisches Patentamt
European Patent Office
Office européen des brevets

(11) Publication number: **0 109 109**
A2

(12) EUROPEAN PATENT APPLICATION

(21) Application number: **83201501.0**

(22) Date of filing: **18.10.83**

(51) Int. Cl.³: **C 10 J 3/46**, C 10 J 3/84

(30) Priority: **11.11.82 GB 8232282**

(43) Date of publication of application: **23.05.84**
Bulletin 84/21

(84) Designated Contracting States: **BE DE FR GB IT NL**

(71) Applicant: **SHELL INTERNATIONALE RESEARCH MAATSCHAPPIJ B.V., Carel van Bylandtlaan 30, NL-2596 HR Den Haag (NL)**

(72) Inventor: **Engelhard, Wilhelmus F. J. M., Badhuisweg 3, NL-1031 CM Amsterdam (NL)**

(74) Representative: **Puister, Antonius Tonnis, Mr. et al, P.O. Box 302, NL-2501 CH The Hague (NL)**

(54) Process for the partial combustion of solid fuel with fly ash recycle.

(57) In a process for the partical combustion of finely divided solid fuel, fly ash entrained by the formed product gas is recirculated to the combustion space. The fly ash is thereto separated from the product gas, mixed with fresh solid fuel, brought together with the fresh solid fuel in a fluidized state by injecting a gaseous medium and recirculated to the combustion space.

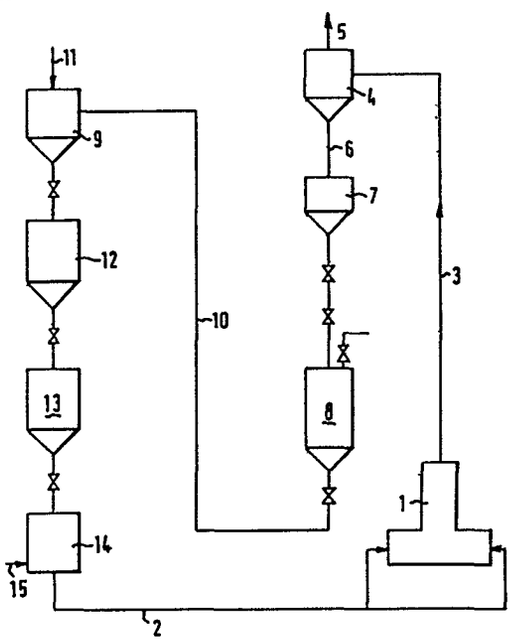

EP 0 109 109 A2

0109109

K 5661

PROCESS FOR THE PARTIAL COMBUSTION OF SOLID FUEL WITH FLY ASH RECYCLE

The present invention relates to a process for the partial combustion of a finely divided solid fuel, and more particularly to such a process wherein the generated fly ash is recirculated to the combustion space.

In a well known process for the partial combustion - also called gasification - of solid fuel, such as coal and similar carbonaceous substances, finely divided solid fuel is passed into a gasifier at a relatively high pressure. In the gasifier a hot flame is maintained in which the solid fuel reacts with oxygen, supplied as pure oxygen or an oxygen-containing gas, such as air. The solid fuel contains as useful components mainly carbon and hydrogen, which react with the oxygen to form a product gas mainly consisting of coal monoxide and hydrogen.

Apart from carbon and hydrogen, mineral fuel such as coal always contains certain quantities of inorganic, incombustible matter, which is in the combustion process partly collected in the bottom part of the gasifier as slag and partly entrained with the product gas. Depending on the type of fuel and the conditions during the combustion process the product gas may further contain particulates consisting of unconverted coal. The total mass of incombustible matter and unconverted coal entrained with the product gas is normally indicated with the expression fly ash.

For working up or usage of the product gas obtained with the partial combustion of solid fuel, the presence of fly ash in the product gas forms a disadvantage. It is therefore necessary to separate the fly ash from the product gas prior to working up or usage thereof. Various types of equipment are known for

separating the fly ash from the product gas, to obtain clean product gas and solid fly ash. The obtained separated solid fly ash, however, has some unfavourable properties. Firstly, fly ash consists of very fine, porous particles - with sizes in the range of $5\text{-}60.10^{-6}$ - having a low bulk density, making storage thereof very inefficient. Secondly, fly ash normally contains salts of metals, which may leach from the porous fly ash particles, if contacted with water. This aspect makes it inappropriate to dump fly ash on a refuse dumping ground, as the bottom thereof might be inadmissably polluted due to such leaching. For storing fly ash it is thereof necessary to use specially constructed, expensive storage spaces. It should further be noted that fly ash normally contains a valuable portion in the form of unconverted coal, which is in fact thrown away if fly ash is merely dumped.

The object of the present invention is to overcome the above disadvantages associated with the handling of fly ash, and to make use of the valuable portion in the fly ash in an effective manner.

The process for the partial combustion of a finely divided solid fuel with fly ash recycle comprises according to the invention contacting finely divided solid fuel with oxygen in a hot flame in a reactor for partial combustion thereof, withdrawing product gas containing fly ash particles from the reactor, separating the fly ash particles from the product gas, mixing the separated fly ash particles with finely divided solid fuel, forming a fluidized mass of fly ash particles and solid fuel by introducing a gaseous medium therein and transporting the fluidized mass with the gaseous medium to the reactor for partial combustion thereof.

The above process according to the invention offers a plurality of advantages over known techniques for fly ash handling. Firstly, by recirculating the fly ash to the reactor, the valuable portion thereof, i.e. unconverted coal, can be

converted into product gas, resulting in a better gasification efficiency. Secondly, recirculation of the fly ash to the reactor has a further effect in that at least a portion of the fly ash will be converted into environmentally more acceptable slag, which can be withdrawn from the bottom part of the reactor.

Thirdly, the fly ash is recycled to the reactor together with solid fuel requiring only a relatively small quantity of carrier gas. Pneumatic transport of merely fly ash through a pipeline system is rather difficult, for two major reasons. The very light and small particles forming the fly ash as well as the rather sticky nature of fly ash easily cause clogging of the valves and other parts of a pipeline system. Pneumatic transport of fly ash is therefore only feasible when extremely large amounts of carrier gas are used. The introduction of such huge amounts of carrier gas into the reactor, will have an adverse influence on the combustion process in the reactor, resulting in a less valuable gasification product and in a less effective use of the solid fuel. It has now been found that the total quantity of carrier gas, necessary for transporting the fly ash to the reactor can be considerably reduced by intensively mixing the fly ash with fresh solid fuel prior to further transport to the reactor. It has further been found that, if the fly ash forms about 30 per cent by weight at most of the mixture of fly ash and solid fuel, the total required amount of carrier gas for transporting a mixture of fly ash and solid fuel can be kept substantially equal to the amount of carrier gas necessary for transporting solid fuel only.

The invention will now be described by way of example only in more detail with reference to the accompanying drawings, in which

Figure 1 shows a first flow scheme for a process for partial combustion of solid fuel with fly ash recycle according to the invention; and

Figure 2 shows an alternative of the flow scheme shown in Figure 1.

It will be appreciated that identical elements shown in the drawings have been indicated with the same reference numeral.

Reference is now made to the first flow scheme shown in Figure 1. For the generation of product gas by partial combustion of a carbonaceous solid fuel, finely divided solids of the feed material employed is passed together with carrier gas through line 2 towards a reactor 1. The solid fuel is introduced into the reactor 1 via a plurality of burners (not shown), through which simultaneously combustion air or another oxygen source is supplied to the fuel for partial combustion thereof. In the reactor 1 the finely divided solids are converted into product gas, ash and slag. The slag is collected in the bottom part of the reactor vessel and can be withdrawn therefrom via known, not shown, withdrawal systems. The product gas with entrained fly ash is recovered over the top of the reactor 1 and is caused to flow through line 3 towards separating means for removing the fly ash from the product gas. In the shown process scheme these separating means consists of a cyclone 4, into which product gas is tangentially introduced to bring the gas into a swirling motion. This swirl motion causes a separation of product gas, leaving the cyclone over the top via line 5 and fly ash, removed from the bottom part of the cyclone through line 6.

The fly ash is subsequently collected in a storage vessel 7 arranged below cyclone 4, and from there sluiced out to a further vessel 8. This vessel 8 is provided with (not shown) means, for (de)pressurization and for separating entrained gas from the fly ash, for example by aerating or fluidizing the mass of fly ash. The gas separation is essential in order to make sure that no water vapour, which might cause corrosion problems, will condense. The vessel 8 is further provided with a cooling jacket for cooling down the fly ash. When the desired temperature and pressure have been reached and entrained gas has been sufficiently removed from the fly ash, the fly ash is sluiced out from vessel 8 via line 10 to a mixing vessel 9, provided

with mixing means, such as a stirring device. In the mixing vessel 9 the fly ash particles are mixed with solid fuel introduced via line 11. The so formed mixture of fly ash particles and solid fuel is subsequently stored in a storage vessel 12. From said storage vessel 12 the mixture is introduced into a further vessel 13 provided with (de)pressurizing means.

After the mixture has been brought at the reactor pressure, the solid fuel/fly ash mass is sluiced out from said vessel 13 and introduced into a fluidization vessel 14. For further transport of the solid fuel and fly ash, the mixture is fluidized in said fluidization vessel 14 by introducing a gaseous medium in the bottom part of the vessel via injection line 15. The fluidized mixture of solid fuel and fly ash is subsequently allowed to flow with the gaseous medium to the reactor 1 via line 2 for partial combustion thereof. Tests have been carried out to investigate how fly ash-coal mixtures would fluidize at several fly ash/coal ratios. It has been found that depending on the type of solid fuel sufficient fluidization of the solid fuel with fly ash can be obtained at a quantity of fly ash of about 30 per cent by weight of the total amount of solid fuel and fly ash in the fluidization vessel 14. In these tests the solid fuel consisted of particles having an average size of about 50.10^{-6} m, i.e. the normal size of solids for gasification in a reactor by means of solid fuel burners.

The fluidization of pure fly ash is hardly possible due to the sticky nature of fly ash. When gas is introduced into a bed consisting merely of fly ash, channels will be formed in the fly ash bed, through which the gas will escape without causing a significant suspension of the fly ash particles in the gas flow. This phenomenon can be explained from the fact that fly ash particles easily stick together so that they could only be brought into a suspended condition at excessive gas supplies. When the fly ash particles are mixed with fuel solids, the risk of sticking together of the fly ash particles is considerably

reduced, especially if a weight ratio fly ash:fuel solids of maximal 30:70 is chosen. In this case the fly ash particles will substantially behave like the fresh fuel solids, and as a consequence thereof the mixture of fly ash and solid fuel can be easily fluidized. The quantity of gas necessary for fluidizing a mixture of fly ash and solid fuel, is substantially the same as the quantity of gas necessary for fluidizing pure solid fuel. The so formed homogeneous mass of solid fuel and fly ash is subsequently allowed to flow via line 2 towards the reactor 1.

In the reactor the solid fuel as well as the fly ash are contacted with oxygen in a hot flame causing a conversion of the solid fuel in valuable product gas, fly ash and slag and a conversion of a least part of the fly ash in product gas and slag. As a result thereof the total amount of fly ash which circulates in the process with the shown flow scheme will remain substantially constant. The reactivity of a solid fuel/fly ash mixture is less than that of pure solid fuel, since such a mixture contains fewer volatiles, less oxygen and more ash. This drawback is, however, balanced by the reduced heat loss through the reactor wall when operating on solid fuel and fly ash. Experiments have shown that the gasification performance of a coal/fly ash mixture, in terms of carbon conversion, thermal efficiency, oxygen requirement for gas production was very much comparable to that of pure coal. Since the recycled fly ash contains unconverted carbon, which is at least partly converted into product gas, the proposed process results in a lower total solid fuel consumption. A reduction of the solid fuel consumption of about 5 per cent by weight for the same gas production can be attained.

During gasification of a solid fuel/fly ash mixture, more slag will be formed than when gasifying pure solid fuel. Care should therefore be taken that the system for withdrawing the slag from the reactor bottom should be adapted to such a greater slag formation.

The amount of fly ash produced in the reactor 1 depends on the type of fuel which is gasified and on the operating conditions in the reactor. When using coal as solid fuel, the amount of fly ash produced will be normally far below 30 per cent by weight of the coal, or in other words far below the upper limit for preparing a sufficiently fluidized mixture of coal and fly ash in the fluidization vessel 14.

If solid fuels generating more than 30 per cent by weight fly ash are to be processed, steps are to be taken to reduce the amount of fly ash in the fluidization vessel 14 to maintain a proper fly ash/solid fuel ratio necessary for fluidization of the solid fuel/fly ash mixture. A possible solution might be for example increasing the throughput of fresh solid fuel either or not in combination with intermittently processing solid fuel with a low fly ash production for diminishing the surplus of fly ash obtained from the solid fuel with high fly ash production.

It should be noted that the composition of the formed fly ash can be examined for example by sampling the flow through line 10, to determine the amount of oxygen necessary for an optimal gasification process in reactor 1.

Reference is now made to Figure 2 showing a second flow scheme according to the invention. In this further scheme the mixing vessel 9 has been replaced by a direct transport system of fly ash to the fluidization vessel 14. Fly ash, separated from product gas and brought in vessel 8 at the operating pressure of reactor 1 is pneumatically transported from vessel 8 to a further vessel 20 via transport line 21. For this transport a carrier gas, such as for example nitrogen is injected into line 21 via an injector 22. Vessel 20 is formed by a cyclone, into which the fly ash and carrier gas are tangentially introduced. The carrier gas separated from the fly ash in cyclone 20 is withdrawn through line 23. For mixing the fly ash with fresh solid fuel the fly ash, collected in the bottom part of vessel 20, is subsequently dosed to fluidization vessel 14 via a rotary valve 24 positioned in a connecting line 25.

To enable the flow of fly ash through line 25 the fluidization vessel 14 is arranged at a lower level than cyclone vessel 20 and at a rather acute angle α with respect to the vertical. The angle of inclination with the vertical of line 25 is preferably not greater than about 20 degrees. Fresh solid fuel from storage vessel 26, brought at the required reactor operating pressure in vessel 27, is introduced via transfer line 28 into the fluidization vessel 14. Carrier gas, withdrawn from line 23, is transported via line 29 into the bottom part of vessel 14. In this manner the solid fuel and fly ash particles are fluidized, while these components are simultaneously mixed with one another to form a substantially homogeneous mixture of solid fuel particles and recirculated fly ash particles. The so formed mixture of solid and fly ash particles is subsequently allowed to flow with the gaseous medium to the reactor 1 via line 2.

It should be noted that the amount of fly ash supplied into fluidization vessel 14 can be controlled by regulating rotation of rotary valve 24. Further, the fly ash can be continuously or intermittently dosed to vessel 14. Rotary valve 24 can be replaced by another suitable dosing system, such as a set of sluicing valves, wherein an appropriate fly ash sluicing volume is available between said valves.

The fluidization vessel 14 is suitably provided with a level control system for regulating the level of solids in said vessel 14. When the minimum solids level is reached due to for example stagnation of the fly ash recycle or due to a sudden lower fly ash production a signal is given to increase the supply of fresh solid fuel from the solid fuel storage vessels, to maintain a stable reactor operation. Pressure losses occuring during the transport of fly ash from the reactor 1 to the fluidization vessel 14 can be overcome by pressurizing the fly ash in one or more of the fly ash vessels in the system, for example by injecting gas into said vessel(s). The shown system

for fly ash recycle can be further provided with means, not shown, for sluicing out minor amounts of fly ash, which might be necessary when processing solid fuel with an excessive high fly ash production.

The gaseous medium for the transport of fly ash and the formation transport of the solid fuel fly ash mixture from fluidization vessel 14 to the reactor may be for example a suitable inert gas, such as nitrogen, or cooled product gas produced in the reactor.

Finally it is remarked that the reactor 1 may be provided with a plurality of burners for solid fuel, wherein a part of these burners is used in the above described recycling process.

CLAIMS

1. Process for the partial combustion of a finely divided solid fuel with fly ash recycle comprising contacting finely divided solid fuel with oxygen in a hot flame in a reactor for partial combustion thereof, withdrawing product gas containing fly ash particles from the reactor, separating the fly ash particles from the product gas, mixing the separated fly ash particles with finely divided solid fuel, forming a fluidized mass of fly ash particles and solid fuel by introducing a gaseous medium therein and transporting the fluidized mass with the gaseous medium to the reactor for partial combustion thereof.

2. Process as claimed in claim 1, wherein the total weight of fly ash particles in the fluidized mass is at most 30 per cent of the total weight of fly ash particles and solid fuel in said mass.

3. Process as claimed in claim 1 or 2, wherein the gaseous medium is nitrogen or cold product gas.

4. Process as claimed in any one of the claims 1-3, wherein the mixing and the formation of a fluidized mass are separate process steps.

5. Process as claimed in any one of the claims 1-3, wherein the mixing and the formation of a fluidized mass are carried out in a single process step.

6. Process as claimed in claim 4, wherein the mixing of separated fly ash particles and solid fuel is carried out in a mixing vessel internally provided with mixing means, having separate inlet means for fly ash particles and solid fuel and outlet means for the formed mixture.

7. Process for the partial combustion of finely divided solid fuel with fly ash recycle substantially as described hereinbefore with particular reference to the drawings.

0109109

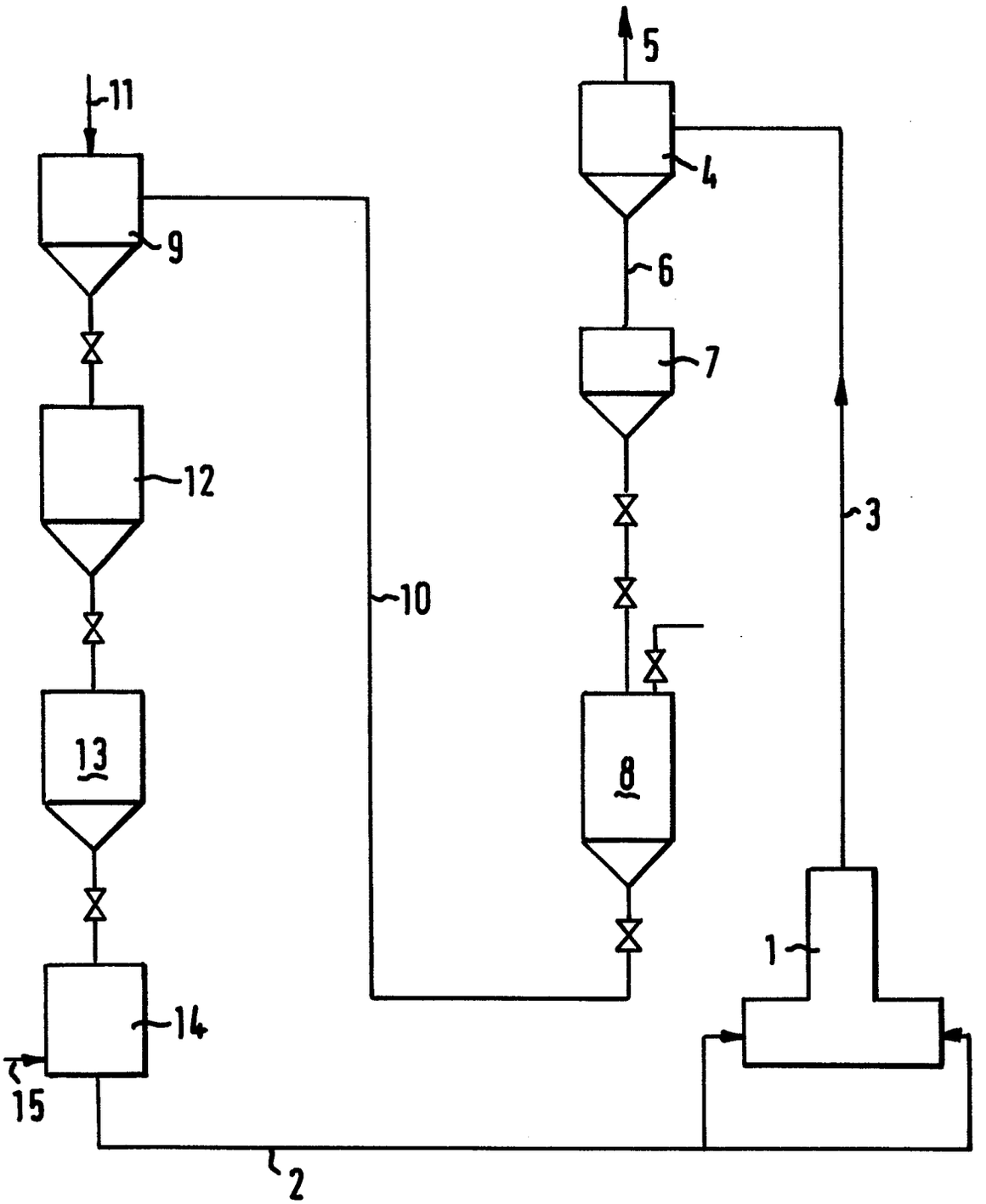

FIG.1

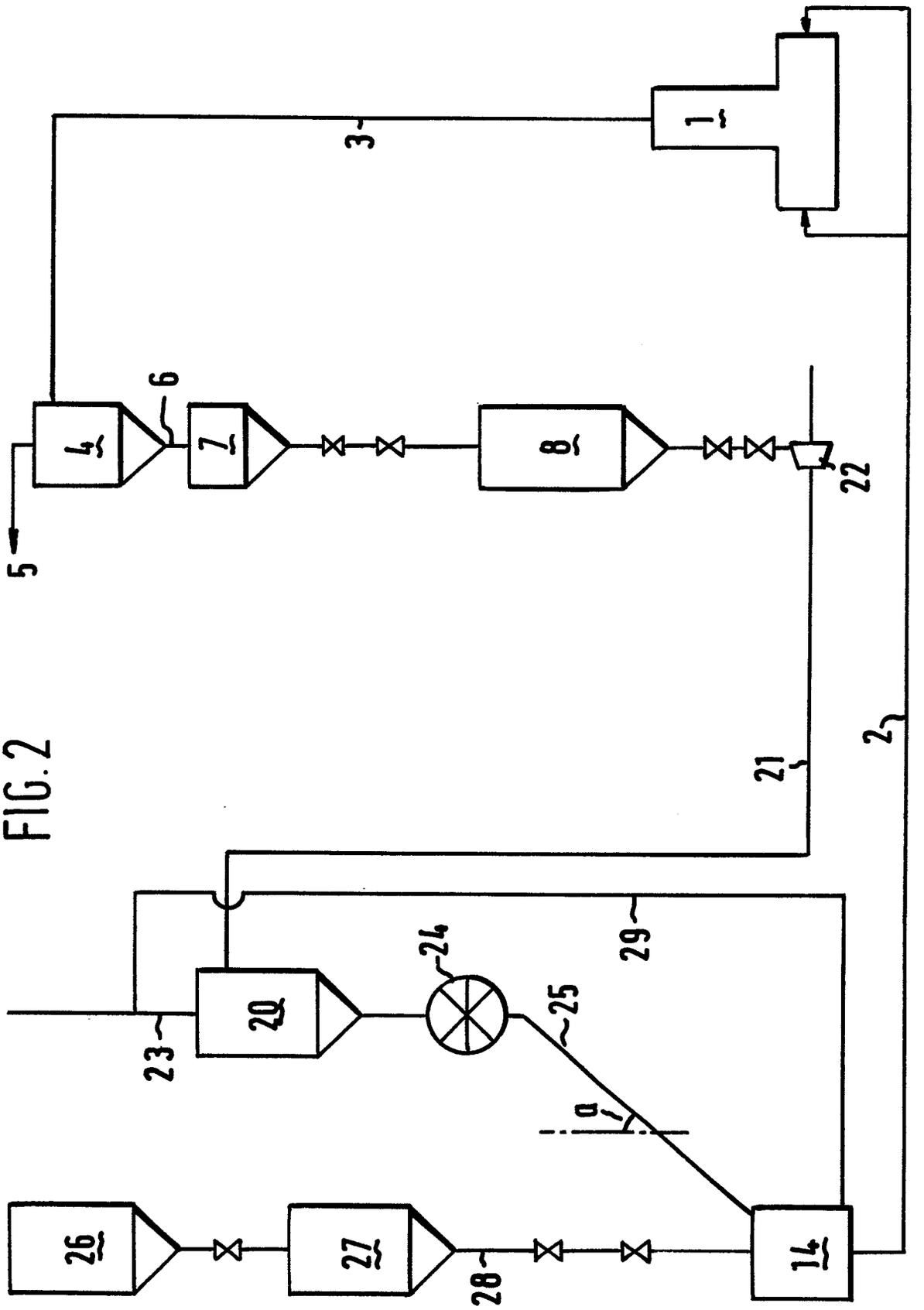

FIG.2