March 31, 1931. L. SATCHWELL 1,798,854

THERMOSTAT

Filed Nov. 21, 1927 2 Sheets-Sheet 1

Fig. 1.

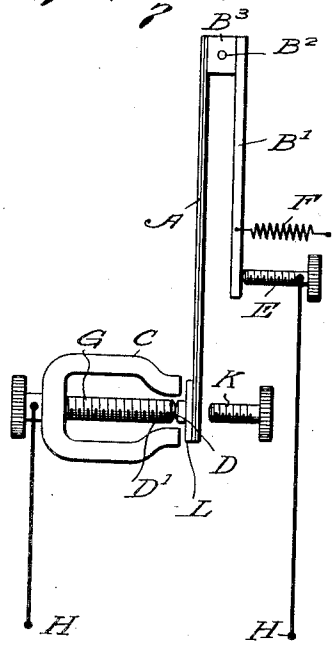

Fig. 4.

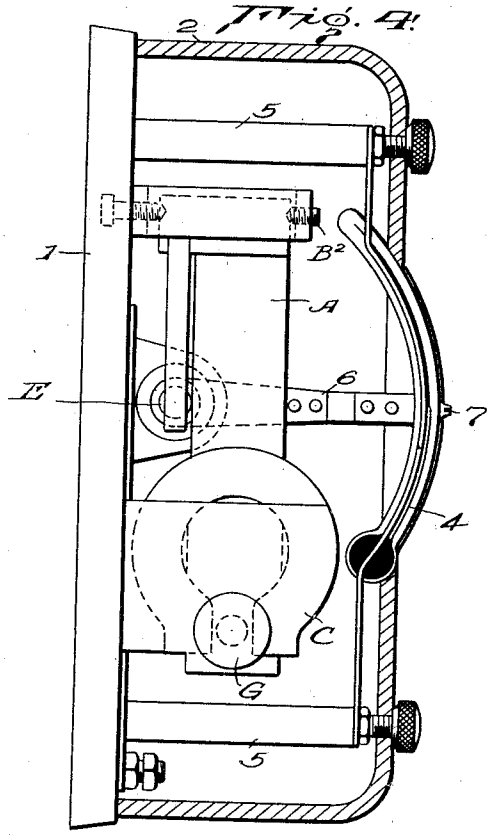

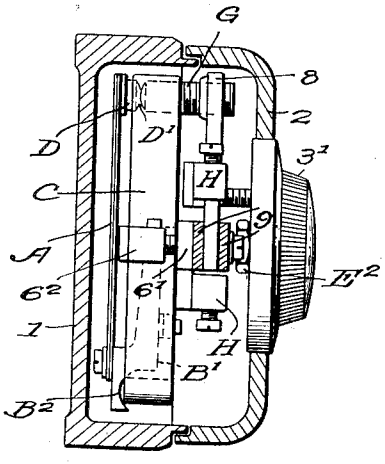

Fig. 5.

Fig. 6.

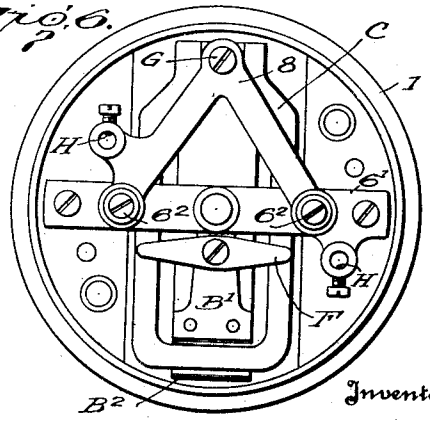

Inventor

Leonard Satchwell,

By Pennie, Davis, Marvin & Edmonds

Attorney

March 31, 1931. L. SATCHWELL 1,798,854

THERMOSTAT

Filed Nov. 21, 1927 2 Sheets-Sheet 2

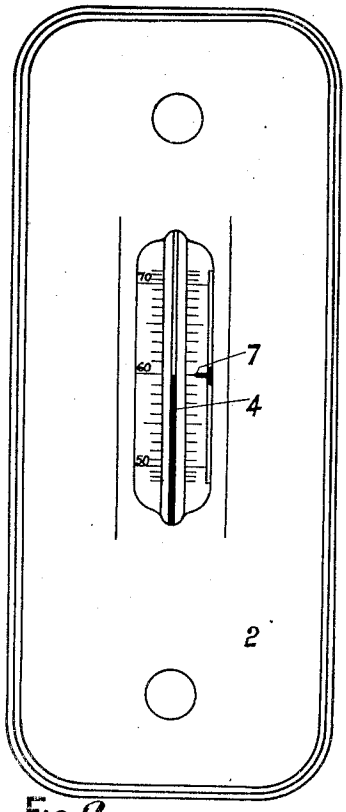

FIG. 2.

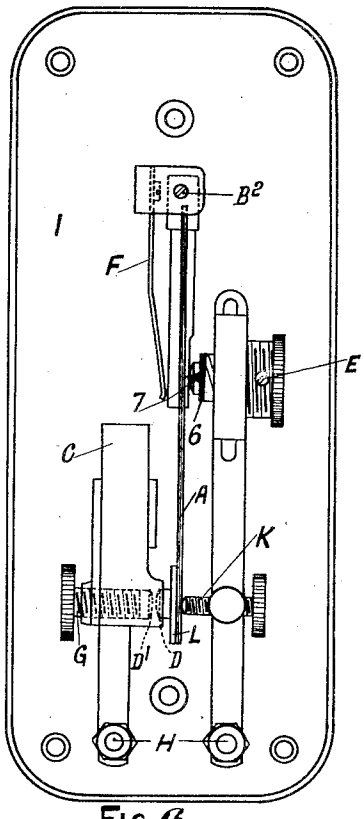

FIG. 3.

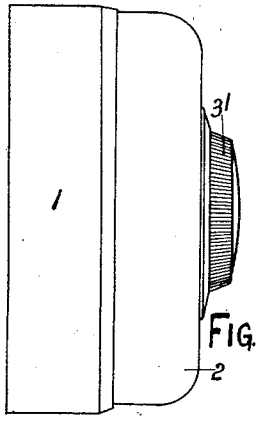

FIG. 7.

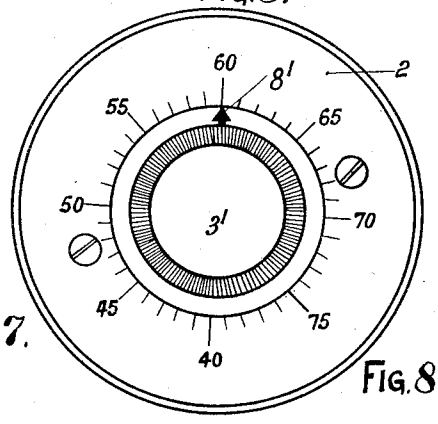

FIG. 8.

Inventor
Leonard Satchwell
By
Dennis, Davis, Mann & Elwood
Attorneys

Patented Mar. 31, 1931

1,798,854

UNITED STATES PATENT OFFICE

LEONARD SATCHWELL, OF SLOUGH, ENGLAND

THERMOSTAT

Application filed November 21, 1927, Serial No. 234,651, and in Great Britain November 25, 1926.

This invention relates to electric thermostats in which the expansion and contraction of a member sensitive to temperature change is used as the control element.

An object of the invention is to improve such thermostats by providing a quick make and break in association with a construction in which very small break gaps can be used with relatively large currents.

One of the features of the device consists in making the magnetically controlled contacts of large mass and of material having a high thermal conductivity such as copper, silver, gold, platinum and their various alloys as a result of which very small break gaps can be used with relatively large currents.

Any suitable expansion device may be used as the control element such as an expanding gas or liquid-filled cartridge or capsule or a piece of metal having a large expansion co-efficient.

The invention is illustrated by way of example only in the accompanying drawings in which Fig. 1 shows diagrammatically the improved thermostat in one of its simplest forms, provided with a control element consisting of a bimetallic strip.

Figs. 2, 3 and 4 illustrate a commercial form of thermostat constructed in accordance with the invention and embodying the arrangement illustrated diagrammatically in Fig. 1, Fig. 2 being a front elevation of the instrument, Fig. 3 a similar view with the cover of the instrument removed and Fig. 4 a central vertical section at right-angles to Fig. 2.

Figs. 5 to 8 illustrate a more compact arrangement of the thermostat, Fig. 5 being a side elevation with the cover in section and Fig. 6 being a front elevation with the cover removed and certain parts omitted. Fig. 7 is a side elevation and Fig. 8 is a front view of the instrument.

Throughout the several figures of the drawings similar reference characters indicate like parts.

In the embodiment illustrated diagrammatically in Fig. 1, there is employed as the control element a bimetallic strip A of the common form, the strip being secured to a block B^3 pivoted at B^2 and fitted with a lever arm B'. The lever arm B' is pressed against the screw E by a spring F. The amount of "break" is determined by an adjusting screw K. The bimetallic strip A is provided at its extremity with an armature L interposed between its contact D and itself. The screw K may be used in lieu of the screw G as one of the contacts and this contact will co-operate with a contact corresponding to D located on the side of the bimetallic strip A adjacent to screw K.

The arrangement shown in Fig. 1 operates as follows:—

On fall in temperature of the room, chamber or body of which the temperature is required to be regulated by the instrument, the bimetallic strip A tends to bend in the direction of the permanent magnet C and in consequence, at a certain temperature, will be attracted suddenly by the magnet C, its approach being limited by contacts D and D'. The bimetallic strip in such circumstances is held by the permanent magnet C against the flexure of the strip and any rise in temperature will have the effect of increasing this flexure until it is sufficient to overcome the force exerted by the magnet when the bimetallic strip will move back a distance determined by the screw K. The screw K is permanently adjusted to arrange for a very small break between the contacts D and D' and it is important that this distance should be small. The instrument is adjustable to act at a given temperature by turning through an angle about its pivot B^2 the block B^3 to which the bimetallic strip is secured by adjustment of the screw E contacting with the lever B'.

I have found that by making the contacts D and D' of relatively large mass and of material having a high thermal conductivity such as copper, silver, gold, platinum, and their various alloys, very small break gaps say of the order of .01 of an inch or less can be used with relatively large alternating currents. Such very small breaks are exceedingly desirable with contacts of large mass and of material having a high thermal conductivity.

I have found that currents of 10 amperes at 250 volts 50 cycles can be interrupted repeatedly many thousands of times using a breaking distance of .005", the contacts being made of silver ¼" diameter and ¼" thick. Due to the large mass and high thermal conductivity cooling and freezing of the molten spot of metal existing at the arc on breaking circuit is produced at the time of reversal of the current (with alternating current) and the arc is satisfactorily ruptured during one half cycle. Normally an arc can only be maintained when breaking an alternating current circuit by a continuance of a high temperature gaseous conductor between the contacts and this gaseous conductor depends for its continuity on the molten spot of metal on the contacts. By making provision as described to conduct away the heat rapidly enough so that freezing takes place the arc cannot possibly be re-established over the next half cycle and only such a distance of opening of contacts as will not allow breaking down of the air insulation by the difference of potential is necessary. With a direct current supply the alternating effect necessary to obtain the benefit of the use of contacts of large mass and of material having high thermal conductivity, as described, may be obtained at the moment of "break" by the use of a condenser of suitable capacity connected across the contacts. It should be pointed out in this connection that small breaks are an essential to success and incidentally are of assistance in the design of accurate thermostats, small breaks being necessary in order to limit the amount of energy being spent at the arc, and thus the amount of heat which must be rapidly dissipated through the contacts.

The range required for thermostats is a fairly large one and it may be necessary and desirable sometimes for convenience and sometimes in dealing with inductive loads to arrange some form of relay switching in combination with the above arrangements for large currents and on certain occasions even for smaller currents.

In the embodiment illustrated in Figs. 2, 3 and 4 in which there is used a thermostat similar to that described with reference to Fig. 1 the thermostat is shown as mounted on a base 1 fitted with a cover 2 provided with an opening 3 through which extends a suitably curved thermometer 4 carried by posts 5 mounted on the base 1. With the screw E is connected a lever 6 having at its end a pointer 7 located adjacent the thermometer 4. The position of the screw E can thus be adjusted by the lever 6. The lever 6 with its indicating pointer 7 may be moved along the scale of the thermometer which is so calibrated to correspond with the working of the instrument that if the pointer is placed at a certain point upon the scale of the thermometer the room, chamber or body with which the thermostat is used will be maintained at the temperature indicated by the pointer. Mere movement of the pointer may thus be used to bring the temperature to be regulated up to the point indicated on the thermometer scale.

In the construction illustrated in Figs. 5 to 8, 1 denotes the circular base and 2 the detachable cover. The bimetallic strip A which is provided with a contact D is shown as being secured to a lever B′ pivoting at B^2 on the back end of the magnet C, such lever being pressed against an adjusting screw E by means of a spring F secured to the lever B′ and engaging the limbs of the magnet C. The adjusting screw E is secured by means of a nut E^2 to a disc 3′ or adjusting knob which is rotatably mounted in the cover 2 and thus serves for calibration of the thermostat. The adjusting screw E passes through an opening in a cross bar 6′ which is secured to the magnet by L shaped nuts 6^2. To this cross bar 6′ is secured a metal arm carrying at its end an adjustable screw G presenting the other contact D′. The metal arm 8 is insulated from the cross bar by insulating washers 9. H indicates the terminal blocks one provided on the cross bar 6′ and one on the metal arm 8. The contact screw G carrying the contact D′ is adjustable in the metal arm 8 as will be understood. The disc 3′ is provided with a pointer 8′ while the cover is calibrated in degrees so that the thermostat can be adjusted to act at different temperatures merely by rotation of the disc. In this modification the leads are connected to the two terminal blocks H. The terminal blocks are in turn respectively connected by a conductor (not shown) with the screw G carrying the contact D′, and with the screw E in contact with the lever B′. The electrical diagram corresponds to the one shown in Fig. 1. Since the lever B′ is arranged to rock upon the edge of the magnet at B^2 it may be moved by rotating the knob 3′ (to which is fastened the screw E) to bring the contacts D′, D either nearer together or farther apart according to the temperature at which it is desired for the thermostat to operate.

It is obvious that the invention is not limited to the constructions illustrated and that the invention may be carried into effect in many ways other than those shown. For instance the permanent magnet as also the control element may take many different forms.

It will be seen that this invention comprises a new combination of elements whereby a relatively heavy current may be readily interrupted, quietly, with a minimum of disturbance and without destruction or damage to the switch mechanism. Such a device is particularly adapted to use in a thermostat

where it is necessary to combine sensitivity with the ability to handle relatively large currents, but it is also of use in switches of other types.

I claim:—

1. An electric thermostatic switch for alternating current, comprising a control element sensitive to temperature changes, circuit making and breaking contacts of high thermal conductivity and large relative mass associated with said control element, a permanent magnet associated with said control element and so constructed and arranged as to cause movement of said contacts to be completed within a period not greater than the period of one alternation of said current, and a stop limiting the movement of said contact to a distance only sufficient to avoid safely the electric breakdown of the intervening insulating medium.

2. An electric thermostatic switch according to claim 1, characterized by the provision of a control element so constructed and arranged to be heated partly by the current passing through it and partly by the body the temperature of which it is intended to regulate.

3. An electric thermostatic switch according to claim 1, characterized by the provision of a control element carrying a contact-bearing armature arranged adjacent the poles of the permanent magnet, whereby movement of said armature under the influence of the control element produce a diversion of the magnetic flux from the poles and causes said armature to be released and attracted in turn.

4. An electric thermostatic switch according to claim 1, characterized by the provision of a control element carrying a contact-bearing armature arranged adjacent the poles of the permanent magnet, said armature being so constructed and arranged as to normally be maintained out of contact with the magnet.

5. A switch for alternating current comprising a fixed contact, a movable contact, said contacts being of high thermal conductivity and relatively large mass, means for applying a force to move said movable contact against or away from said fixed contact, a magnet located at one side of said means for controlling the movement of said movable contact so that each movement is completed within the period of one alternation of the current with which the switch is to be used, and means for limiting the separation between the contacts to a distance only sufficient to safely prevent the electrical breakdown of the insulating medium.

6. A thermostatic switch for alternating current comprising a fixed contact, a movable contact, said contacts being of high thermal conductivity and relatively large mass, a temperature responsive element adapted to move said movable contact against or away from said fixed contact, a permanent magnet located at one side of the heat responsive element for controlling the movement of the movable contact so that each movement thereof is completed within the period of one alternation of the current with which the switch is to be used, and means for limiting the separation between the contacts to a distance only sufficient to prevent electrical breakdown of the insulating medium.

7. A thermostatic switch for alternating current comprising a fixed but adjustable contact, a bi-metallic strip responsive to changes in temperature, adjustable means for holding one end of said strip and a movable contact carried by the other end of said strip adapted to contact with said fixed contact, means to limit the break between the movable and fixed contacts to a distance only sufficient to safely prevent the electrical breakdown of the insulating medium, a magnet located on one side of said bi-metallic strip, an armature therefor carried by said bi-metallic strip adjacent said contact and adapted to be moved to and from said magnet by the movement of said bi-metallic strip whereby each movement of said movable contact is caused to take place within the period of one alternation of the current upon which the device operates.

8. A switch comprising a fixed contact, a movable contact, said contacts being of high thermal conductivity and relatively large mass, means resiliently urging said movable contact against or away from said fixed contact, an armature fixed to said contact, a magnet at one side of said armature, said armature being adapted to be moved toward and away from said magnet by the movement of said contact whereby said magnet controls the movement of said contact so that each movement thereof takes place within the period of one alternation of the current upon which the switch is adapted to operate, and means limiting the separation of the contacts to a distance only sufficient to safely prevent the electrical breakdown of the insulating medium.

9. A thermostatic switch for alternating current comprising a bi-metallic strip responsive to changes in temperature, pivoted means for supporting one end of said bi-metallic strip, an arm on said pivoted means, screw means for adjusting the position of said arm and thereby the position of said bi-metallic strip, a contact carried on the opposite end of said bi-metallic strip, an adjustable contact adapted to contact with said contact on said strip, said contacts being of high thermal conductivity and relatively large mass, means for limiting the separation of said contacts to a distance only sufficient to safely prevent the electrical breakdown of the insulating medium, an armature carried

by said bi-metallic strip adjacent said contact, a magnet on one side thereof, said armature being adapted to be moved toward and away from said magnet by the movement of said bi-metallic strip and contact, whereby said magnet influences the movement of said contact to cause it to take place within the period of one alternation of the current upon which the switch is adapted to operate.

10. A switch for alternating current comprising a fixed contact, a movable contact, said contacts being of high thermal conductivity and relatively large mass, means for applying a force to move said movable contact against or away from said fixed contact, a magnet located at one side of said means for controlling the movement of said movable contact so that each movement is completed within the period of a few alternations of the current with which the switch is to be used, and means for limiting the separation between the contacts to a distance only sufficient to safely prevent the electrical breakdown of the insulating medium.

11. A thermostatic switch for alternating current comprising a bi-metallic strip resposive to changes in temperature, pivoted means for supporting one end of said bi-metallic strip, an arm on said pivoted means, screw means for adjusting the position of said arm and thereby the position of said bi-metallic strip, a contact carried on the opposite end of said bi-metallic strip, an adjustable contact adapted to contact with said contact on said strip, said contacts being of high thermal conductivity and relatively large mass, means for limiting the separation of said contacts to a distance only sufficient to safely prevent the electrical breakdown of the insulating medium, an armature carried by said bi-metallic strip adjacent said contact, a magnet on one side thereof, said armature being adapted to be moved toward and away from said magnet by the movement of said bi-metallic strip and contact, whereby said magnet influences the movement of said contact to cause it to take place within the period of a few alternations of the current upon which the switch is adapted to operate.

In testimony whereof I have signed my name to this specification.

LEONARD SATCHWELL.