(12) INTERNATIONAL APPLICATION PUBLISHED UNDER THE PATENT COOPERATION TREATY (PCT)

(19) World Intellectual Property Organization
International Bureau

(43) International Publication Date
1 November 2012 (01.11.2012)

WIPO | PCT

(10) International Publication Number
WO 2012/148717 A1

(51) International Patent Classification:
A61M 5/315 (2006.01)

(21) International Application Number:
PCT/US2012/033739

(22) International Filing Date:
16 April 2012 (16.04.2012)

(25) Filing Language: English

(26) Publication Language: English

(30) Priority Data:
61/479,957 28 April 2011 (28.04.2011) US

(71) Applicants *(for all designated States except US)*: **BIOGEN IDEC MA INC.** [—/US]; 14 Cambridge Center, Cambridge, MA 02142 (US). **SHL GROUP AB** [—/SE]; Augustendalsvagen 19, Box 1240, S-131 28 Nacka Strand (SE).

(72) Inventors; and

(75) Inventors/Applicants *(for US only)*: **KUCZEK, John** [US/US]; 71 Rindon Park Drive, Lowell, MA 01851 (US). **PATIENCE, Clive** [GB/US]; 689 Hale Street, Beverly, MA 01915 (US). **QUINN, Donovan** [US/US]; 7 Murdock Street, Cambridge, MA 02139 (US). **GIAMBATTISTA, Lucio** [US/US]; 113 South Ridgedale Avenue, East Hanover, NJ 07938 (US).

(74) Agent: **WALLER, Patrick, R.H.**; Wolf Greenfield & Sacks, P.C., 600 Atlantic Avenue, Boston, MA 02210-2206 (US).

(81) Designated States *(unless otherwise indicated, for every kind of national protection available)*: AE, AG, AL, AM, AO, AT, AU, AZ, BA, BB, BG, BH, BR, BW, BY, BZ, CA, CH, CL, CN, CO, CR, CU, CZ, DE, DK, DM, DO, DZ, EC, EE, EG, ES, FI, GB, GD, GE, GH, GM, GT, HN, HR, HU, ID, IL, IN, IS, JP, KE, KG, KM, KN, KP, KR, KZ, LA, LC, LK, LR, LS, LT, LU, LY, MA, MD, ME, MG, MK, MN, MW, MX, MY, MZ, NA, NG, NI, NO, NZ, OM, PE, PG, PH, PL, PT, QA, RO, RS, RU, RW, SC, SD, SE, SG, SK, SL, SM, ST, SV, SY, TH, TJ, TM, TN, TR, TT, TZ, UA, UG, US, UZ, VC, VN, ZA, ZM, ZW.

(84) Designated States *(unless otherwise indicated, for every kind of regional protection available)*: ARIPO (BW, GH, GM, KE, LR, LS, MW, MZ, NA, RW, SD, SL, SZ, TZ, UG, ZM, ZW), Eurasian (AM, AZ, BY, KG, KZ, MD, RU, TJ, TM), European (AL, AT, BE, BG, CH, CY, CZ, DE, DK, EE, ES, FI, FR, GB, GR, HR, HU, IE, IS, IT, LT, LU, LV, MC, MK, MT, NL, NO, PL, PT, RO, RS, SE, SI, SK, SM, TR), OAPI (BF, BJ, CF, CG, CI, CM, GA, GN, GQ, GW, ML, MR, NE, SN, TD, TG).

Published:

— *with international search report (Art. 21(3))*

WO 2012/148717 A1

(54) **Title**: A LIMITER FOR A DISPENSING DEVICE

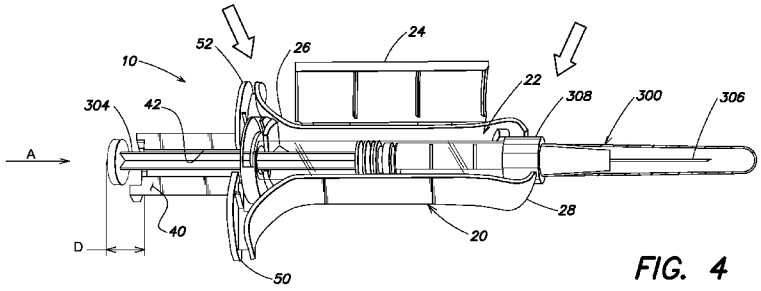

FIG. 4

(57) **Abstract**: A limiter for a dispensing device is provided. The limiter includes a body (20) arranged to mount with at least a portion of a dispensing device (300), and a stop extending from the body. The stop (40) is configured to permit movement a plunger of the dispensing device a predetermined distance in a dispensing direction correlated to a desired volume of medium to be delivered from the dispensing device. The stop is configured to prevent further movement of the plunger in the dispensing direction, thereby limiting the amount of medium delivered from the dispensing device. The dispensing device may be a syringe.

A LIMITER FOR A DISPENSING DEVICE

FIELD

The present invention is directed to a limiter for a dispensing device, and more particularly to a limiter which limits the amount of medium delivered from a dispensing device, such as a syringe.

BACKGROUND

Medications are often dispensed to a patient via a dispensing device, such as a syringe. The syringe generally includes a barrel which holds the medication, a needle attached to one end of the barrel to inject the medication into the patient, and a plunger slideably received within the other end of the barrel to push the medication out of the barrel and into the needle.

Many medications are packaged in prefilled syringes. In a prefilled syringe, the syringe barrel is filled with a full dose of the medication. The needle of the prefilled syringe is typically covered and/or replaced with a safety cap. To dispense the medication, the needle is attached to the end of the barrel and/or the safety cap is removed from the needle and the needle is inserted into the patient. The patient or caregiver slides the plunger through the barrel of the syringe until all of the medication is injected.

There are circumstances in which the patient does not need, or should not receive, a full dose of the medication in a prefilled syringe. For example, when a patient is starting a new medication, a doctor may recommend beginning with a partial dose to help the patient adapt to the medication. This approach is known as titration. To administer a partial dose, the patient is instructed to partially slide the plunger through the barrel. The syringe barrel may include graduated markings which the patient may use as a reference when dispensing a partial dose.

SUMMARY

In one illustrative embodiment, a limiter for a dispensing device is provided. The limiter includes a body arranged to mount with at least a portion of a barrel of a dispensing device, and a stop extending from the body. The stop is configured to permit movement of a plunger of the dispensing device a predetermined distance in a dispensing direction correlated to a desired volume of medium to be delivered from the dispensing device. The stop is configured to prevent further movement of the plunger in the dispensing direction, thereby limiting the amount of medium delivered from the dispensing device.

In another illustrative embodiment, a kit is provided where the kit includes a plurality of limiters. The stop of the first limiter is configured to permit movement of the plunger a first predetermined distance in the dispensing direction, and the stop of the second limiter is configured to permit movement of the plunger a second predetermined distance in the dispensing direction, where the first predetermined distance is greater than the second predetermined.

In yet another embodiment, a method of limiting the dispensing of liquid from a dispensing device. The method includes mounting a dispensing device with a limiter such that at least a portion of the dispensing device is mounted with a body of the limiter, where a stop extends from the body. The method also includes moving a plunger of the dispensing device a predetermined distance in a dispensing direction correlated to a desired volume of medium to be dispensed, to dispense the medium until the plunger contacts the stop that is configured to prevent further movement of the plunger in the dispensing direction, thereby limiting the amount of medium delivered from the dispensing device.

Various embodiments of the present invention provide certain advantages. Not all embodiments of the invention share the same advantages and those that do may not share them under all circumstances.

Further features and advantages of the present invention, as well as the structure of various embodiments that incorporate aspects of the invention are described in detail below with reference to the accompanying drawings.

BRIEF DESCRIPTION OF DRAWINGS

The foregoing and other objects and advantages of the invention will be appreciated more fully from the following drawings, wherein like reference characters designate like features, in which:

FIG. 1 is a schematic view of a kit including three different sized syringe dispensing devices;

FIG. 2 is a schematic perspective view of one embodiment of a syringe dispensing device;

FIGS. 3-6 are schematic perspective views of a syringe being inserted into the device of FIG. 2;

FIG. 7 is a detailed view of a portion of the device of FIG. 2; and

FIGS. 8-10 are schematic perspective views illustrating the device of FIG. 2 being used to dispense liquid from a syringe into a patient.

DETAILED DESCRIPTION

Applicant recognized that it may be difficult to accurately dispense an amount of medium from a dispensing device. For example, when the patient is self-injecting with a syringe, it may be difficult for the patient to look at markings on the side of the syringe barrel to estimate the desired partial dose. Such difficulties may lead to either an under dose or an overdose of the medication. As mentioned above, when a new medication is being administered, dispensing more than a recommended partial dose may lead to undesirable side effects. Dispensing less than the desired partial dose may diminish the effect of the medication. Applicant recognized a need for a device to help alleviate these difficulties.

Aspects of the present invention are directed to a limiter configured to limit the amount of medium delivered from a dispensing device. As set forth in greater detail below, the limiter may be configured to dispense a desired partial dose of the medium. Although the following description describes such a limiter in connection with a syringe, it is also contemplated that the limiter may be used with other dispensing devices that dispense medication. Furthermore, although the following description describes the dispensing

device having a needle which is used to inject the medium into a patient, a needle is not required in all embodiments. It is contemplated that the medium may be expelled from the dispensing device without being injected into a patient with a needle. For example, the medium may be configured to be expelled and either ingested or inhaled (via a patient's nose or mouth).

It is also contemplated that the limiter may be used in connection with a variety of types of medium which may be dispensed from the dispensing device. For example, in one embodiment, the limiter is for use with dispensing devices which dispense medication. One of skill in the art would appreciate that the medication may, for example, be in liquid form, gaseous form, and/or a solid form (such as a powder form). It should also be recognized that the limiter may be used to limit the dispensing of other non-medication substances, as the invention is not so limited.

Furthermore, it is contemplated that the limiter may be configured in a manner for easy handling. The limiter may be configured for use with a medication that is given to a patient with deteriorating manual dexterity. Thus, it may be difficult for the patient both to handle small components as well as to hold the dispensing device. As set forth below, in one embodiment, the limiter is configured with larger components and with a finger grip to permit easier handling.

Turning now to the figures, FIG. 1 illustrates a kit which includes a plurality of limiters 10, 100, 200. In this particular embodiment, a first limiter 10 is configured to dispense only one quarter of the medium in the dispensing device, a second limiter 100 is configured to dispense one half of the medium in the dispensing device, and a third dispensing device 200 is configured to dispense three quarters of the medium in the dispensing device. As discussed below, the kit may be arranged with limiters which may be used to dispense incrementally increasing doses of the medium. It should be recognized that, in another embodiment, a limiter 10, 100, 200 may be configured to dispense a different amount of the medium in a dispensing device, including, but not limited to one third, two thirds, and a full dose. It should be recognized that when multiple limiters are provided, the volume change between the doses need not be uniform. The details of the first

limiter 10 are discussed in greater detail below. The second and third limiters 100, 200 may include similar components.

As shown in FIGS. 2-5, the limiter 10 is configured to limit the amount of medium dispensed from a dispensing device 300. In this particular embodiment, the dispensing device is a syringe. The limiter 10 includes a body 20 arranged to mount with at least a portion of a dispensing device 300. In this illustrative embodiment, the body 20 is arranged to mount with a barrel 302 of the dispensing device 300. As shown, the body 20 may include a slot 36 which is configured to mount with a flange portion 310 of the dispensing device 300. The slot 36 may be sized and arranged to receive the flange 310.

A stop 40 extends from the body 20 and as set forth below, the stop 40 is configured to limit the amount of medium dispensed by limiting the stroke length of the plunger 304 of the dispensing device. As shown in FIGS. 4, 6 and 7, the stop 40 permits movement of a plunger 304 of the dispensing device 300 a predetermined distance D in a dispensing direction (see arrow A) which is correlated to the desired volume of medium to be delivered from the dispensing device 300. As illustrated, the stop 40 is configured to prevent further movement of the plunger 304 in the dispensing direction A, thereby limiting the amount of medium delivered from the dispensing device.

In the illustrative embodiment, the body 20 is a housing which is configured to hold at least a portion of a syringe barrel 302 and the stop 40 is configured as a collar extending outwardly from the first end 26 of the housing. The collar may have a channel 42 configured to receive at least a portion of a plunger 304 such that the plunger 304 is movable within the channel 42. In this particular embodiment, the second end 28 of the housing has an opening 30 such that a needle 306 coupled to the barrel 302 extends out of the housing.

The housing may include a receptacle 22 and a door 24. In this illustrative embodiment, the door 24 is pivotally coupled to the receptacle 22 via hinges 23. The door may be opened to place the dispensing device 300 within the housing, and the door is pivoted closed to retain the dispensing device within the receptacle 22. As shown, the door may include a plurality of protrusions which may mate within corresponding components in the receptacle 22 to lock the door in the closed position. In another embodiment, the door 24 may be slidably coupled to the receptacle, and in yet another embodiment, the housing

may not include a door, as the invention is not so limited. As shown, the housing may enclose a substantial portion of the barrel 302. However, it is also contemplated that the housing may be configured differently, and may, for example, include one or more openings such that the barrel 302 is more visible when the dispensing device 300 is in the limiter 10.

In one embodiment, the door 24 is provided to visually obstruct a substantial portion of the barrel 304 of the dispensing device 300. After a partial dose is administered to a patient, some of the medication remains in the barrel 304. There is a concern that a patient will try to reuse this medication. Reuse of the dispensing device 300 may compromise the sterility of the medication which could potentially lead to infection. Thus, the door 24 may be provided to cover the remaining medication so that a patient may be less likely to reuse the device 300.

It should be appreciated that although the housing and collar are discussed above, it is also contemplated that the body 20 and stop 40 may be arranged differently, as the invention is not so limited.

As shown in FIGS. 7-10, the limiter 10 is configured such that a partial dose of the medium in the dispensing device 300 can be accurately delivered to a patient. In particular, the limiter 10 is configured such that the plunger 304 is movable into the barrel 302 to push medium into the needle 306 so that the liquid can be expelled from the device 300. The stop 40 is arranged to permit movement of the plunger 304. The stop 40 may be positioned to provide the desired partial dose of the liquid and is arranged to prevent further movement of the plunger 304. In this respect, the plunger 304 may be movable into the barrel 302 of the dispensing device 300 to push a partial dose of the medium into the needle 306. Once the plunger 304 contacts the stop 40, further movement of the plunger 304 is prevented which prevents further medium from being dispensed. One of skill in the art will appreciate that by varying the height H_1 of the stop 40, one can control the predetermined distance D that the plunger 304 is permitted to travel in the dispensing direction A to dispense the medium, thus dispensing a controlled partial dose.

In this particular illustrative embodiment, the stop has an end wall which may be recessed to form a socket 44 configured to contact an end portion of the plunger 304 to prevent further movement of the plunger in the dispensing direction. In this illustrative

embodiment, the collar is substantially C-shaped and the socket is substantially C-shaped. However, it should be appreciated that other shapes and configurations are also contemplated, as the invention is not so limited. For example, square, oval, triangular and irregular shapes are also contemplated. In this illustrative embodiment, the outer shape of the stop 40 is substantially the same as the shape of the socket 44. The invention also contemplates embodiments where the shape of the stop 40 is different than the shape of the socket 44.

Other stop configurations are also contemplated as the invention is not limited to the collar configuration shown in the figures. For example, in one embodiment, the stop 40 may include one or more protrusions extending from the body 20 designed to interfere with the movement of the plunger 304. One of skill in the art would appreciate that the stop 40 may include any feature which blocks or inhibits further movement of the plunger 304 once the plunger 304 contacts the stop 40.

Furthermore, an adjustable stop 40 may be provided. The stop 40 may be adjustable to adjust the amount of the medium that can be dispensed from the dispensing device 300 with one particular limiter 10. As mentioned above, the stop 40 is configured to permit movement of the plunger 304 a predetermined distance D which is correlated to a desired volume of medium to be delivered. The height H_1 of the stop 40 may be adjustable to vary the predetermined distance D that the plunger can move. For example, the stop 40 may include telescoping portions. One of ordinary skill in the art would appreciate that there are a variety of ways in which the stop 40 may be adjustable.

As shown in FIGS. 2-4, the housing may include at least one rib 32, 34, configured to position and/or retain the barrel 302 of the dispensing device within the housing. In one illustrative embodiment, the housing includes a first rib 32 positioned at a first end 26 of the housing. This rib 32 may be positioned within the receptacle 22 and may be configured to engage with an upper portion of the barrel 302. The rib 32 may be resilient such that it can flex to provide a snap-fit arrangement of the dispensing device 300 within the housing.

A second rib 34 may be positioned at the second end 28 of the housing. As illustrated, the second rib 34 may be positioned within the receptacle near the opening 30 and may be configured to engage with a lower portion of the barrel 302 of the dispensing

device 300. In one embodiment, the second rib 34 is substantially C-shaped to align with the outer contour of the barrel. As shown in FIGS. 3-4, the lower portion of the barrel 302 may include a flange 308 configured to couple the barrel 302 to the needle 306 of the dispensing device. The second rib 34 may be configured to be smaller than the outer diameter of the flange 308 to prevent the needle 306 from sliding into the housing.

The limiter 10 may also include one or more components configured to provide a finger grip during dispensing. As mentioned above, such finger grips may enhance the handling of the dispensing device. In one illustrative embodiment, the body 20 includes at least one outwardly extending arm 50, 52 arranged to provide a finger grip during dispensing. In this illustrative embodiment, there are two arms 50, 52 positioned at the first end 26 of the housing, and the underside 54, 56 of each of the arms 50, 52 has a curved contour to match the profile of a finger tip.

The limiter 10 may be used as follows: At least a portion of the dispensing device 300 may be mounted with the body 20 of the limiter 10. If the limiter includes a door 24, the door may be opened to facilitate the placement of the device 300 relative to the limiter, and the door 24 may thereafter be closed. If the limiter includes one or more ribs 32, 34, the ribs may be used to position and/or engage the device within the body 20 and the ribs may be configured to provide a snap-fit. The device 300 may include a needle 306 which may already be coupled to the barrel 304, and if so, any safety caps may be removed and the needle 306 may be injected into a patient's body. In one embodiment, the needle 306 may arrive detached from barrel 304 and the needle 306 may be coupled to the barrel through connector 308 after the device 300 is mounted with the limiter 10. It should be recognized that the dispensing device 300 may not include a needle 306 and the medium may be expelled from the device 300. The patient or caregiver pushes the plunger 304 to slide the plunger a predetermined distance D in a dispensing direction A to thereby dispense medium. Medium may be dispensed until the plunger 304 contacts a stop 40 that is configured to prevent further movement of the plunger 304 in the dispensing direction. Thereafter, the device 300 and limiter 10 may be discarded.

As mentioned above, the limiter 10 is configured to limit the amount of medium dispensed from a dispensing device 300. In one embodiment, the medium is a medication,

such as, but not limited to various drug therapies and/or antibiotics. In one embodiment, the limiter 10 may be used with Avonex® which is an Interferon beta-1a intramuscular injection used to prevent the symptoms of multiple sclerosis (MS) and may also slow the development of disability in patients with MS, which is manufactured by Biogen Idec. One of skill in the art would recognize that the invention is not limited for use with a dispensing device having a particular medium therein. As discussed above, the medium may, for example, be in liquid form, gaseous form, and/or a solid form (such as a powder form). It should also be recognized that the limiter may be used to limit the dispensing of other non-medication substances, as the invention is not so limited.

The limiters 10, 100, 200 are discussed above in combination with a prefilled dispensing device, such as, but not limited to a prefilled syringe. It should be appreciated that the limiters 10, 100, 200 may be used with a dispensing device that is manually filled, as the present invention is not limited for use with prefilled devices.

The limiter 10 may be made manufactured in a variety of ways as the invention is not so limited. In one embodiment, the stop 40 is integrally formed with the body 20. In another embodiment, the two components are formed separately and may thereafter be secured together by methods known to one of ordinary skill in the art such as, but not limited to adhesive, mechanical fasteners, or by welding. In one embodiment, the body 20 and stop 40 are made from molded plastic, and the limiter 10 may, for example be injection molded.

As mentioned above, and as shown in FIG. 1, a kit may be provided with a plurality of limiters 10, 100, 200 for limiting the amount of medium delivered from a dispensing device 300. Limiters 100, 200 may be configured to be substantially similar to the limiter 10 described above and shown in FIGS. 2-10. However, as shown in FIG. 1, the height H_1, H_{12} H_3 of the stops 40, 140, 240 may vary. As mentioned above, by varying the height of the stop 40, one can control the predetermined distance D that the plunger 304 is permitted to travel in the dispensing direction, thus dispensing a controlled partial dose. In this illustrative embodiment, the first limiter 10 has the tallest stop 40 and is thus configured to provide the smallest dose of liquid. This first limiter 10 may be configured for the initial dose of the liquid to minimize side affects of the medication. In this illustrative

embodiment, the third limiter 200 has the shortest stop 240 and thus, may be configured to provide a larger dose. The second limiter 100 has a stop 140 which is shorter than the first stop 40 but taller than the third stop 240, and thus is configured to provide a partial dose that is larger than the dose provided by the first limiter 10 and smaller than the dose provided by the third limiter 200. In one embodiment, the kit further includes a plurality of dispensing devices 300, and one dispensing device 300 may be provided for each limiter 10, 100, 200.

In one embodiment the limiter 10, 100, 200 is configured for a single use with one prefilled syringe and is designed to be disposable. It is also contemplated that the limiter 10, 100, 200 may be configured for reuse as the components of the limiter should not come into direct contact with the medium within the device 300 and may only contact the patient externally.

It should be appreciated that various embodiments of the present invention may be formed with one or more of the above-described features. The above aspects and features of the invention may be employed in any suitable combination as the present invention is not limited in this respect. It should also be appreciated that the drawings illustrate various components and features which may be incorporated into various embodiments of the present invention. For simplification, some of the drawings may illustrate more than one optional feature or component. However, the present invention is not limited to the specific embodiments disclosed in the drawings. It should be recognized that the present invention encompasses embodiments which may include only a portion of the components illustrated in any one drawing figure, and/or may also encompass embodiments combining components illustrated in multiple different drawing figures.

It should be understood that the foregoing description of various embodiments of the invention are intended merely to be illustrative thereof and that other embodiments, modifications, and equivalents of the invention are within the scope of the invention recited in the claims appended hereto.

CLAIMS

1. A limiter for a dispensing device, the limiter comprising:

a body constructed and arranged to mount with at least a portion of a barrel of a dispensing device; and

a stop extending from the body, the stop being configured to permit movement of a plunger of the dispensing device a predetermined distance in a dispensing direction correlated to a desired volume of medium to be delivered from the dispensing device, wherein the stop is configured to prevent further movement of the plunger in the dispensing direction, thereby limiting the amount of medium delivered from the dispensing device.

2. The limiter of claim 1, wherein the body is a housing constructed and arranged to hold at least a portion of a barrel of a dispensing device, the housing having a first end and a second end.

3. The limiter of claim 2, wherein the stop is constructed and arranged as a collar extending outwardly from the first end of the housing, the collar having a channel therethrough, the collar being configured to receive at least a portion of the plunger such that the plunger is moveable within the channel.

4. The limiter of claim 2, wherein the second end of the housing has an opening configured such that a needle of a dispensing device extends out of the housing.

5. The limiter of claim 1, in combination with a dispensing device.

6. The limiter of claim 5, wherein the dispensing device is a syringe.

7. The limiter of claim 3, wherein the collar is substantially C-shaped.

8. The limiter of claim 3, wherein the stop includes a socket configured to receive an end portion of the plunger.

9. The limiter of claim 8, wherein the socket is substantially C-shaped.

10. The limiter of claim 2, wherein the housing comprises a receptacle and a door.

11. The limiter of claim 10, wherein the door is pivotally coupled to the receptacle.

12. The limiter of claim 1, wherein the stop is integrally formed with the body.

13. The limiter of claim 2, wherein the housing comprises at least one rib configured to retain the dispensing device within the housing.

14. The limiter of claim 13, wherein the at least one rib includes a first rib positioned at the first end of the housing and a second rib position at the second end of the housing.

15. The limiter of claim 1, wherein the body includes at least one outwardly extending arm configured to provide a finger grip.

16. The limiter of claim 1, wherein the body and stop are made from molded plastic.

17. A kit comprising:

a plurality of limiters, including at least a first limiter as recited in claim 1, and a second limiter as recited in claim 1; and

wherein the stop of the first limiter is configured to permit movement of the plunger a first predetermined distance in the dispensing direction and the stop of the second limiter is configured to permit movement of the plunger a second predetermined distance in the dispensing direction, wherein the first predetermined distance is greater than the second predetermined.

18. The kit of claim 17, further comprising a plurality of dispensing devices.

19. The kit of claim 18, wherein the plurality of dispensing devices are syringes.

20. A method of limiting the dispensing of liquid from a dispensing device, comprising:

mounting a dispensing device with a limiter such that at least a portion of the dispensing device is mounted with a body of the limiter, wherein a stop extends from the body;

moving a plunger of the dispensing device a predetermined distance in a dispensing direction correlated to a desired volume of medium to be dispensed, to dispense the medium until the plunger contacts the stop that is configured to prevent further movement of the plunger in the dispensing direction, thereby limiting the amount of medium delivered from the dispensing device.

21. The method of claim 20, wherein the act of mounting the dispensing device with a limiter includes placing the dispensing device in a housing and pivotally closing a door on the housing.

22. The method of claim 20, wherein the act of mounting the dispensing device with the limiter includes placing a plunger of the dispensing device in collar having a channel therethrough, such that the plunger is moveable within the channel.

23. The method of claim 20 wherein the act of mounting the dispensing device with the limiter includes retaining the dispensing device with at least one rib positioned on the body.

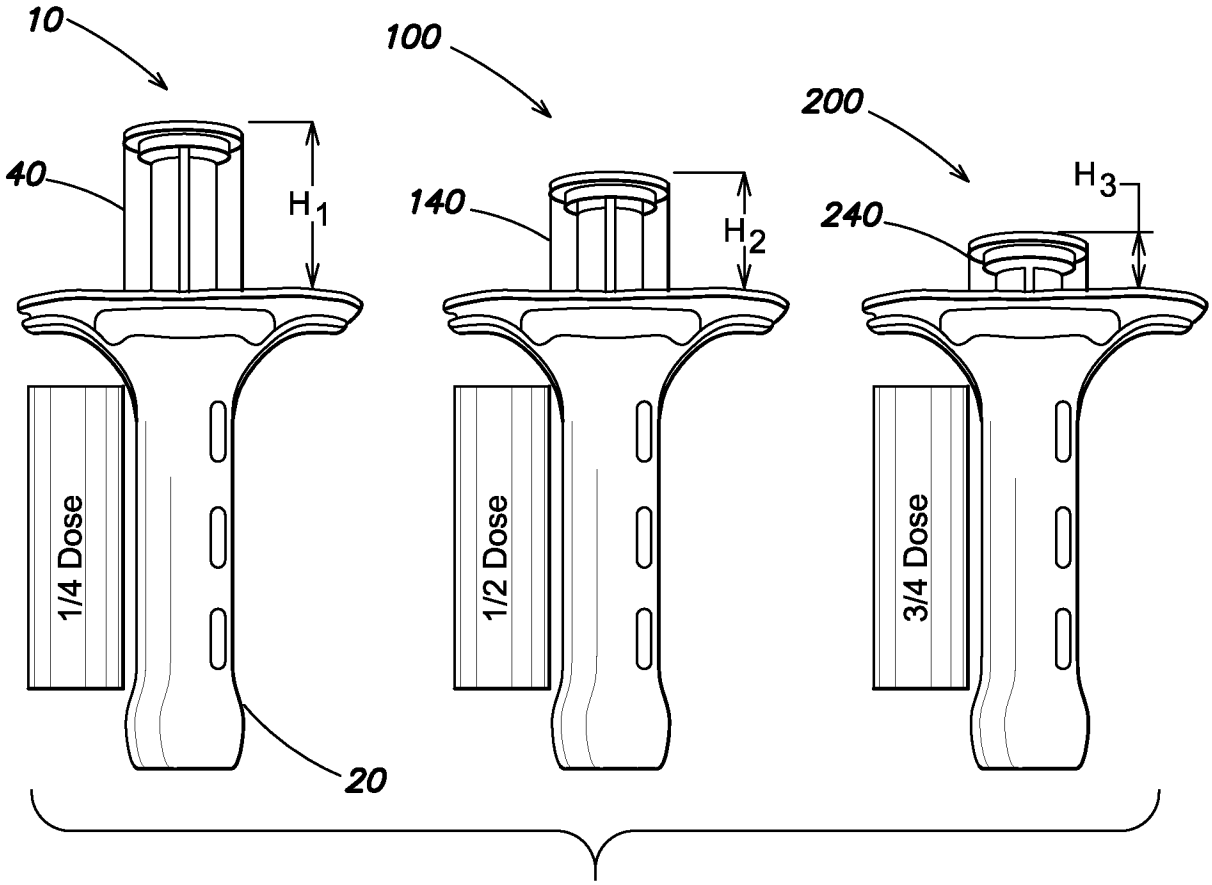
10
100
200
40
140
240
H_1
H_2
H_3
1/4 Dose
1/2 Dose
3/4 Dose
20

FIG. 1

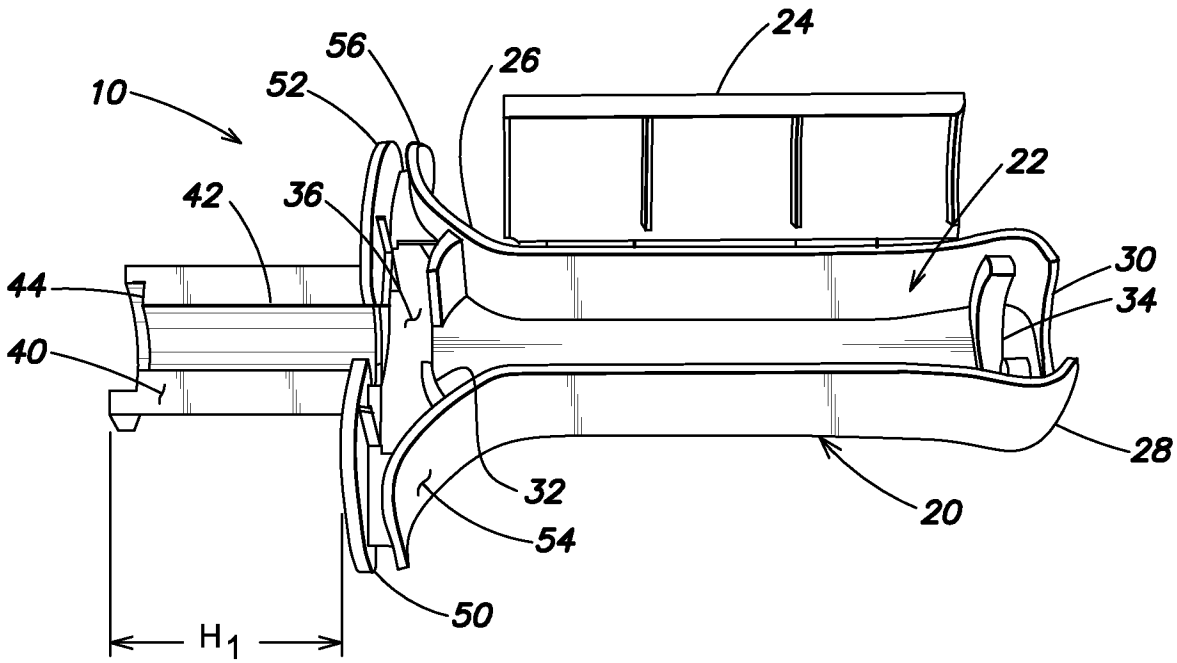
10
56
52
26
24
22
42
36
44
40
30
34
28
32
54
50
20
H_1

FIG. 2

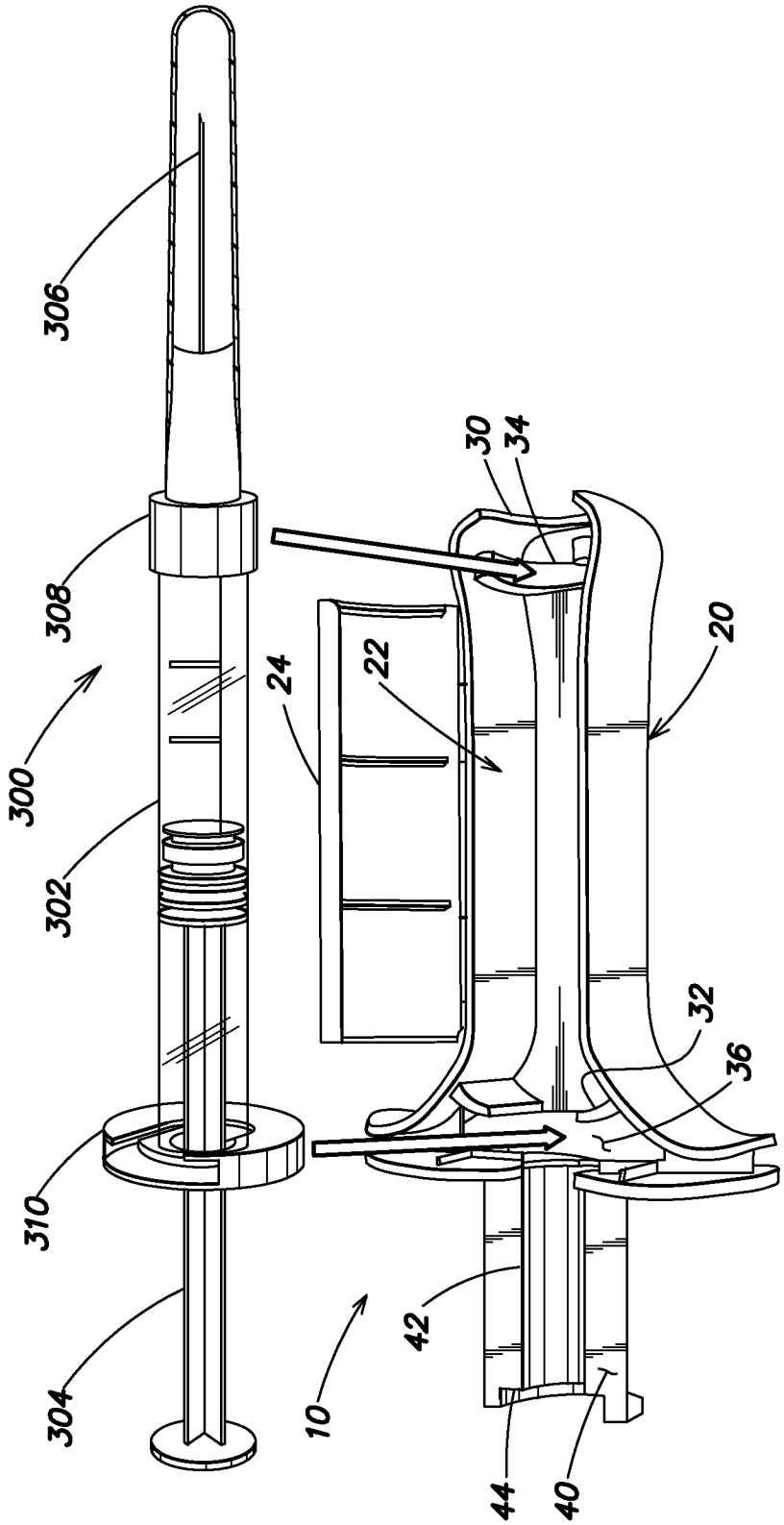

FIG. 3

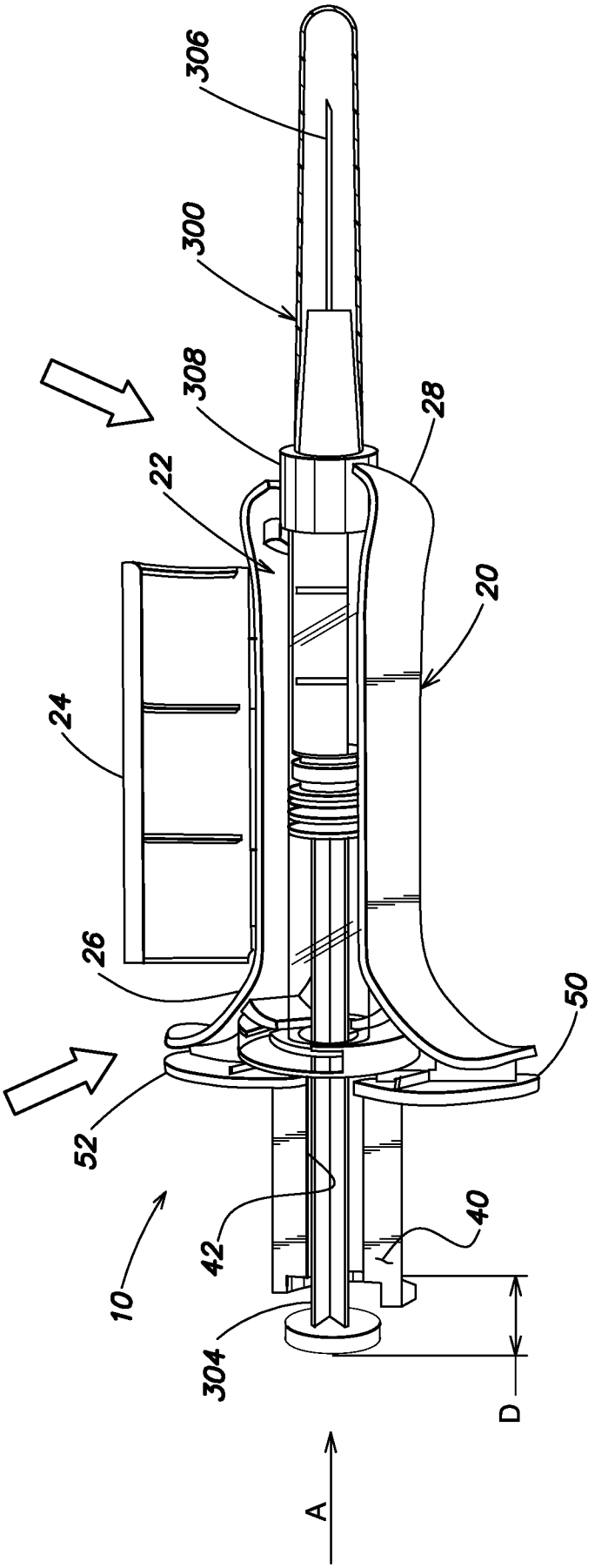

FIG. 4

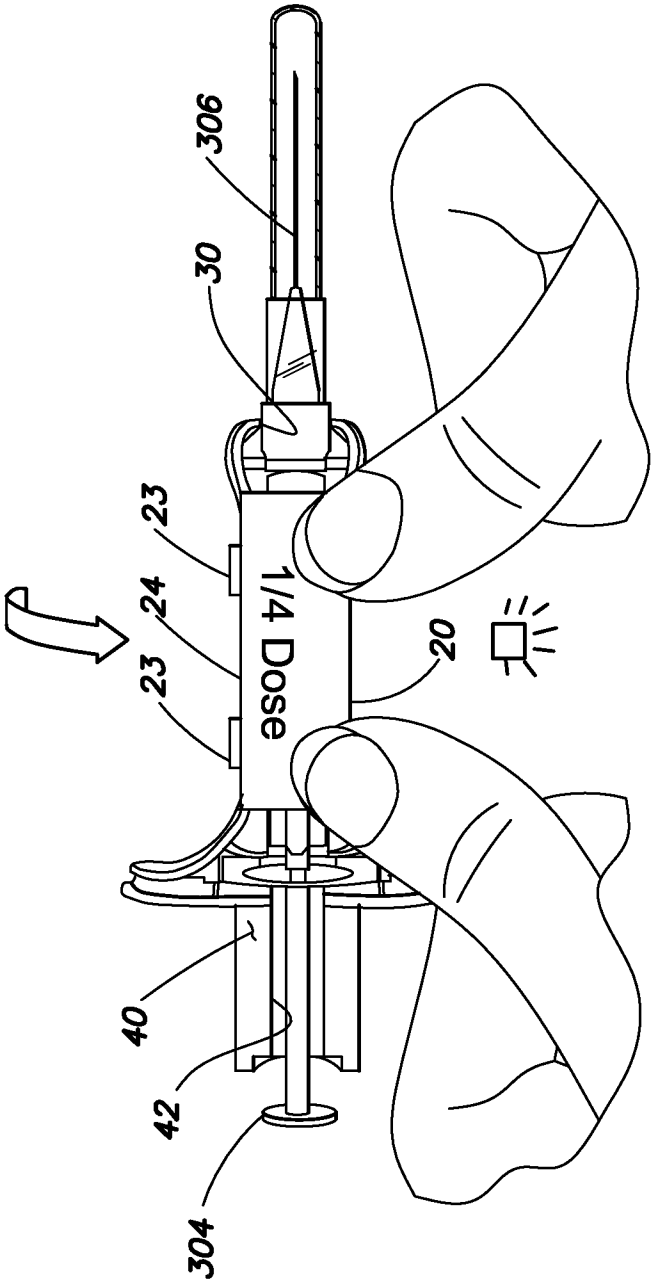
306
30
23
24
23
1/4 Dose
20
40
42
304

FIG. 5

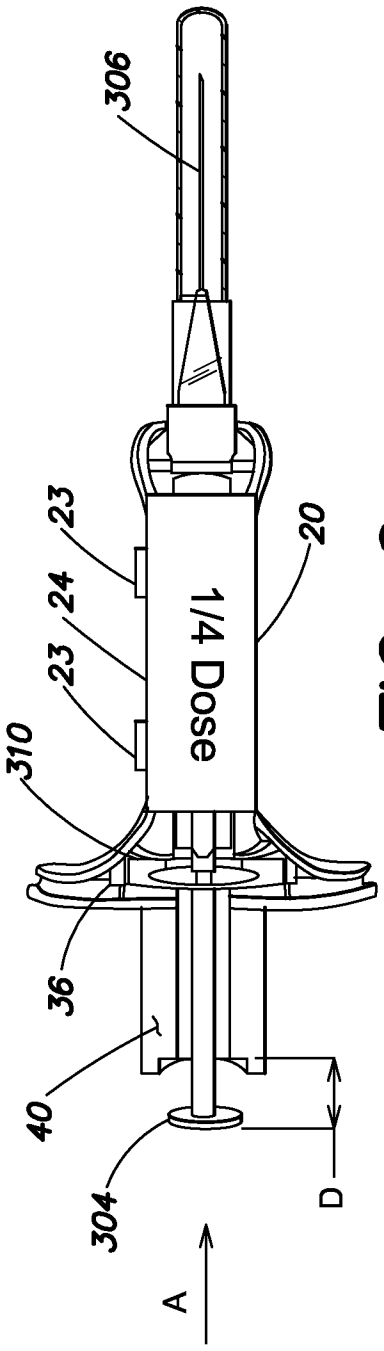
306
23
24
23
1/4 Dose
20
310
36
40
304
D
A

FIG. 6

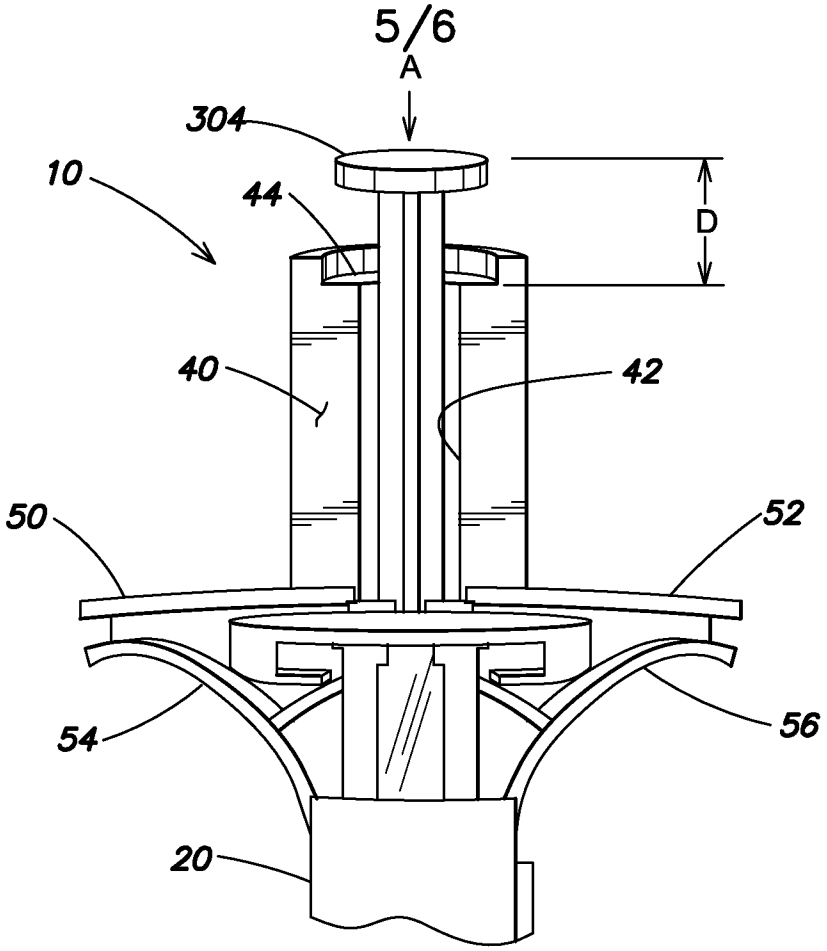

FIG. 7

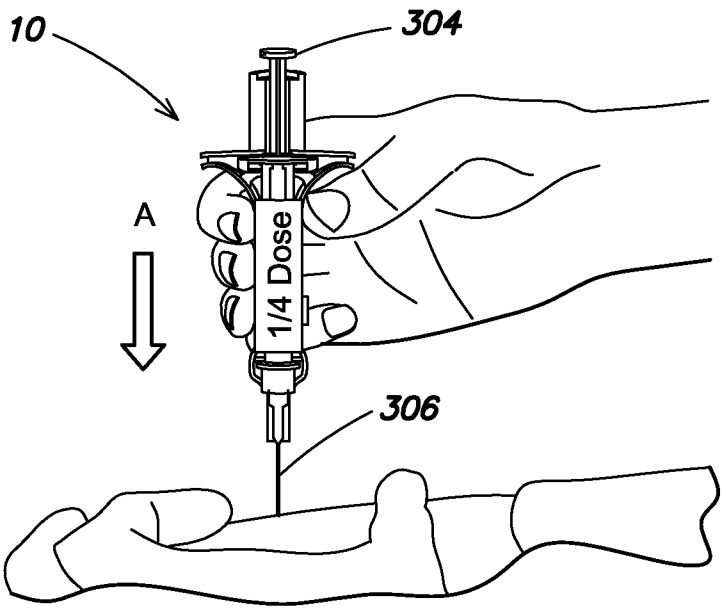

FIG. 8

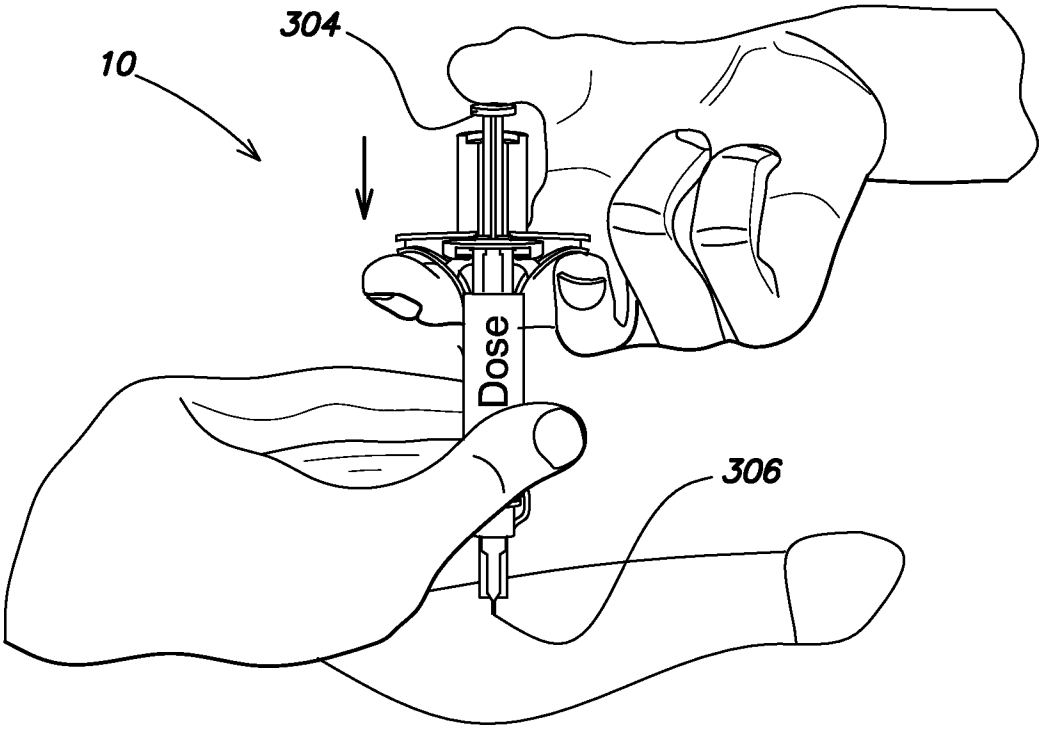

FIG. 9

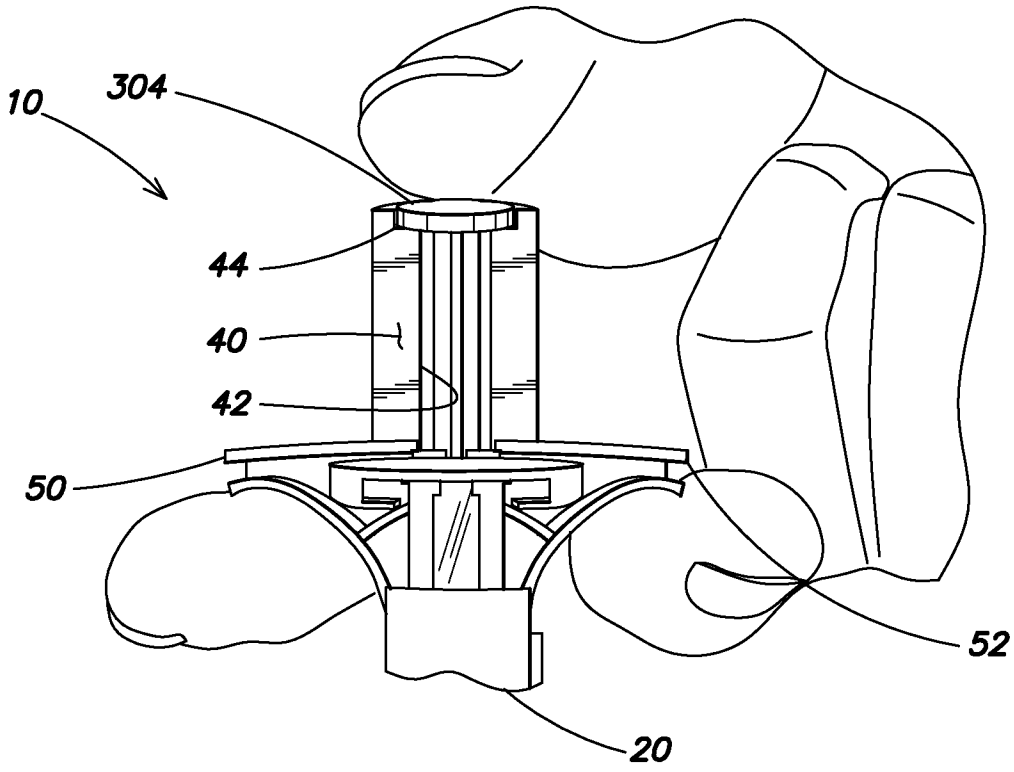

FIG. 10

INTERNATIONAL SEARCH REPORT

International application No
PCT/US2012/033739

A. CLASSIFICATION OF SUBJECT MATTER
INV. A61M5/315
ADD.

According to International Patent Classification (IPC) or to both national classification and IPC

B. FIELDS SEARCHED

Minimum documentation searched (classification system followed by classification symbols)
A61M

Documentation searched other than minimum documentation to the extent that such documents are included in the fields searched

Electronic data base consulted during the international search (name of data base and, where practicable, search terms used)
EPO-Internal, WPI Data

C. DOCUMENTS CONSIDERED TO BE RELEVANT

Category*	Citation of document, with indication, where appropriate, of the relevant passages	Relevant to claim No.
X A	US 2004/162528 A1 (HORVATH MICHAEL W [US] ET AL) 19 August 2004 (2004-08-19) paragraph [0041] - paragraph [0046]; figures 1-12	1-16 17-19
X	EP 0 904 792 A2 (BECTON DICKINSON CO [US]) 31 March 1999 (1999-03-31) figures 1-11 paragraph [0010] - paragraph [0022]	1-16
X	EP 1 702 636 A1 (CHIRON BEHRING GMBH & CO [DE]) 20 September 2006 (2006-09-20) paragraph [0018] - paragraph [0027]; figures 1-3	1-7, 12-19
A	US 5 975 355 A (CECALA ANN [US] ET AL) 2 November 1999 (1999-11-02) column 2, line 5 - line 54; figures 1-5	17-19

☐ Further documents are listed in the continuation of Box C.

☒ See patent family annex.

* Special categories of cited documents :

"A" document defining the general state of the art which is not considered to be of particular relevance

"E" earlier application or patent but published on or after the international filing date

"L" document which may throw doubts on priority claim(s) or which is cited to establish the publication date of another citation or other special reason (as specified)

"O" document referring to an oral disclosure, use, exhibition or other means

"P" document published prior to the international filing date but later than the priority date claimed

"T" later document published after the international filing date or priority date and not in conflict with the application but cited to understand the principle or theory underlying the invention

"X" document of particular relevance; the claimed invention cannot be considered novel or cannot be considered to involve an inventive step when the document is taken alone

"Y" document of particular relevance; the claimed invention cannot be considered to involve an inventive step when the document is combined with one or more other such documents, such combination being obvious to a person skilled in the art

"&" document member of the same patent family

Date of the actual completion of the international search	Date of mailing of the international search report
19 June 2012	28/06/2012

Name and mailing address of the ISA/	Authorized officer
European Patent Office, P.B. 5818 Patentlaan 2 NL - 2280 HV Rijswijk Tel. (+31-70) 340-2040, Fax: (+31-70) 340-3016	Knaus-Reinbold, S

INTERNATIONAL SEARCH REPORT

International application No.
PCT/US2012/033739

Box No. II Observations where certain claims were found unsearchable (Continuation of item 2 of first sheet)

This international search report has not been established in respect of certain claims under Article 17(2)(a) for the following reasons:

1. [X] Claims Nos.: 20-23
because they relate to subject matter not required to be searched by this Authority, namely:

see FURTHER INFORMATION sheet PCT/ISA/210

2. [ ] Claims Nos.:
because they relate to parts of the international application that do not comply with the prescribed requirements to such an extent that no meaningful international search can be carried out, specifically:

3. [ ] Claims Nos.:
because they are dependent claims and are not drafted in accordance with the second and third sentences of Rule 6.4(a).

Box No. III Observations where unity of invention is lacking (Continuation of item 3 of first sheet)

This International Searching Authority found multiple inventions in this international application, as follows:

1. [ ] As all required additional search fees were timely paid by the applicant, this international search report covers all searchable claims.

2. [ ] As all searchable claims could be searched without effort justifying an additional fees, this Authority did not invite payment of additional fees.

3. [ ] As only some of the required additional search fees were timely paid by the applicant, this international search report covers only those claims for which fees were paid, specifically claims Nos.:

4. [ ] No required additional search fees were timely paid by the applicant. Consequently, this international search report is restricted to the invention first mentioned in the claims; it is covered by claims Nos.:

Remark on Protest

[ ] The additional search fees were accompanied by the applicant's protest and, where applicable, the payment of a protest fee.

[ ] The additional search fees were accompanied by the applicant's protest but the applicable protest fee was not paid within the time limit specified in the invitation.

[ ] No protest accompanied the payment of additional search fees.

Continuation of Box II.1

Claims Nos.: 20-23

Claims 20 to 23 relate to a method for the injection of the medium. Said method is carried out within the human body. It is implicit that moving a plunger is to dispense the medium into a body is carried out into the human body (see description page 3 line 30 to page 4 line 1). Consequently, the method defined in claims 20 to 23 is considered as a method for the treatment of the human body by surgery and therapy. The application does not meet the requirement of Rule 39.1)iv), because these claims are methods of treatment of the human body.

INTERNATIONAL SEARCH REPORT

Information on patent family members

International application No
PCT/US2012/033739

Patent document cited in search report	Publication date	Patent family member(s)	Publication date
US 2004162528 A1	19-08-2004	AU 2004212945 A1	02-09-2004
		CA 2514850 A1	02-09-2004
		EP 1599166 A2	30-11-2005
		JP 2006517844 A	03-08-2006
		MX PA05008547 A	27-01-2006
		US 2004162528 A1	19-08-2004
		US 2008108952 A1	08-05-2008
		WO 2004073621 A2	02-09-2004
EP 0904792 A2	31-03-1999	DE 69834461 T2	19-04-2007
		EP 0904792 A2	31-03-1999
		JP 4170467 B2	22-10-2008
		JP 11151301 A	08-06-1999
		US 5951526 A	14-09-1999
EP 1702636 A1	20-09-2006	CA 2601656 A1	21-09-2006
		CN 101203254 A	18-06-2008
		EP 1702636 A1	20-09-2006
		EP 1907030 A1	09-04-2008
		JP 4857331 B2	18-01-2012
		JP 2008532665 A	21-08-2008
		US 2009318879 A1	24-12-2009
		WO 2006097492 A1	21-09-2006
US 5975355 A	02-11-1999	NONE	