Oct. 22, 1929. A. C. DURDIN, JR 1,732,577

MEANS FOR OPERATING ELECTRIC SWITCHES AND OTHER MECHANISM

Filed Dec. 29, 1926 2 Sheets-Sheet 1

Fig. 1.

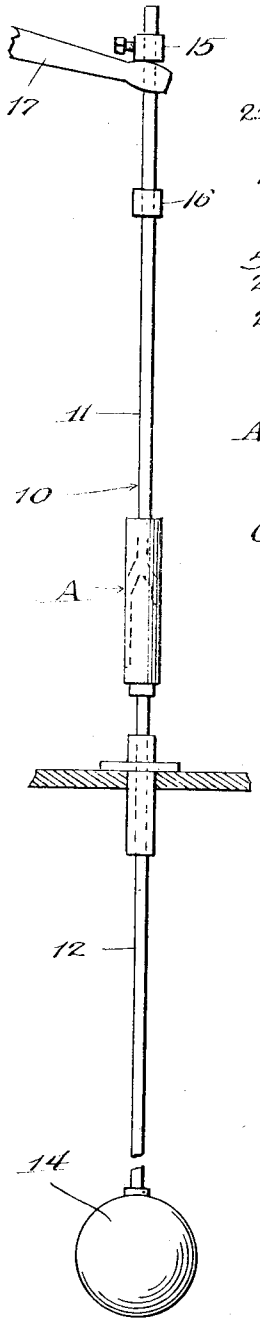

Fig. 2.

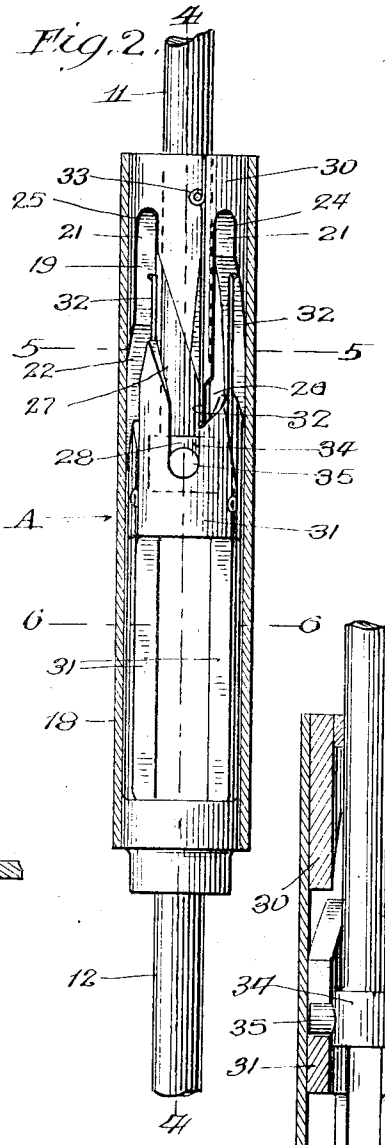

Fig. 3.

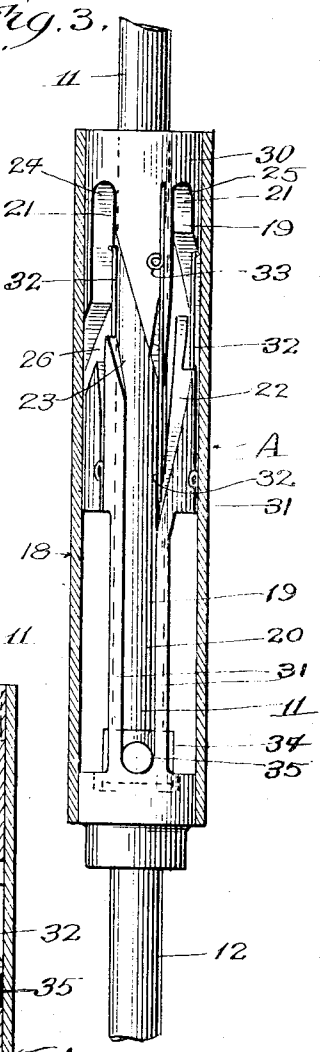

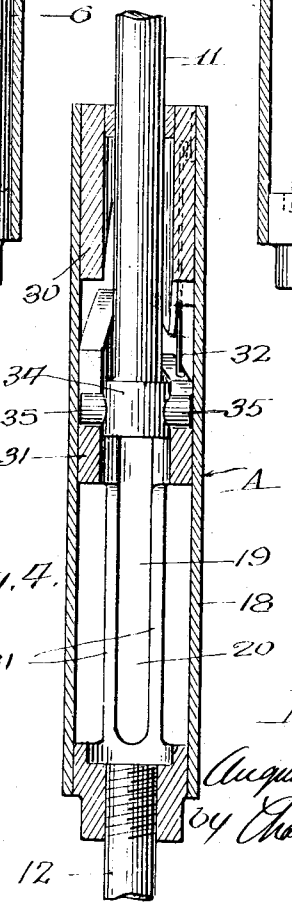

Fig. 4.

Inventor:
Augustus C. Durdin, Jr.,
by Charles G. Sherry
his Atty

Oct. 22, 1929. A. C. DURDIN, JR 1,732,577

MEANS FOR OPERATING ELECTRIC SWITCHES AND OTHER MECHANISM

Filed Dec. 29, 1926 2 Sheets-Sheet 2

Fig. 5.

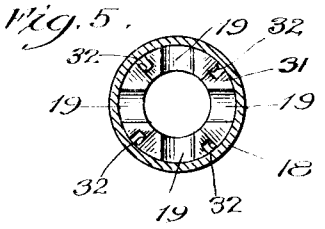

Fig. 6.

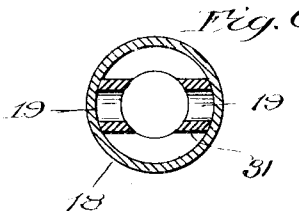

Fig. 7.

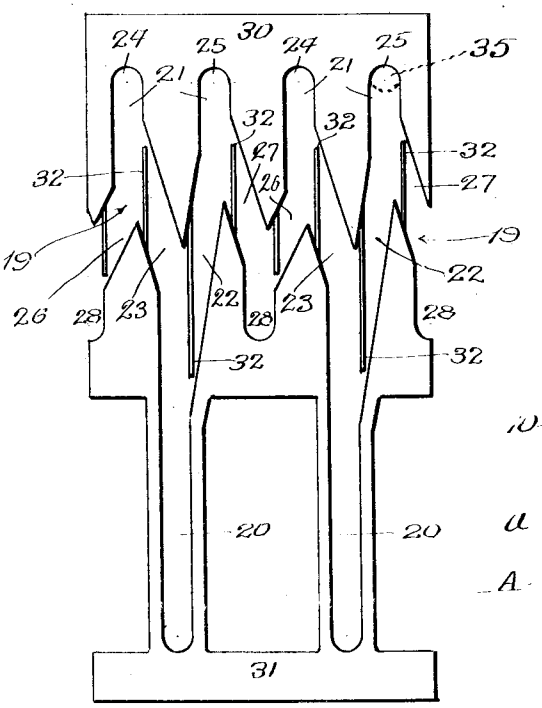

Fig. 8.

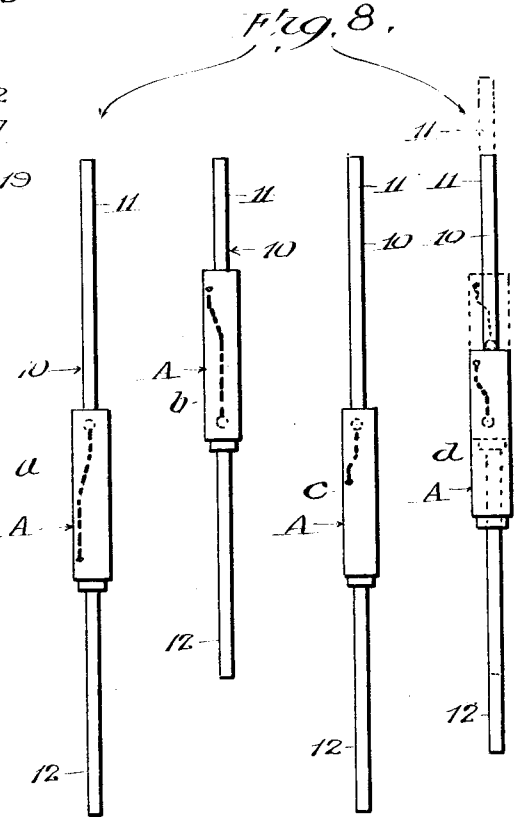

Fig. 9.

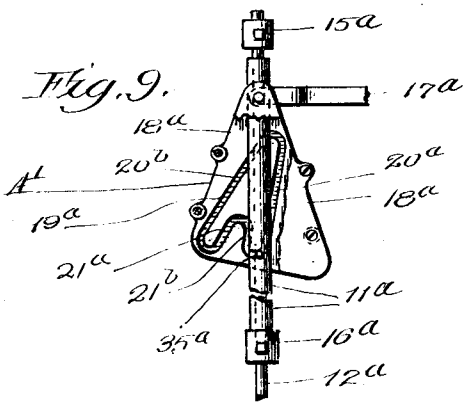

Inventor:
Augustus C. Durdin Jr.
by Raeder & Thorley
his Atty.

Patented Oct. 22, 1929 1,732,577

UNITED STATES PATENT OFFICE

AUGUSTUS C. DURDIN, JR., OF CHICAGO, ILLINOIS

MEANS FOR OPERATING ELECTRIC SWITCHES AND OTHER MECHANISM

Application filed December 29, 1926. Serial No. 157,856.

This invention relates to means for operating electric switches and other mechanism, and its principal object is to provide simple and improved means interposed between a float and its float rod and an electric switch lever, and constructed and arranged in such manner that certain of the strokes of the float rod will be effective in actuating the switch lever, for instance the alternate strokes will be effective and the intermediate strokes will be idle, or any other desired sequence of actuation may be obtained with the use of the present invention. This invention may be used in practically all, if not all, situations where a reciprocatory actuating member is required to actuate mechanism during certain strokes in a regular sequence. In its present form it has been designed for use in connection with the switches of electric motor operated pumps, in situations where two pumps are employed for discharging liquid from a well or other container, and where it is desirous of having the pumps operate alternately or in any other regular sequence.

The invention consists, therefore, in means interposed between the actuating member and the actuated member, and having a guide way or track formed of long and short sections, connected to one of said members, and a co-acting element such as a pin or roller connected to the other member and traveling in said guide way, and being acted upon, during alternate strokes, in the short section or actuated thereby in any other sequence. It further consists in means as above set forth in which the actuated member is acted upon by both sections of the guide way, but causing strokes of different lengths. The invention further consists in the novel features hereinafter fully set forth and claimed.

The invention is clearly illustrated in the drawings accompanying this specification, in which:

Fig. 1 is a side elevation of a simple embodiment of the invention applied to a float actuated switch rod; Fig. 2 is a view of the device upon an enlarged scale, partly in side elevation and partly in section, the case or enclosing wall being illustrated in section; Fig. 3 is a view similar to Fig. 2 but showing the parts in a different position; Fig. 4 is a vertical section taken on the line 4—4 of Fig. 2; Fig. 5 is a detail horizontal section taken on line 5—5 of Fig. 2; Fig. 6 is a detail horizontal section taken on line 6—6 of Fig. 2; Fig. 7 is a diagrammatic view of the guide way or track laid out flat; Fig. 8 is a diagrammatic view illustrating active and inactive positions of the device; and Fig. 9 is a side elevation, partly broken out, illustrating a slightly modified form of the invention.

Referring to said drawings and first to Figs. 1 to 8 inclusive, which illustrate one embodiment of the invention applied to a float operated switch rod, the reference character 10 designates a switch rod, composed of two sections 11, 12 connected together by the device A which forms the subject matter of this specification. Upon the lower end of the switch rod is a float 14 (see Fig. 1) and upon its upper end are buttons, collars, or other shoulders 15, 16, between which is one end of an electric switch actuating lever 17. The buttons 15, 16, may be spaced apart to leave lost motion between them and the lever which they actuate, or they may be placed close thereto so as to avoid lost motion as may be found desirable. Obviously any other equivalent form of connection may be substituted for the one shown between the upper section of the rod 10 and the lever 17 or other element which is to be actuated by said rod. The float may be contained in a well or other container into which liquid enters, and from which the liquid is to be discharged when it reaches a predetermined level therein. The section 12 of the rod 10 may be reciprocated by mechanism of any desirable sort, where the desideratum is to have the rod 10 actuate other mechanism during predetermined strokes of the rod and in a regular sequence.

Referring now to Figs. 2 to 7 inclusive, upon the upper end of the section 12 of the rod 10 is secured an enclosing wall 18, preferably in the form of a tube, in the hollow of which is a continuous guide way or track 19 (see Fig. 7) formed of long sections 20

and short sections 21, the long sections being straight as a preference and extending length wise of the rod. The short sections 21 of the guide way are somewhat of inverted W-shape in form having inclined parts 22, 23 which lead from the long sections, and join with short terminal parts 24, 25 that extend length wise of the rod and other inclined parts 26, 27 that join with the inclined parts 22, 23 and with a short terminal part 28 intermediate the long sections, but of considerably less length. The apexes formed by the inclined edges of the guide way are located opposite the length wise extending parts of the guide way and disposed toward one side edge thereof as is clearly seen in Fig. 7.

As a convenience in construction the guide way may be formed by milling or cutting the same out between the opposing ends of two tubular members 30, 31 and securing said shaped up members 30, 31 in the hollow of the tubular wall 18.

Conveniently, flexible switch points 32 may be secured to each apex end of the members 30, 31 which form the inclined parts of the guide way and said switch points may project across the inclined parts along lines running length wise of the rod. The switch points may be formed of pieces of flexible wire having a spring coil 33 formed therein, and the apex ends of the members 30, 31, may be milled out to receive and hold said wires and to permit them to play therein.

Upon the lower end of the upper section 11 of the rod is a head 34 from which projects radially, one or more pins 35 which travel in the guide way and are engaged by the terminal ends of the length wise extending portions thereof during the strokes of the lower section 12 of the rod. The arrangement of the guide way is such that when the upper terminal ends of the guide way engage the pins 35 the upper section of the rod may be drawn down to the lower limit of its stroke; that before the lower terminal ends of the long sections of the guide way engage the pins during the up stroke of the lower section of the rod, a certain amount of lost motion has taken place, whereby the up stroke of the rod at such time is idle or inactive, but that when the lower terminal ends of the short sections of the guide way engage the pins, during the up stroke of the lower section of the rod the upper and lower sections of the rod move as a unit and this is the effective stroke or the long stroke of the rod.

Referring to Fig. 7 and assuming the pin 35 in the position indicated by the dotted line in said figure and the rod at the lower end of its stroke. During the up stroke of the rod the pin passes through the inclined part of the guide way and into the long section. If the stroke of the lower section of the rod is equal to the distance between the top and bottom of the guide way, the pin is not raised any, but if the length of the stroke is greater than the distance between the top and bottom of the guide way, the pin and therewith the upper section of the rod are lifted a distance equal to the difference between the top and bottom of the guide way and the length of stroke of the lower section of the rod. On the down stroke of the lower section of the rod the pin passes from the bottom terminal end of the long section of the guide way, and into the upper terminal end of the next adjacent short section and when this position is reached the lower section of the rod is again at the lower limit of its stroke as before. On the succeeding up stroke the pin passes into the lower terminal end of the short section of the guide way during the initial part or commencement of the up stroke, and as the lower section of the rod continues on its upward movement, the lower end edge of the short section of the guide way raises the pin and therewith the upper section of the rod, and when the up stroke is carried to its end, the upper section of the rod is moved a distance farther than it was moved in the previous up stroke equal to the distance between the bottoms of the long and short sections of the guide way. It will be understood that the pin in passing from one section of the guide way into another, causes relative rotation between the pin and lower section of the rod.

The various positions where the effective ends of the guide way engage the pins are diagrammatically illustrated in Fig. 8. The stroke of the lower section of the rod in this case is equal to the distance between the top and bottom ends of the guide way. The dotted lines on the device A, indicate the section of the guide way in which the pin remains during the stroke. At *a*, the rod is at the lower limit of its stroke; at *b*, it is at the upper limit of its idle stroke; at *c*, at the lower limit of its succeeding down stroke and at *d*, (in full lines) at the place where the lower terminal end of the short section of the guide way engages the pin in its succeeding working up stroke. In dotted lines is illustrated the position the rod occupies at the upper limit of its working up stroke, and showing the distance the upper section has traveled relative to the lower one.

When the upper section of the rod is connected to a switch lever as in Fig. 1, the idle up stroke of the rod does not effect the switch lever of the switch operated by the rod. When two switches are employed, one may be operated by a float rod equipped with the device A and the other switch operated by another float rod, and by properly spacing the collars on the rods, the switch levers will be actuated alternately. As both rods rise under the influence of the rising water, the switch to one motor operated pump is closed when the water reaches a predetermined

level, whereas the other switch remains open, and during the succeeding up stroke the switch to the other motor pump is closed when the water reaches a different predetermined level, and the first one remains open. Thus the two pumps are permitted to operate alternately.

In the modified form of the invention illustrated in Fig. 9, the continuous guide way 19^a of the connecting device A^1 is formed in both of the pair of spaced, oppositely disposed plates 18^a, which are secured together by screws, rivets, or the like, and the pins 35^a are secured in a sleeve 11^a which surrounds the float rod 12^a and extends between the plates 18^a. A collar or other button 16^a is secured to the float rod, below the sleeve 11^a, and operates to raise said sleeve during the final portions of the upstroke of the float rod 12^a, and a second collar 15^a, is secured to the upper end of the float rod and operates to engage and depress the sleeve 11^a during the final portions of the downstroke of the float rod. A switch lever or other actuated device 17^a is secured to the upper end of the device A^1. The guide way 19^a, in each plate, is in the form of a cam groove and is formed of long sections 20^a, 20^b, and short sections 21^a, 21^b, connected by U bends, as shown, to form a continuous cam groove for the pins 35. The plates 18^a are so shaped or they are provided with weighted portions at their right hand sides, as viewed in Fig. 9, as to cause the device A^1, to normally assume a suspended position slightly to the left of that seen in Fig. 9, and the long sections of the cam grooves 19^a incline in an oblique direction crossing the axis of the float rod. As a result the pins 35^a, when moved upward by the float rod from the position shown in Fig. 9, travel upward through the long sections 20^a of the cam grooves and swing the entire device A^1 toward the left, and when the pins reach the upper end of the sections 20^a of the cam grooves, at the upper limit of the upstroke of the float rod, the device A^1 swings toward the right, and when the float rod descends, the pins 35^a travel down the long sections 20^b of the cam grooves, swinging the device towards the right, until the pins reach the lower end of the cam grooves, whereupon the device swings toward the left, permitting the pins to enter the short section 21^a of the cam grooves and travel up the same during the next upstroke of the float rod. During the remainder of the upstroke of the float rod, the device A^1 travels upward with the float rod and actuates the lever or device 17^a. When the collar 15^a of the float rod strikes the top of the sleeve 11^a during the downstroke of the float rod and said sleeve is thereby lowered, the device A^1 swings towards the left thereby permitting the pins 35^a to enter the short sections 21^b of the cam grooves and said pins thereupon travel down said short sections until the lower ends thereof are reached, whereupon the device A^1 swings to the left permitting the pins to travel up the long sections 20^a during succeeding upstroke of the float rod.

More or less variation of the exact details of construction is possible without departing from the spirit of this invention; I desire, therefore, not to limit myself to the exact form of the construction shown and described, but intend, in the following claims, to point out all of the invention disclosed herein.

I claim as new, and desire to secure by Letters Patent:

1. Means for transmitting motion from a float rod to a switch lever, comprising a tubular wall secured to the float rod and formed with a continuous cam groove disposed circumferentially about said wall and having relatively long and short sections extending approximately lengthwise of said float rod, a pin traveling in said cam groove and a connecting element between said pin and switch lever.

2. Means for transmitting motion from a float rod to a switch lever comprising a tubular wall secured to the float rod and formed with a continuous cam groove disposed circumferentially about said wall and having relatively long and short sections extending approximately lengthwise of said float rod, a connecting rod having a lost motion connection with said switch lever and a pin traveling in said cam groove.

3. Means for transmitting motion between a float rod and a switch lever, comprising a tubular wall secured to the float rod and formed with a continuous cam groove disposed circumferentially about said wall, and having relatively long sections and short sections extending in a direction lengthwise of said float rod and connected by oblique sections, a pin traveling in said cam groove, and a lost motion connecting element, between said pin and switch lever.

4. Means for transmitting motion between a float rod and a switch lever, comprising a tubular wall secured to the float rod and formed with a continuous cam groove disposed circumferentially about said wall, and having relatively long sections and short sections extending in a direction lengthwise of said float rod and connected by oblique sections, a connecting rod having a lost motion connection with said switch lever and a pin traveling in said cam groove, and flexible means associated with said cam groove for guiding said pin to travel in one circumferential direction through said cam groove.

5. In float operated electric switch actuating mechanism, the combination of the switch lever of an electric switch, a float and its float rod, and connecting mechanism between said float rod and switch lever, including mo-

tion transmitting means interposed in the float rod and having an active position for transmitting motion from the float rod to the switch lever when the float reaches a predetermined high level, said motion transmitting means having a secondary position for transmitting motion from the float rod to the switch lever when the float reaches a different predetermined high level and automatically operating means for setting said motion transmittting means into active and secondary positions in regular sequence.

6. Means for operating electric switches, comprising in combination, a float rod composed of upper and lower sections, one section capable of rotation about its axis, a float rigidly connected to the lower end of the lower float rod section and movable therewith as a unit, the upper float rod section being operatively connected with a switch lever, a connecting element secured to one float rod section and containing a continuous cam groove having long sections and short sections, and a co-acting connecting element secured to the other float rod section and traveling in said cam groove.

7. Means for operating electric switches comprising in combination, a float rod composed of upper and lower sections, one section capable of rotation about its axis, a float rigidly connected to the lower end of the lower float rod section and movable therewith as a unit, the upper float rod section having a lost motion connection with a switch lever, whereby the float rod may move idly as a whole for a predetermined distance, a connecting element secured to one float rod section and containing a continuous cam groove having long sections and short sections, and a co-acting connecting element secured to the other float rod section and traveling in said cam groove.

8. Means for operating electric switches comprising in combination, a float rod composed of upper and lower sections, one section capable of rotation about its axis, a float rigidly connected to the lower end of the lower float rod section and movable therewith as a unit, the upper float rod section being operatively connected with a switch lever, a connecting element secured to one float rod section, a co-acting element secured to the other float rod section, there being two spaced places of effective contact between said first mentioned and said second mentioned element, and co-acting means on said elements operating to rotate one upon the other when either is moved lengthwise relative to the other.

9. Motion transmitting mechanism comprising a reciprocatory actuating member, an actuated member, and automatically operating variable stroke connecting mechanism between said actuating and actuated members, comprising an element secured to one of said members, and having a continuous cam groove therein, formed with a long section, a short section, and sections connecting said long and short sections, and a co-acting element secured to said other member and traveling in said cam groove, there being flexible switch points in said cam groove, each secured at one end to said cylindrical element and extending across a connecting section and adapted to prevent retrograde movement of said co-acting element through said connecting section.

10. Motion transmitting mechanism comprising a reciprocatory actuating member, an actuated member, and automatically operating connecting mechanism between said actuating and actuated members, comprising an element secured to one of said members and having a continuous cam groove therein, formed with long sections and short sections extending in a direction substantially lengthwise of said element, and oblique sections connecting said long and short sections, and a co-acting element secured to said other member, and traveling in said cam groove, there being flexible switch points in said cam groove, each secured at one end to said grooved element and having its free end extending across an oblique section, and adapted to prevent retrograde movement of said co-acting element through said oblique section.

AUGUSTUS C. DURDIN, JR.