May 20, 1941. J. W. SMITH 2,242,663

MEANS AND METHOD OF SETTING UP EYEGLASSES, SPECTACLES, RIMLESS MOUNTINGS, AND LENSES

Filed Aug. 23, 1939 3 Sheets-Sheet 1

Fig. 1

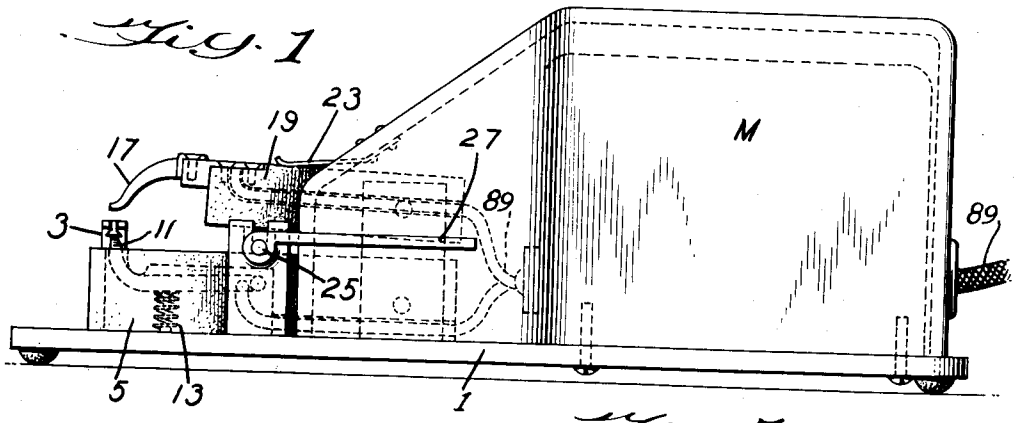

Fig. 5

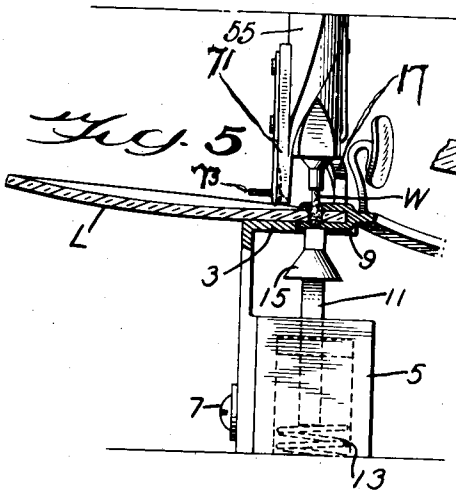

Fig. 7

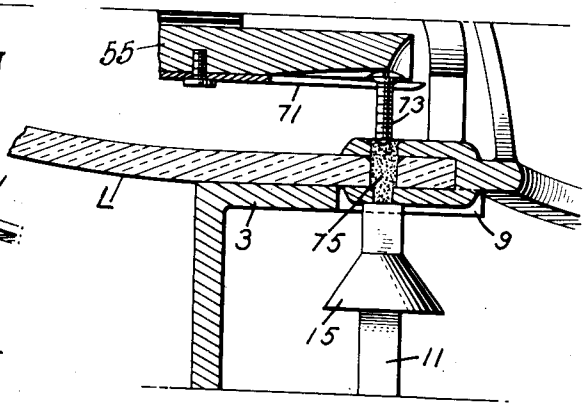

Fig. 6

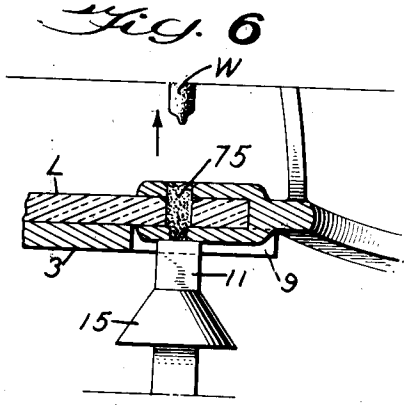

Fig. 8

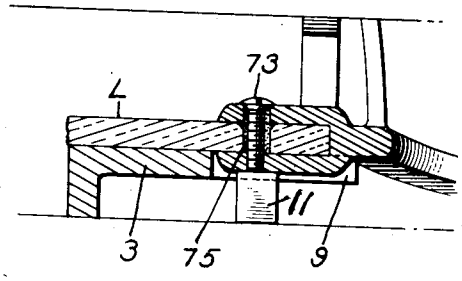

Inventor

Joseph W. Smith

By Vernon E. Hodges

H. Hamlin Hodges

his Attorneys

May 20, 1941. J. W. SMITH 2,242,663

MEANS AND METHOD OF SETTING UP EYEGLASSES, SPECTACLES, RIMLESS MOUNTINGS, AND LENSES

Filed Aug. 23, 1939 3 Sheets-Sheet 2

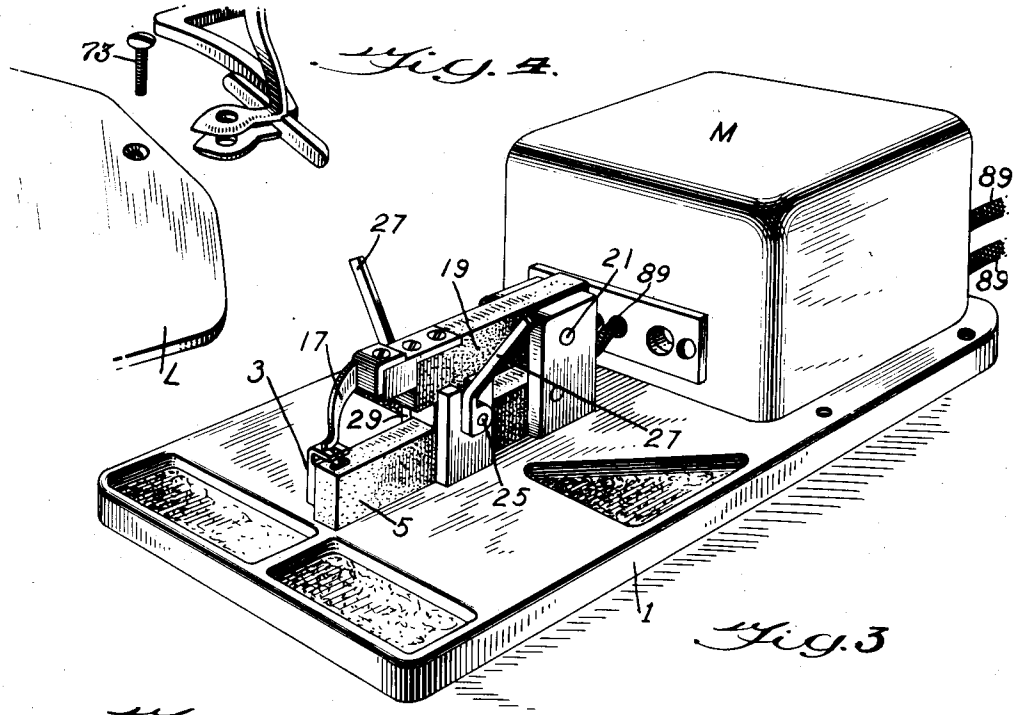

Fig. 4.

Fig. 3

Fig. 2

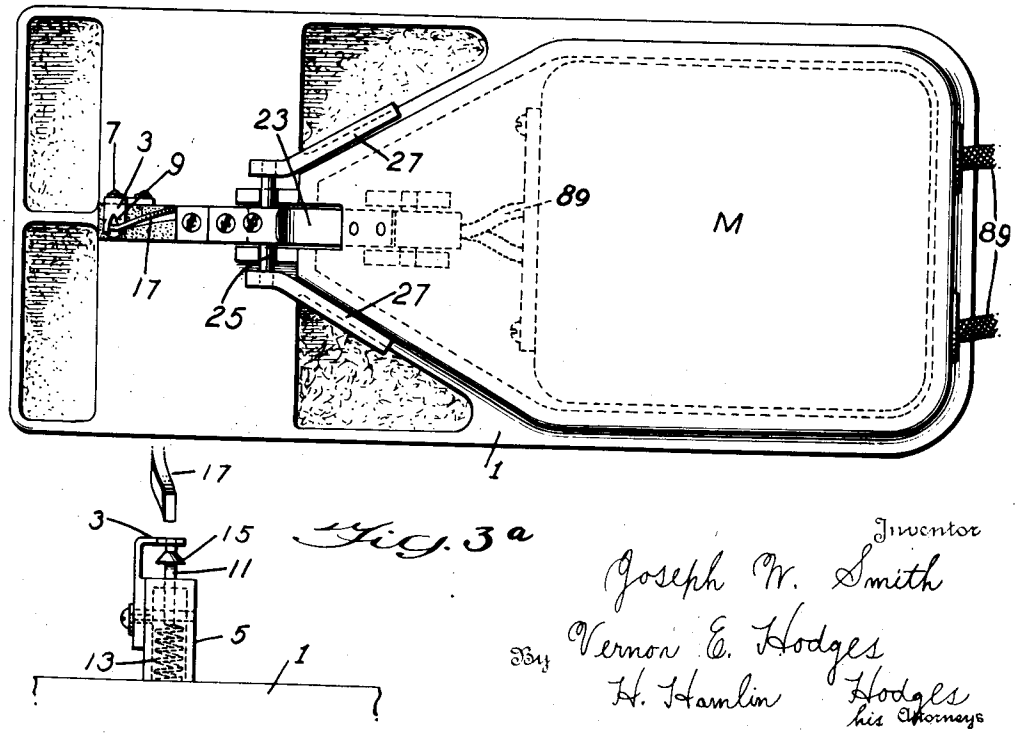

Fig. 3a

Inventor

Joseph W. Smith

By Vernon E. Hodges

H. Hamlin Hodges

his Attorneys

May 20, 1941. J. W. SMITH 2,242,663

MEANS AND METHOD OF SETTING UP EYEGLASSES, SPECTACLES, RIMLESS MOUNTINGS, AND LENSES

Filed Aug. 23, 1939 3 Sheets-Sheet 3

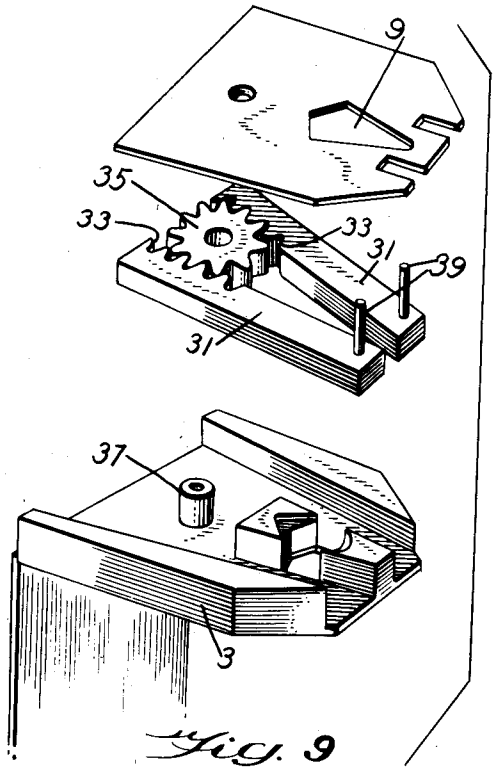

Fig. 9

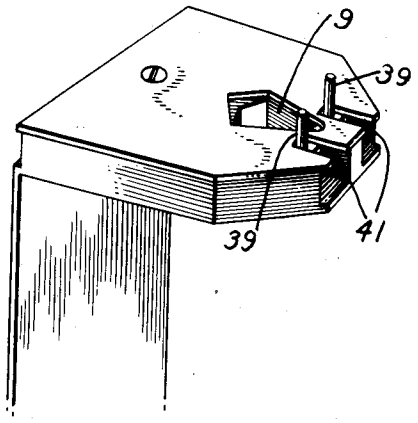

Fig. 10

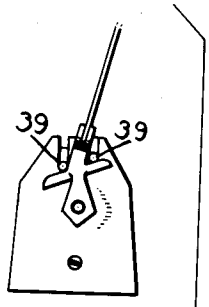

Fig. 11

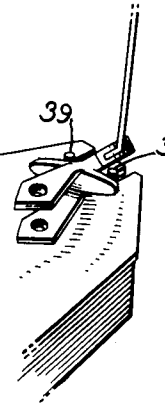

Fig. 12

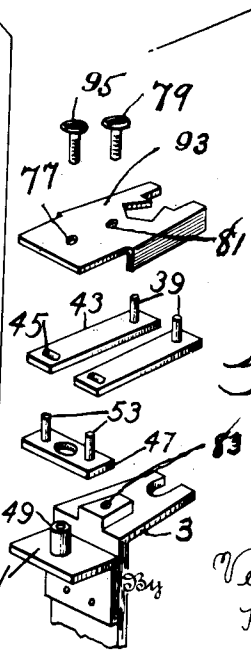

Fig. 13

Inventor
Joseph W. Smith
By Vernon E. Hodges
H. Hamlin Hodges
his Attorneys

Patented May 20, 1941

2,242,663

UNITED STATES PATENT OFFICE

2,242,663

MEANS AND METHOD OF SETTING UP EYEGLASSES, SPECTACLES, RIMLESS MOUNTINGS, AND LENSES

Joseph W. Smith, Cambridge, Ohio, assignor to Bausch & Lomb Optical Company, Rochester, N. Y., a corporation of New York

Application August 23, 1939, Serial No. 291,619

4 Claims. (Cl. 113—59)

My present invention relates to new and improved means and method of setting up eyeglasses, spectacles, rimless mountings and lenses.

A rimless spectacle mounting consists of a shoe and two straps. The straps are perforated, one perforation being threaded to receive a screw, the other being large enough to allow the body of the screw to pass through freely; and sometimes rivets are used in lieu of screws. The shoes press against the edges of the lens, while the straps grip the sides of the lens. The lens has a perforation to mechanically coincide with the holes in the straps of the mounting.

The optician sees to it that these holes are in perfect position after he has fitted the mounting snugly to the lens. The final step is to insert a screw through both strap and lens, turning until as tight as desired.

In recent years, a new fastening has been invented, doing away with screws for the purpose above-named. This new invention makes use of a rivet instead of a screw, and the rivet thus used is molded into place by and through the use of heat.

So wide-spread, and so well-nigh universal has the use of this rivet become, and so unsatisfactory has been the means for applying the rivets in the art of mounting rimless lenses, that some advance in this art was clearly needed.

I shall first show the steps taken in the past to insert a molded rivet through and into a spectacle mounting and lens:

First, the shoe and straps are fitted properly to the sides and edges of the lens with holes in alignment. The lens and mounting are now clamped in a heating unit, preferably having electrically induced heat. The optician now grasps with tweezers a rivet which is approximately one millimeter in diameter and seven millimeters long. The rivet is inserted into the apertures in strap and lens, a metal plunger is pressed down against the top end of the rivet, the tweezers are removed, and the heat is applied. The metal plunger presses the heated rivet into a circular recess at the bottom of the shoe, thus forming a concealed head on the rivet. The heat is then turned off. At this stage, the job would be weak and unsightly unless a head be provided for the exposed end of the rivet. So the inventor of the rivet further applied his skill to provide a finishing pin. This finishing pin does two things at one and the same time, to wit: it provides a "head" on the rivet at the exposed end, thus giving it sufficient strength, as well as adding a fancy finish to the job.

With my improved method of setting up molded rivet mountings a more simple and less costly electric heating machine is possible, because it is no longer necessary to have the heating unit equipped with plunger and other needless devices.

Contact against lower jaw is pivoted and movable. It is under spring tension which assures automatic, instantaneous, unfailing current flow to the point where heat is directed. This eliminates spark-burning or pitting the finely-polished gold surfaces of spectacle shoes. Electric wiring is completely insulated by being carried through longitudinal perforations in the jaws, each of which are made of non-conducting material.

A spring is essential to the useful operation of the upper jaw, forcing it rigidly down to hold the spectacle mounting as in a vise or clamp. This spring is attached to the housing, so that when and if the machine needs repair, the simple process of taking down the parts in itself releases the jaws facilitating adjustments or repairs to the jaws and the electric contacts.

An anvil is placed at a height from work-bench that is most convenient to accommodate the natural adaptation of the average worker in manual operations, by resting the forearm on the bench.

A cam is preferably used to raise and lower the upper or contact jaw and it is provided with two arms to suit right or left-handed operator. This cam is constructed to be removed by merely lifting it out of the machine if dismantling must be done at any time.

The self-adjusting contact lever-like arm is provided with an umbrella shield which prevents any molten metal from falling into the groove in which the arm operates. This is an important feature, as without this shield the machine would be fouled and operation become impossible.

Means for adjusting the lens and mounting accurately with respect to each other is also provided, so as to insure a perfectly tight and firm fastening means.

Trays are provided to hold pins, screws, rivets or other items used in such work. These trays are preferably lined with cushion material such as linoleum, or rubber.

In the accompanying drawings:

Fig. 1 is a view in side elevation of my improved machine;

Fig. 2 is a plan view of the same;

Fig. 3 is a view in perspective of a slightly different form of machine;

Fig. 3a is a fragmentary front elevation;

Figs. 4, 5, 6, 7 and 8 are fragmentary sectional views illustrative of different stages followed in securing the bridge and lens together;

Fig. 9 is a dismembered view in perspective of the several parts forming a gauge;

Fig. 10 is a view in perspective with these parts assembled; and

Figs. 11, 12 and 13 show a modified form of gauge.

The machine is represented by the letter M in Figs. 1, 2 and 3. Figs. 1 and 2 represent the preferred form.

The base 1 supports the body of the machine, and is extended at one end to afford support for the novel parts of my invention. A support 3 is secured to a block of insulating material 5, such as Bakelite or the equivalent. This support may be detachably secured in place, as by screw 7 or in any approved manner, so that it may be easily replaced. In the support 3, a recess or clearance space 9, preferably diamond-shape, is provided, and this is fashioned to receive and fit the lowermost strap of the shoe, as viewed in Figs. 5, 6, 7, 8, 9 and 10.

An anvil 11 is movably supported in the insulating block 5 and is normally held in an elevated position by the spring 13, as shown in Fig. 3a. This anvil 11 constitutes an electric contact and is in the main circuit. To protect the parts below from fused material W, the cone 15 is provided as a guard. The upper contact 17 for closing the circuit through the mounting and to the anvil 11 is supported on the outer end of a bar of insulating material 19, which is fulcrumed as a lever on the pin 21, and in the construction illustrated in Fig. 1, a spring 23 tends to and normally forces this entire element downwardly, so that the upper contact 17 closes the circuit through the mounting when permitted to do so. To break the circuit, the cam-shaft 25 is rocked by manipulating either one of the levers 27 accordingly as the operator is right or left-handed, or according to his convenience. The cam shaft carries a cam 29 which turns against the lower surfaces of the insulating block 19 and acts against the downward pressure of spring 23 when it is desired to raise the contact 17 and break the circuit, as shown in Figs. 1 and 2, or the weight of the element 19 in the machine shown in Fig. 3.

When the contact 17 is lowered, the position of the levers 27 is substantially as indicated in Figs. 2 and 3, but when the contact 17 is raised out of the way and to break the circuit, these levers are pushed back to a more nearly horizontal position, as represented in Fig. 1.

Wires 89 conduct the current to the contacts, and it is customary to provide a switch (not shown) on the floor which the operator can control with one foot.

Among other things, my invention contemplates means for accurately and securely holding and gauging the shoe of the mounting while it is being attached to the lens, and various mechanical means may be employed to accomplish this in an efficient manner. Two such means are illustrated in Figs. 9 to 13. In the construction shown in Figs. 9 and 10, two bars 31 are housed and slidably mounted within the head of the support 3. These bars have teeth 33 on a portion of their inner edges, and a toothed wheel 35 is mounted to turn freely on the stud 37, between these slidable bars 31 with its teeth meshed with the teeth 33 of these bars. These bars have upstanding pins 39, which extend through the open slots 41 in te head of the support 3, and in which they are freely slidable simultaneously in alternate directions and in accordance with the angle of the shoes of the mounting, thus acting as a gauge as well as an equalizing stop against which the pressure of the braces is exerted while the mounting and lens L are being secured together.

In the construction shown in Figs. 11, 12 and 13, in lieu of the toothed bars and toothed wheel, the bars 43 are provided with transversely elongated holes 45 at one end and the upstanding pins 39 in their outer ends. A rocker 47 turns on a post 49 on a bracket 51 on the back of the support 3, and this rocker 47 has studs 53 on opposite sides of the center pivot, which studs extend loosely through the elongated holes 45 in the bars 43. The top plate 93 fits over the support 3 after the plates 43 have been connected with the rocker 47, whereupon screw 95 is inserted through hole 77 in the top plate and thence screwed down in the hole in post 49, and screw 79 is inserted through hole 81 in the top plate 93, and screwed into the hole 83 in the top of the support 3.

With this construction, the bars 43 slide simultaneously endwise in opposite directions when the pins 39 are pressed against the shoe of the mounting, thereby automatically adjusting themselves to the position and shape of the shoe, thus functioning as a gauge as illustrated in Figs. 11 and 12.

Obviously, means other than those illustrated in Figs. 9 and 13 might be employed to accomplish the same purpose, which is to brace the shoe of the mounting against the pins 39, as this allows sufficient pressure to hold the lens edge against the shoe of the mounting, making a strong attachment. In other words, the function of the pins 39 is to hold the job very tightly without a chance of the lens slipping out of the mounting during the process of inserting either pins, rivets or screws, whichever are used. It also makes it possible to hold the shoe against the lens edge by pushing the job against the pins, thus insuring a tight job that will not wobble.

While I have termed the element 11 an anvil since it performs the function of what has hitherto been termed an anvil, nevertheless, it should be clearly understood that the element 11 is not a rigid anvil, but on the contrary it is yieldable to pressure and is spring-actuated as heretofore described, and it may be pivotally supported as shown in Fig. 1, or slidably supported as illustrated in Figs. 3a, 5, 6, 7 and 8. In a machine of the character described, it is important that this anvil 11 should have the double function of maintaining an electrical circuit at all times through the straps of the mounting, and at the same time yield to the pressure of a screw, pin or rivet if the latter contacts it and presses against it, when forced into its final position, thus avoiding the danger of breaking the lens which is almost certain to result from the use of a rigidly placed and unyielding anvil.

The present construction provides every advantage of a fixed anvil with the added advantage which a spring-actuated anvil contact will provide against breaking or impairing the frangible lens during the process of securing the lens and mounting together. This construction also insures that the fastening means will always pass directly through the center of the aligned holes in the straps and lens with precision and with-

out danger of tilting to one side in either direction.

The spring-actuated character of this anvil has another advantage. Unless this movable anvil contact yields or gives to pressure from the driven pin or screw in operation, the entire mounting and lens would forcibly rise against the vise-like clamp provided by the contact **17**, causing breakage of the job, and whether of the lens or straps it would make no difference since any breakage or distortion of parts would ruin the job.

My improved yieldable anvil has still another advantage, it being spring-actuated it automatically accommodates itself to straps of varying thickness which are present in different makes and styles of mountings.

My yieldable anvil has the added function of furnishing a closure beneath the holes which prevents the escape and loss of fusible material.

The adjustable stop gauge provides dependable means for automatically gauging the parts to be fastened together, serving both as a stop and a gauge, assuring absolute precision.

The upper end of the fastening means is always accessible to the employment of the tools to be used in finishing the fastenings.

Operation.—To carry out my improved method of fastening the shoes to the lenses, the edge of the lens is first slid between the straps. By reference to Fig. 4, the positioning of the parts just prior to fitting them together is illustrated. Thus assembled, with holes in straps and lens in alignment, they are placed in the machine as shown in Fig. 5. Levers **27** are then pulled forward to the position shown in Figs. 2 and 3, and the mounting is clamped between the support **3** and the contact **17** and the anvil **11**, making a complete metallic contact between said parts. The fusible material W, in cylindrical or other form, may be fed into the aligned holes from a holder **55** or other suitable means, as shown in Fig. 5. When the operator closes the electrical circuit the fusible material W is rendered molten adjacent the holes in the mounting and when the holder **55** is drawn away from the mounting, a supply of fusible material **75** is left in the openings of the lens and mounting as shown in Fig. 6. While the material **75** is still in a molten condition, the pin, screw or rivet **73**, carried by the spring claw **71** on holder **55**, may be inserted as shown in Figs. 7 and 8. If a screw, such as **73**, is used, it may be driven down tight in the fusible material at the proper moment just before it has entirely set, the anvil **11** by reason of its spring support yielding to the pressure of the pin, rivet or screw, should its lower end protrude beyond the surface of the strap without breaking the circuit.

The machine is so constructed that a screwdriver or other tool may be employed without interference with any part of the machine.

When the adjustable stop-gauge is used, it takes the place of the replaceable support **3** shown in Figs. 1, 2, 3, 3*a*, 5, 6, 7 and 8.

Obviously, this machine lends itself as a means either to set up or to take down rimless mountings and lenses; in other words, it is adaptable both to assembling the numerous parts and also to disassembling them.

I claim:

1. Means for setting up eyeglasses, spectacles, rimless mountings and lenses including a support, and a self-adjusting stop gauge movably connected with said support adapted to be engaged by a part of the mounting during the fusing operation, whereby the mounting is firmly held in place, said adjustable stop including alternately movable means against which the braces of the mounting are pressed.

2. Means of providing as a workable adjunct to a heated table including an anvil, clamp, and a stop-gauge automatically adjusting itself to hold rimless shoes at any angle from naught to forty-five (0 to 45°) degrees in either right or left positions while pressure is exerted to hold holes in alignment while screw, pin or rivet is being inserted into fused material to hold lens and mounting together.

3. In a machine for assembling rimless spectacle mountings on lenses, the combination of a support having a seat adapted to receive the mounting, a self-adjusting stop gauge carried by said support, said stop gauge comprising a pair of spaced, upstanding pins movably mounted adjacent said seat, and means for moving said pins so that the distance from either pin to said seat may be selectively varied while maintaining a fixed distance between the two pins.

4. Means for assembling rimless spectacle mountings and lenses comprising a support having an opening adapted to receive the mounting and a stop gauge carried by said support, said stop gauge comprising a pair of spaced, upstanding pins against which the shoe of the mounting is adapted to be positioned, said pins being movably mounted adjacent said opening and so constructed and arranged that a line connecting said pins may be adjusted at various angles to the longitudinal axis of said opening while maintaining a fixed distance between the pins.

JOSEPH W. SMITH.