US 20060206237A1

(19) **United States**

(12) **Patent Application Publication** (10) **Pub. No.: US 2006/0206237 A1**

Morisada (43) **Pub. Date: Sep. 14, 2006**

(54) **ANTI-VIBRATION TECHNIQUE**

(75) Inventor: **Masahiro Morisada**, Utsunomiya-shi (JP)

Correspondence Address:
FITZPATRICK CELLA HARPER & SCINTO
30 ROCKEFELLER PLAZA
NEW YORK, NY 10112 (US)

(73) Assignee: **CANON KABUSHIKI KAISHA**, Tokyo (JP)

(21) Appl. No.: **11/432,619**

(22) Filed: **May 12, 2006**

Related U.S. Application Data

(62) Division of application No. 11/249,458, filed on Oct. 14, 2005, now Pat. No. 7,069,114, which is a division of application No. 10/987,029, filed on Nov. 15, 2004, now Pat. No. 7,024,284.

(30) **Foreign Application Priority Data**

Nov. 17, 2003 (JP) 2003-386349

Publication Classification

(51) **Int. Cl.**
G01M 1/38 (2006.01)

(52) **U.S. Cl.** **700/280**

(57) **ABSTRACT**

A supporting apparatus includes a supporting member configured to support a movable member, an acceleration sensor configured to detect acceleration of the supporting member, an actuator configured to drive the supporting member, a memory configured to memorize offset data for the acceleration sensor, an offset unit configured to offset an output of the acceleration sensor in accordance with the offset data in the memory, a discrimination unit configured to discriminate whether the offset data should be renewed or not on the basis of an output of the acceleration sensor, and a renewing unit configured to renew the offset data on the basis of the result of the discrimination made by the discrimination unit.

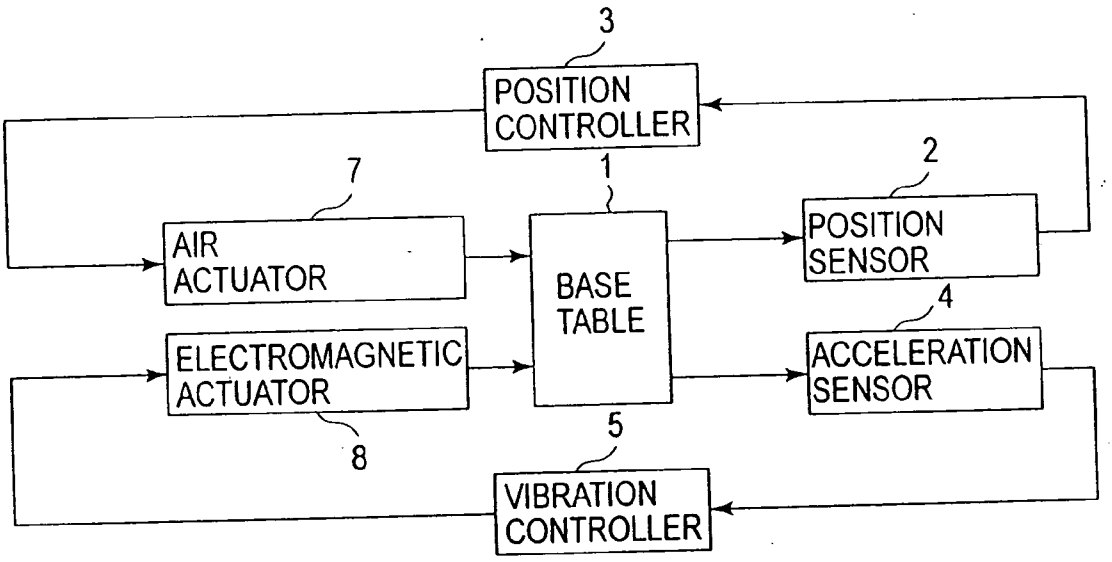

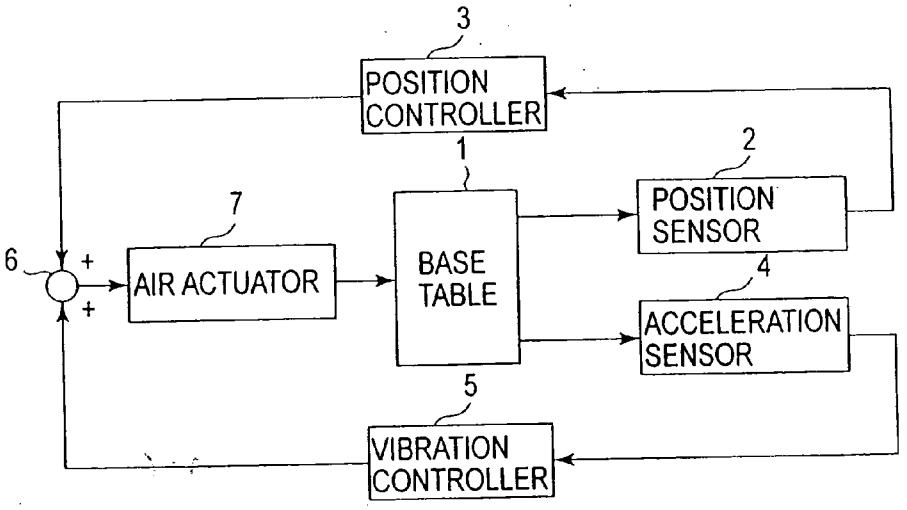
3
POSITION CONTROLLER
1
2
POSITION SENSOR
7
6
+
+
AIR ACTUATOR
BASE TABLE
4
ACCELERATION SENSOR
5
VIBRATION CONTROLLER

FIG.1

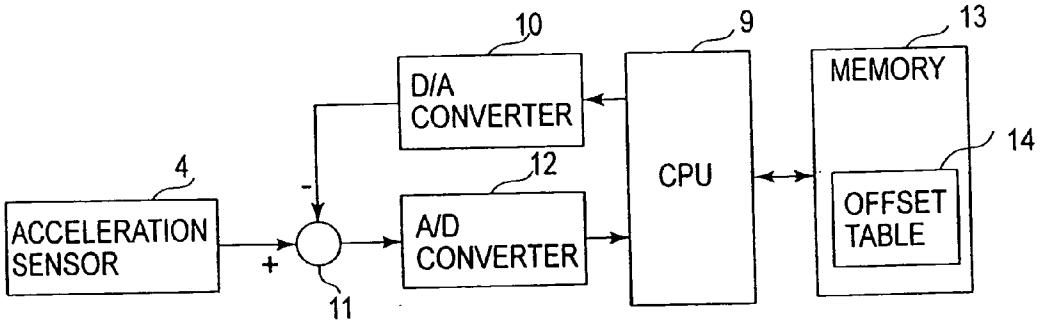
10
9
13
D/A CONVERTER
MEMORY
14
4
12
CPU
OFFSET TABLE
-
ACCELERATION SENSOR
+
A/D CONVERTER
11

FIG.2

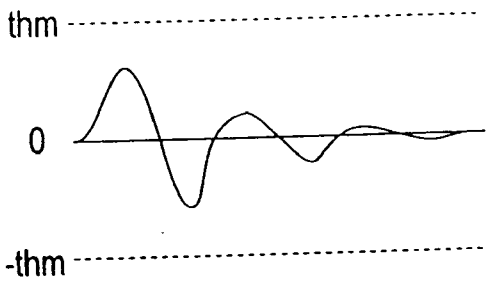

FIG.3A

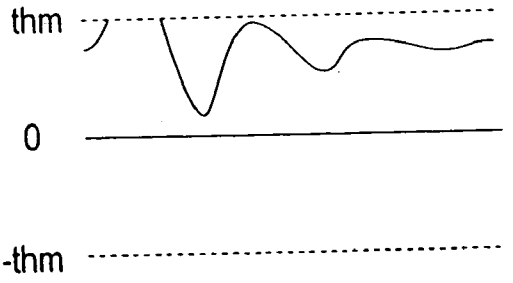

FIG.3B

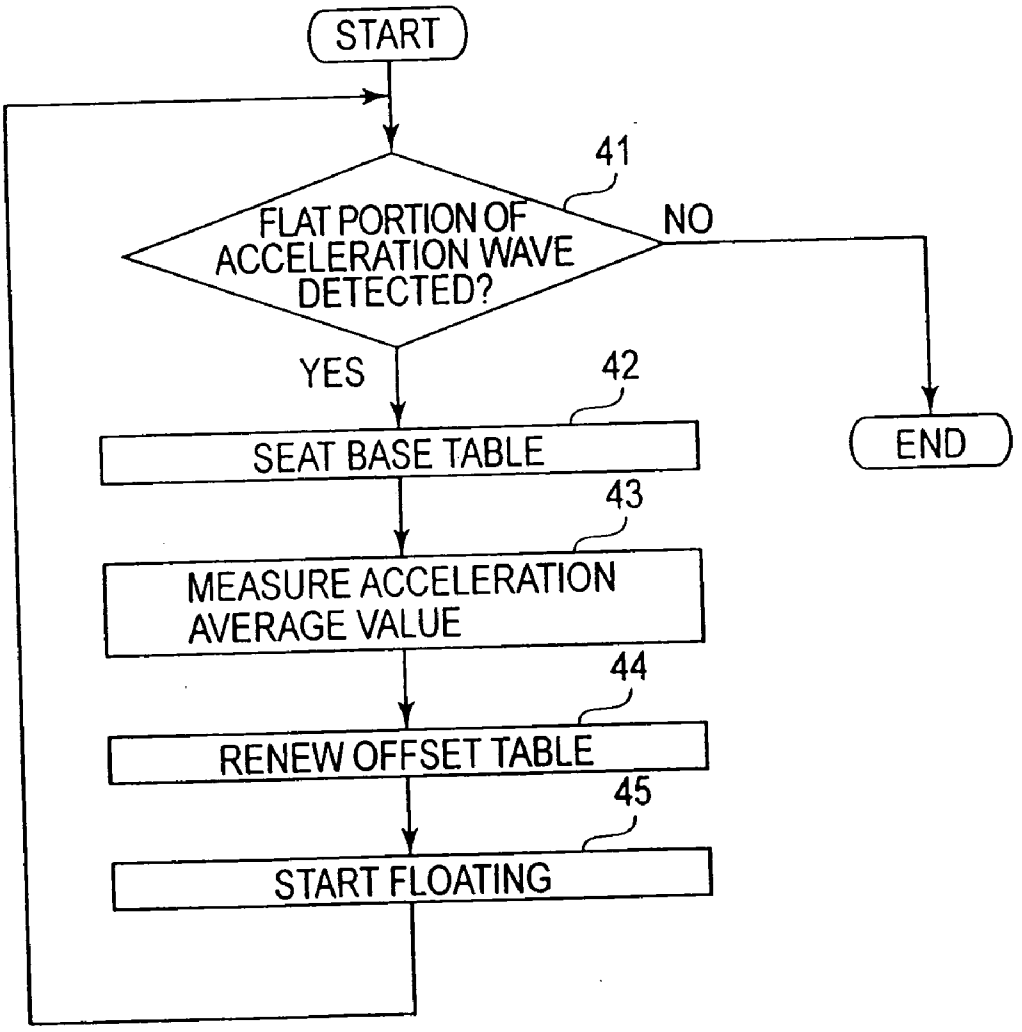
START
41
FLAT PORTION OF ACCELERATION WAVE DETECTED?
NO
YES
42
SEAT BASE TABLE
END
43
MEASURE ACCELERATION AVERAGE VALUE
44
RENEW OFFSET TABLE
45
START FLOATING

FIG.4

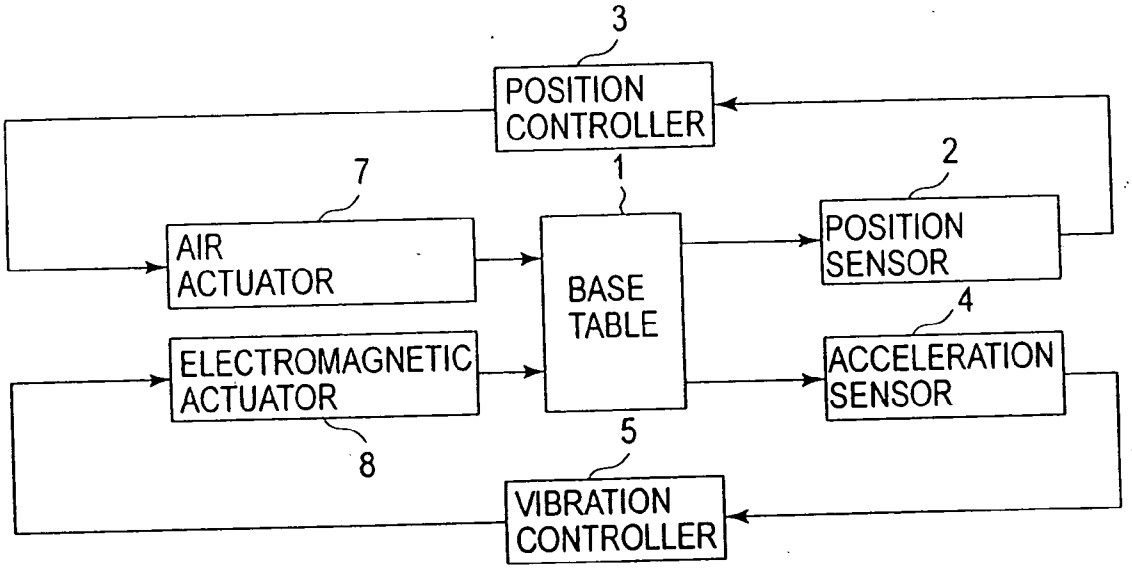
3
POSITION CONTROLLER
7
1
2
AIR ACTUATOR
BASE TABLE
POSITION SENSOR
4
ELECTROMAGNETIC ACTUATOR
ACCELERATION SENSOR
8
5
VIBRATION CONTROLLER

FIG.5

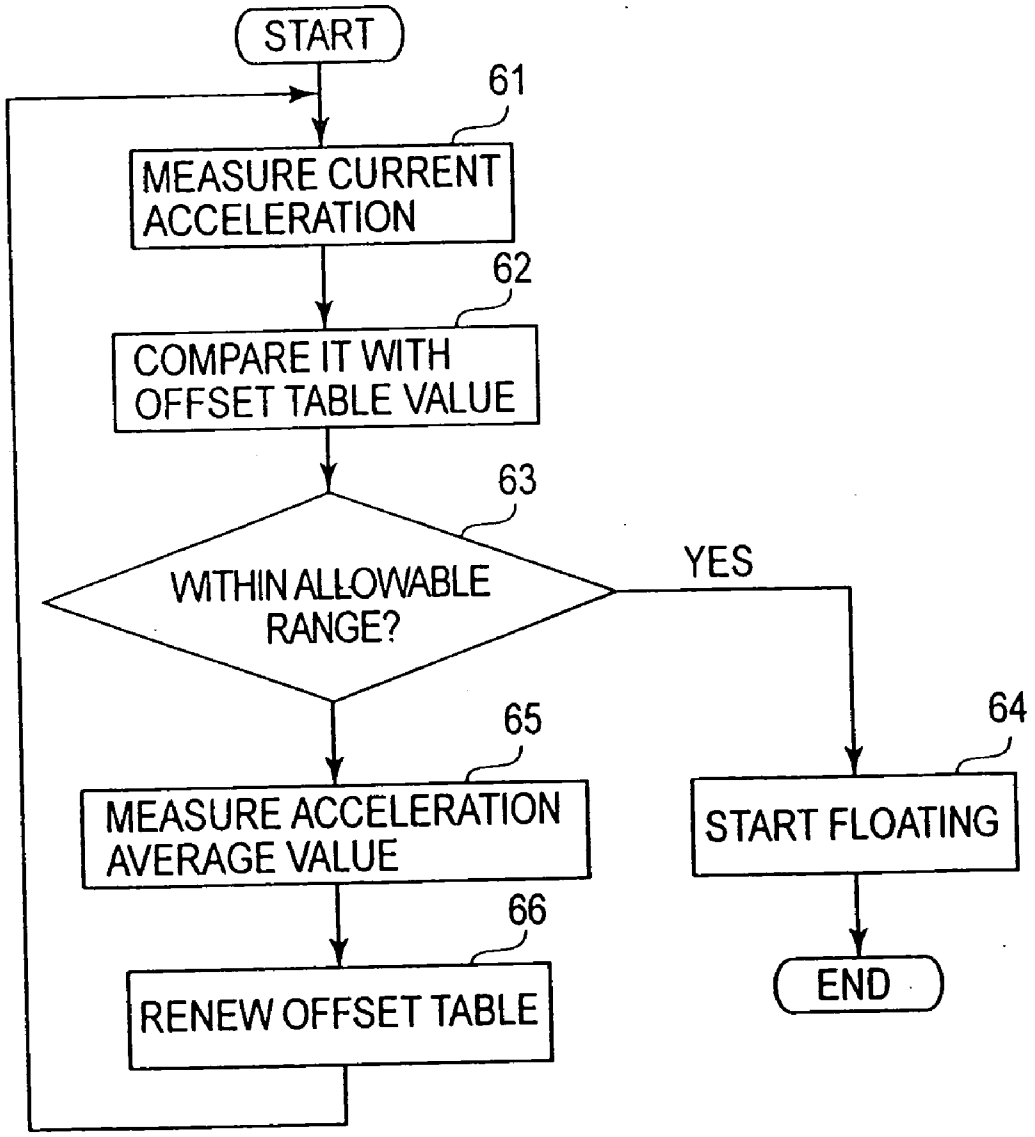
START
61
MEASURE CURRENT ACCELERATION
62
COMPARE IT WITH OFFSET TABLE VALUE
63
WITHIN ALLOWABLE RANGE?
YES
65
MEASURE ACCELERATION AVERAGE VALUE
66
RENEW OFFSET TABLE
64
START FLOATING
END

FIG.6

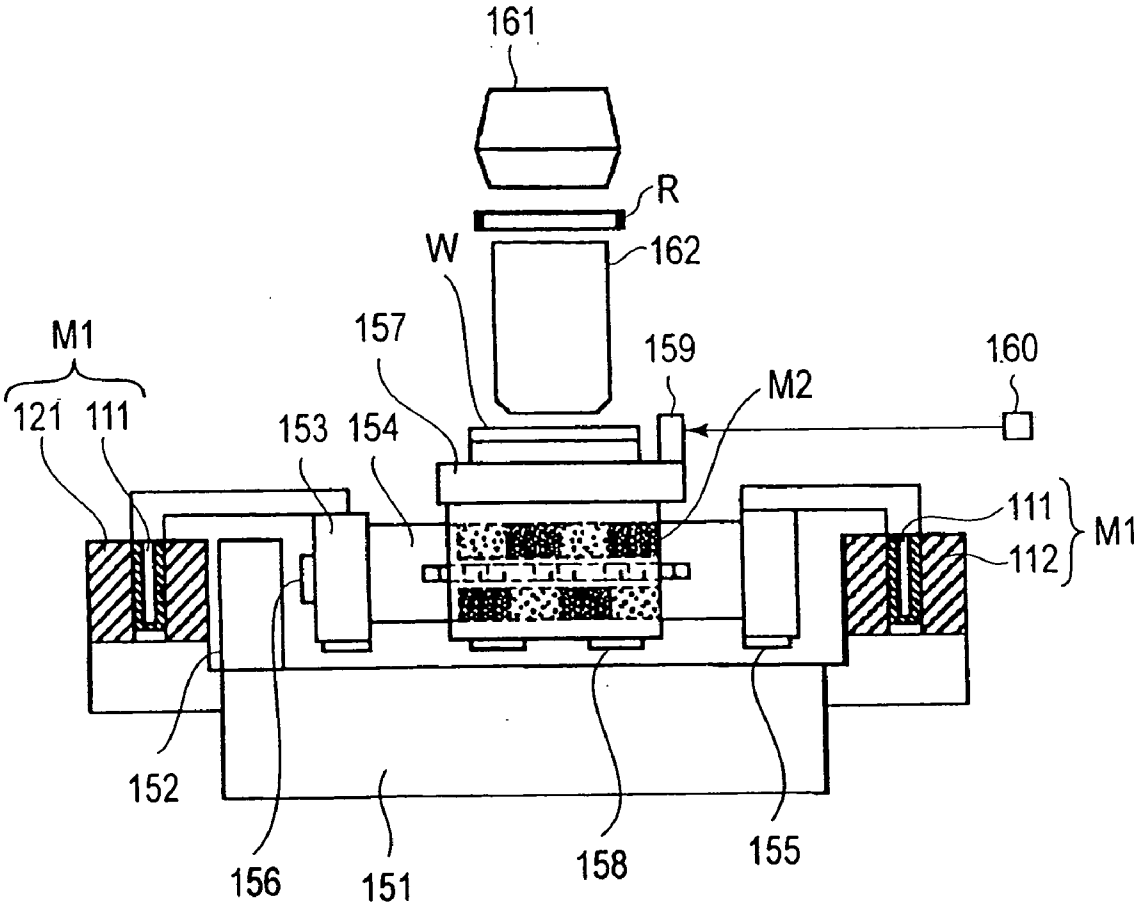
161
R
W
162
M1
157
159
160
121
111
153
154
M2
111
M1
112
152
156
151
158
155

FIG.7

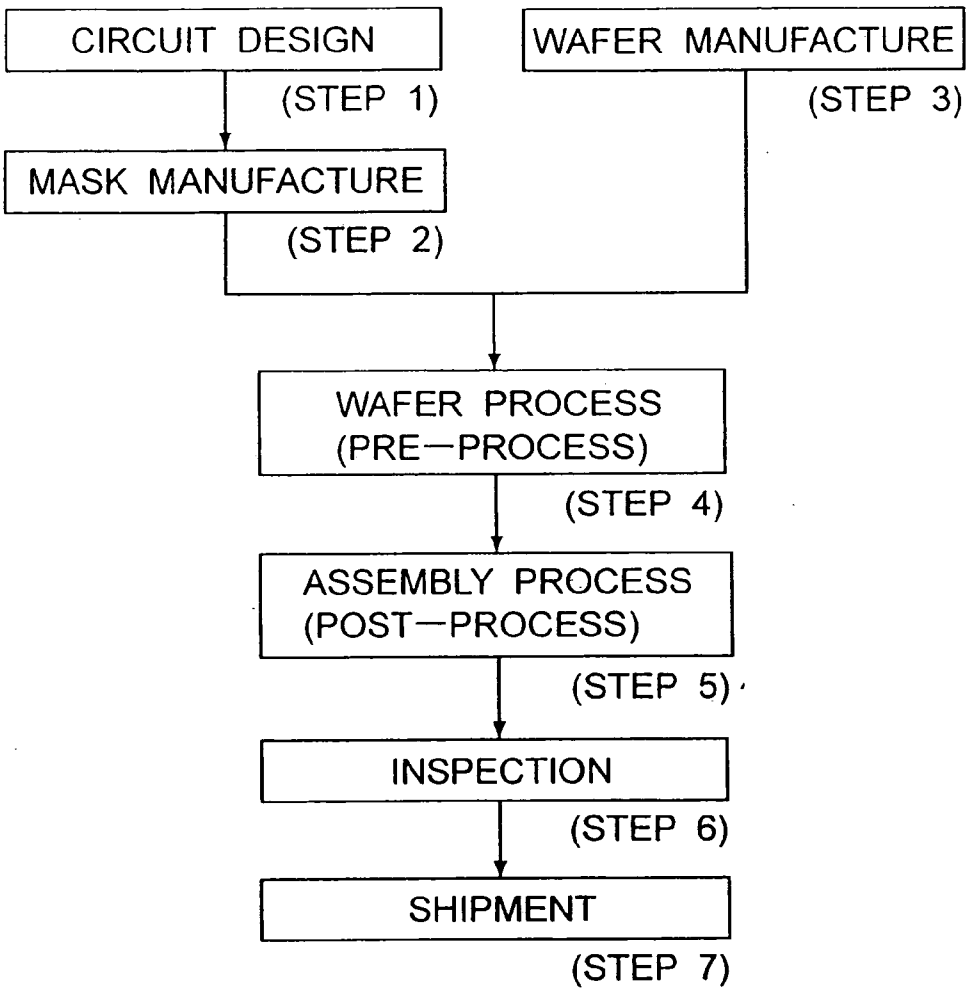
CIRCUIT DESIGN
(STEP 1)
WAFER MANUFACTURE
(STEP 3)
MASK MANUFACTURE
(STEP 2)
WAFER PROCESS
(PRE—PROCESS)
(STEP 4)
ASSEMBLY PROCESS
(POST—PROCESS)
(STEP 5)
INSPECTION
(STEP 6)
SHIPMENT
(STEP 7)

FIG.8

ANTI-VIBRATION TECHNIQUE

[0001] This application is a divisional application of copending U.S. patent application Ser. No. 11/249,458, filed Oct. 14, 2005, which is a divisional application of U.S. patent application Ser. No. 10/987,029, filed Nov. 15, 2004, now U.S. Pat. No. 7,024,284, issued Apr. 4, 2006.

FIELD OF THE INVENTION AND RELATED ART

[0002] This invention relates to an anti-vibration technique particularly effectively usable in exposure apparatuses, for example.

[0003] In semiconductor exposure apparatuses, generally, an X-Y stage is mounted on an anti-vibration system. Such an anti-vibration system includes a type in which vibration is attenuated by use of vibration absorbing means such as an air spring, a coiled spring or a vibration isolating rubber, and a type wherein vibration is actively cancelled by driving an actuator such as a voice coil motor. In recent years, in order to avoid deterioration of the positioning precision of the X-Y stage to meet further reduction in size of circuit patterns, active vibration cancellation has been used widely. The anti-vibration system based on active vibration cancellation uses acceleration sensors as sensor means for detecting the vibration.

[0004] As regards such acceleration sensors, it is possible that the offset voltage (offset component in an output signal, and hereinafter this will be referred to as "offset" or an "offset value") may change with time for a while after the anti-vibration system is assembled or installed in the factory. If such an offset voltage is present, an unwanted input as well will be applied to the actuator, and in some cases the offset voltage becomes large and the acceleration value grows beyond the reproducible range of an A/D converter. In consideration of this, conventionally, the offset is checked again before shipment. Alternatively, an average of time-series signals concerning acceleration signals may be detected and the difference between a latest acceleration signal and the average may be calculated to remove a DC component (Japanese Laid-Open Patent Application, Publication No. 6-137371). As a further alternative, whether a low-frequency driving signal for driving a pneumatic actuator has reached a predetermined level or more may be detected to thereby detect malfunction of an acceleration sensor (Japanese Laid-Open Patent Application, Publication No. 10-281215).

[0005] However, even if adjustment for checking the offset again is carried out before shipment, this could not meet the possibility that the offset voltage is variable after installment. Further, the offset removing method based on detection of an average of time-series signals of acceleration signals described above is not easy to perform because acceleration of a base table can be produced in various patterns due to the reaction force of the stage driving force. On the other hand, the acceleration sensor malfunction detecting method based on detecting whether the low-frequency driving signal reaches a predetermined level described above is suitable only to a system having two types of actuators, that is, an electromagnetic actuator and a pneumatic actuator.

SUMMARY OF THE INVENTION

[0006] It is accordingly an object of the present invention to provide an anti-vibration technique by which at least one of the inconveniences described above can be removed or reduced.

[0007] It is another object of the present invention to make it possible to appropriately renew offset data of an acceleration sensor that detects acceleration of a supporting member for supporting a driving mechanism.

[0008] In accordance with an aspect of the present invention, to achieve at least one of the objects described above, there is provided an anti-vibration system, comprising a supporting member for supporting a driving mechanism, an acceleration sensor for detecting acceleration of said supporting member, a driving unit for driving said supporting member, a storing unit for memorizing offset data to be used for offsetting an output of said acceleration sensor, an offset unit for offsetting an output of said acceleration sensor in accordance with the offset data memorized in said storing unit, a control unit for producing a driving signal in relation to said driving unit, on the basis of an output of said offset unit, and a renewing unit for renewing the offset data during a non-driving period of the driving mechanism, on the basis of an output of said acceleration sensor.

[0009] In accordance with another aspect of the present invention, there is provided an offset data renewing method to be used with an anti-vibration system that includes (i) a supporting member for supporting a driving mechanism, (ii) an acceleration sensor for detecting acceleration of the supporting member, (iii) a driving unit for driving the supporting member, (iv) a storing unit for memorizing offset data to be used for offsetting an output of the acceleration sensor, (v) an offset unit for offsetting an output of the acceleration sensor in accordance with the offset data memorized in the storing unit, and (vi) a control unit for producing a driving signal in relation to the driving unit, on the basis of an output of the offset unit, the improvements residing in the steps of: discriminating whether the offset data should be renewed or not, during the non-driving period of the driving mechanism, on the basis of an output of the acceleration sensor; and renewing the offset data during a non-driving period of the driving mechanism, on the basis of an affirmative discrimination result obtained in the discriminating step.

[0010] These and other objects, features and advantages of the present invention will become more apparent upon a consideration of the following description of the preferred embodiments of the present invention taken in conjunction with the accompanying drawings.

BRIEF DESCRIPTION OF THE DRAWINGS

[0011] **FIG. 1** is a block diagram for explaining the structure of an anti-vibration system according to an embodiment of the present invention.

[0012] **FIG. 2** is a block diagram for explaining offset adjusting means in the anti-vibration system of **FIG. 1**.

[0013] **FIGS. 3A and 3B** are waveform views, respectively, each illustrating a waveform of an acceleration value at the time of a floating start of a base table.

[0014] **FIG. 4** is a flow chart for explaining an offset value renewing procedure in the anti-vibration system of **FIG. 1**.

[0015] **FIG. 5** is a block diagram for explaining the structure of an anti-vibration system according to another embodiment of the present invention.

[0016] **FIG. 6** is a flow chart for explaining an offset value renewing procedure in the anti-vibration system of **FIG. 5**.

[0017] **FIG. 7** is a schematic view of an exposure apparatus to which the present invention can be applied.

[0018] **FIG. 8** is a flow chart for explaining the procedure of device manufacturing processes.

DESCRIPTION OF THE PREFERRED EMBODIMENTS

[0019] Preferred embodiments of the present invention will now be described with reference to the attached drawings.

[0020] **FIG. 1** illustrates the structure of an anti-vibration system according to an embodiment of the present invention. Denoted in the drawing at **1** is a base table on which an X-Y stage for positioning a substrate to be exposed, in a semiconductor exposure apparatus, is mounted. Denoted at **2** is a position sensor for measuring the position of the base table **1**, and denoted at **3** is a position controller for producing a driving signal on the basis of the measurement result of the position sensor **2**. Denoted at **4** is an acceleration sensor for measuring acceleration of the base table **1**, and denoted at **5** is a vibration controller for producing a driving signal on the basis of an acceleration value to be obtained by subtracting an offset value from the output of the acceleration sensor **4**. Denoted at **6** is an adder for adding outputs of the position controller **3** and the vibration controller **5**, and outputting a drive command on the basis of it. Denoted at **7** is an actuator for driving the base table **1** on the basis of the drive command from the adding circuit **6**.

[0021] The position controller **3** operates to calculate a position drive command necessary for the base table **1** to follow a target position, on the basis of the result of position measurement made by the position sensor **2**. The position controller then outputs a corresponding drive signal for the actuator **7**. Generally, in many cases, the position controller **3** is provided by a PI controller. The vibration controller **5** calculates a vibration drive command (a command for attenuating the vibration) effective to avoid vibration of the base table **1**, on the basis of an acceleration value that can be obtained by subtracting an offset value from the measured acceleration of the base table **1**, measured by the acceleration sensor **4**. The vibration controller then outputs a corresponding drive signal for the actuator **7**. Since the actuator **7** has an integration characteristic, as regards the vibration controller **5**, generally, and in may cases, one that can apply a proportional gain is used. The calculation of a drive command in the position controller **3** and the vibration controller **5** may be carried out by use of predetermined software, in a CPU **9** of **FIG. 2** to be described below.

[0022] **FIG. 2** illustrates the structure of offset adjusting means for canceling offset voltage of the acceleration sensor **4**. Denoted in **FIG. 2** at **9** is a CPU, and denoted at **10** is a D/A converter for converting an output of the CPU **9** into an analog value. Denoted at **11** is an adder for subtracting an output of the D/A converter **10** from an output of the acceleration sensor **4** and for outputting the result. Denoted at **12** is an A/D converter for converting an output of the adder **11** into a digital value and for applying the same to the CPU **9**. Denoted at **13** is a memory to which the CPU **9** is accessible. Denoted at **14** is an offset table prepared inside the memory **13**.

[0023] The offset table **14** stores therein an offset set value for canceling an offset attributable to a mounting error, or the like, of the acceleration sensor **4**. The CPU **9** reads out the offset set value from the offset table **14**, and produces and outputs an offset voltage through the D/A converter **10**. The adder **11** has a function for providing an output corresponding to a difference between this offset voltage and an acceleration measured value from the acceleration sensor **4**. This output of the adder is applied as an acceleration value to the CPU **9** through the A/D converter **12**.

[0024] With this circuitry, the offset of the acceleration sensor, which is attributable to the mount error, or the like, thereof, and which is variable with time, can be cancelled by the offset value in the offset table **14**. As regards the offset set value, the initial value thereof may be set at zero or any other appropriate value, and it may be determined by calculating an average value of measured values of the acceleration sensor **4** in a predetermined period.

[0025] **FIG. 3A** illustrates a waveform of an acceleration value as the base table **1** is just floated in the state in which the offset of the acceleration sensor **4** is cancelled correctly. However, in some acceleration sensors, it is possible that the offset voltage thereof varies for a while after being assembled into an anti-vibration system or after being installed in the factory. For example, if the offset voltage becomes large and the acceleration value grows to exceed the reproducible range ("−thm" to "thm") of the A/D converter **12**, as shown in **FIG. 3B**, accurate acceleration value is no longer obtainable.

[0026] **FIG. 4** illustrates the procedure of offset renewal, being effective to solve this problem. The offset renewing process is carried out as the base table **1** is floated, by means of vibration controller **5** or CPU **9**. As the process starts, first, at step **41**, the waveform of an acceleration signal outputted from the adder **11** is observed while the base table **11** is being floated, and a discrimination is made as to whether the time period in which the acceleration value is equal to the upper limit "thm" or the lower limit "−thm" of the reproducible range is longer than a predetermined time period or not. If the result of the discrimination shows that the time period is not longer than the predetermined time, since it means that offset cancellation has been made correctly, an offset renewing process is finished. If, on the other hand, the time period is discriminated as being longer than the predetermined time, since it means that offset cancellation has not been made correctly and the acceleration value is not correct, at step **42**, the base table is seated. Then, at step **43**, an average of acceleration values in a predetermined period is calculated.

[0027] Subsequently, at step **44**, on the basis of the thus calculated average value, a new offset set value is stored into the offset table **14**. Then, at step **45**, the base table floating is initiated again, and the sequence goes back to step **41**. The above-described procedure is repeated until an abnormality of the acceleration value is extinguished. However, if the

number of repetitions reaches a predetermined number, occurrence of hardware disorder may be displayed and notified to an operator, and the offset renewing process may be discontinued.

[0028] **FIG. 5** illustrates the structure of an anti-vibration system according to another embodiment of the present invention. Elements corresponding to those of **FIG. 1** are denoted by like numerals. In **FIG. 5**, denoted at **8** is an electromagnetic actuator for driving a base table **1**. The offset voltage of an acceleration sensor **4** can be cancelled by similar offset adjusting means such as shown in **FIG. 2**. In this embodiment, vibration of the base table **1** is suppressed by means of electromagnetic actuator **8**. More specifically, acceleration of the base table **1** is measured by the acceleration sensor **4**, and it is applied to a vibration controller **5**. The vibration controller **5** calculates a vibration drive command (a command for attenuating the vibration) effective to avoid vibration of the base table **1**, and it applies that vibration drive command to the electromagnetic actuator **8**.

[0029] Here, for applying damping to the control characteristic of the base table **1**, generally, and in many cases, an integrator or a pseudo integrator is used as the vibration controller **5**. The calculation of a drive command in the position controller **3** and the vibration controller **5** may be carried out by use of predetermined software, in the CPU **9** of **FIG. 2**, for example.

[0030] **FIG. 6** is a flow chart for explaining an offset renewing process according to this embodiment, which should be carried out each time the base table **1** is going to be floated (before the floating). This offset renewing process is carried out by means of a vibration controller **5** or CPU **9**. As the processor starts, first, at step **61**, a current output value of the acceleration sensor **4** is measured. Subsequently, at step **62**, the measured output value is compared with an offset set value in the offset table **14**, and a discrimination is made as to whether the difference between them is within a predetermined allowable range or not. If the discrimination result shows that the difference is within the allowable range, the sequence goes up to step **64** where the floating of the stage **1** is initiated and the offset renewing process is finished. If the discrimination result shows that the difference is beyond the allowable range, the sequence goes to step **65**, and an average of acceleration values in a predetermined period is calculated.

[0031] Subsequently, at step **66**, on the basis of the thus calculated average value, a new offset set value is stored into the offset table **14**. Then, the sequence goes back to step **61**. The above-described procedure is repeated until the acceleration value comes into the allowable range. However, if the number of repetitions reaches a predetermined number, occurrence of hardware disorder may be displayed and notified to an operator, and the offset renewing process may be discontinued.

[0032] In this embodiment, the offset renewing process is carried out before starting the floating of base table **1**. In place of this, as in the preceding embodiment, the process may be carried out in the state that the base table **1** is being floated at a steady position and the stage supported by the base table **1** is held stationary (i.e., not being driven).

[0033] The present invention is not limited to the embodiments described above, and it can be modified appropriately. For example, the criteria for discriminating whether the offset renewing process should be initiated or not is not limited to the one described above. It may be one that includes at least the former of the output of the acceleration sensor **4** and the offset value. Furthermore, while the offset measuring and renewing process is carried out while the base table is being seated, it may be carried out while the base table is being floated. Moreover, although in the embodiments described above, the number of actuators is not specified, it may be one or more. Generally, actuators are mounted on a supporting leg of the base table. If there are three supporting legs extending in a vertical direction, regarding the base-table position control system, a three-axis control system may be provided, including a Z-axis (vertical driving axis) translational control system, a rotational control system about the X-axis, and a rotational control system about the Y-axis. This is also the case with the vibration control system.

[0034] As regards the supporting legs for supporting the base table, they are not limited to vertical ones. Supporting legs adapted to drive the base table in a horizontal direction may be mounted. For example, by providing an air spring in a horizontal direction, swinging motion of the base table in the horizontal direction can be suppressed effectively. Alternatively, electromagnetic actuators for driving the base table in a horizontal direction may be mounted.

[0035] Furthermore, the present invention is effectively applicable even to a case wherein a plurality of stages are mounted on a base table or to a case wherein there is canceling means (called a "countermass") for canceling a drive reaction force of a stage on the base table by applying a drive in a direction opposite to the movement direction of the stage.

[0036] **FIG. 7** shows an exposure apparatus for device manufacture, into which an anti-vibration system, such as described above, is incorporated.

[0037] This exposure apparatus is to be used for the manufacture of microdevices having a fine pattern formed thereon, such as semiconductor devices (semiconductor integrated circuits, for example), micromachines, or thin-film magnetic heads, for example. In this exposure apparatus, exposure light (which may include visible light, ultraviolet light, EUV light, X-rays, an electron beam, and a charged particle beam, for example) as exposure energy supplied from a light source **161** illuminates a reticle R (original), and light from the reticle R is projected onto a semiconductor wafer W (substrate) through a projection system having a projection lens **162** (which may include a refractive lens, a reflective lens, a catadioptric lens system, and a charged particle lens, for example), whereby a desired pattern is produced on the substrate.

[0038] The exposure apparatus includes a base table **151** having a guide **152** and a linear motor stator **121** fixed thereto. The linear motor stator **121** has a multiple-phase electromagnetic coil, while a linear motor movable element **111** includes a permanent magnet group. The linear motor movable element **111** is connected as a movable portion **153** to a movable guide **154** (stage), and through the drive of the linear motor M1, the movable guide **154** can be moved in a direction of a normal to the sheet of the drawing. The movable portion **153** is supported by a static bearing **155**,

taking the upper surface of the base table **151** as a reference, and also by a static bearing **156**, taking the side surface of the guide **152** as a reference.

[**0039**] A movable stage **157**, which is a stage member disposed to straddle the movable guide **154**, is supported by a static bearing **158**. This movable stage **157** is driven by a similar linear motor M2, so that the movable stage **157** moves leftwardly and rightwardly as viewed in the drawings, while taking the movable guide **154** as a reference. The motion of the movable stage **157** is measured by means of an interferometer **160** and a mirror **159**, which is fixed to the movable stage **157**.

[**0040**] A wafer (substrate) W is held on a chuck which is mounted on the movable stage **157**, and a pattern of the reticle R is transferred in a reduced scale onto different regions on the wafer W by means of the light source **61** and the projection optical system **162**, in accordance with a step-and-repeat method or a step-and-scan method.

[**0041**] It should be noted that the substrate attracting device described hereinbefore can be similarly applied also to an exposure apparatus in which, without using a mask, a circuit pattern is directly drawn on a semiconductor wafer to expose a resist thereon.

[**0042**] Next, an embodiment of a device manufacturing method, which uses an exposure apparatus as described above, will be explained.

[**0043**] **FIG. 8** is a flow chart for explaining the overall procedure for semiconductor manufacture. Step **1** is a design process for designing a circuit of a semiconductor device. Step **2** is a process for making a mask on the basis of the circuit pattern design. Step **3** is a process for preparing a wafer by using a material such as silicon. Step **4** is a wafer process, which is called a pre-process, wherein, by using the thus prepared mask and wafer, a circuit is formed on the wafer in practice, in accordance with lithography. Step **5**, subsequent to this, is an assembling step, which is called a post-process, wherein the wafer having been processed at step **4** is formed into semiconductor chips. This step includes an assembling (dicing and bonding) process and a packaging (chip sealing) process. Step **6** is an inspection step wherein an operation check, a durability check, and so on, for the semiconductor devices produced by step **5**, are carried out. With these processes, semiconductor devices are produced, and they are shipped (step **7**).

[**0044**] More specifically, the wafer process at step **4** described above includes: (i) an oxidation process for oxidizing the surface of wafer; (ii) a CVD process for forming an insulating film on the wafer surface; (iii) an electrode forming process for forming electrodes upon the wafer by vapor deposition; (iv) an ion implanting process for implanting ions to the wafer; (v) a resist process for applying a resist (photosensitive material) to the wafer; (vi) an exposure process for printing, by exposure, the circuit pattern of the mask on the wafer through the exposure apparatus described above; (vii) a developing process for developing the exposed wafer; (viii) an etching process for removing portions other than the developed resist image; and (ix) a resist separation process for separating the resist material remaining on the wafer after being subjected to the etching process. By repeating these processes, circuit patterns are superposedly formed on the wafer.

[**0045**] While the invention has been described with reference to the structures disclosed herein, it is not confined to the details set forth and this application is intended to cover such modifications or changes as may come within the purposes of the improvements or the scope of the following claims.

[**0046**] This application claims priority from Japanese Patent Application No. 2003-386349 filed Nov. 17, 2003, which is hereby incorporated by reference.

1-15. (canceled)

16. A supporting apparatus comprising:

a supporting member configured to support a movable member;

an acceleration sensor configured to detect acceleration of said supporting member;

an actuator configured to drive said supporting member;

a memory configured to memorize offset data for said acceleration sensor;

an offset unit configured to offset an output of said acceleration sensor in accordance with the offset data in said memory;

a discrimination unit configured to discriminate whether the offset data should be renewed or not on the basis of an output of said acceleration sensor; and

a renewing unit configured to renew the offset data on the basis of the result of the discrimination made by said discrimination unit.

17. A supporting apparatus according to claim 16, further comprising a controller configured to produce a driving signal in relation to said actuator, on the basis of an output of said offset unit.

18. A supporting apparatus according to claim 16, wherein said renewing unit operates while said movable member is held stationary.

19. A supporting apparatus according to claim 16, wherein said discrimination unit makes the discrimination on the basis of data obtained by offsetting an output of said acceleration sensor with the offset data.

20. A supporting apparatus according to claim 16, wherein said discrimination unit makes the discrimination on the basis of the output of said acceleration sensor and the offset data.

21. A supporting apparatus according to claim 16, wherein said discrimination unit performs discrimination again to the offset data renewed by said renewing unit to verify the offset data.

22. A device manufacturing method, comprising the steps of:

exposing a substrate to a pattern by use of an exposure apparatus as recited in claim 16; and

developing the exposed substrate.

23. A supporting apparatus comprising:

a supporting member configured to support a movable member;

an acceleration sensor configured to detect acceleration of said supporting member;

an actuator configured to drive said supporting member;

a memory configured to memorize offset data for said acceleration sensor;

offset means for offsetting an output of said acceleration sensor in accordance with the offset data in said memory;

discrimination means for discriminating whether the offset data should be renewed or not on the basis of an output of said acceleration sensor; and

renewing means for renewing the offset data on the basis of the result of said discrimination means.

24. A method of controlling a supporting system wherein acceleration of a supporting member is detected by use of an acceleration sensor and wherein the supporting member is driven by use of an actuator, said method comprising the steps of:

storing offset data related to the acceleration sensor;

discriminating whether the acceleration offset data should be renewed or not, on the basis of an output of the acceleration sensor;

renewing the offset data on the basis of the result of the discrimination; and

controlling the drive of the supporting member while reflecting the renewed offset data.

25. A method of controlling a supporting system wherein acceleration of a supporting member is detected by use of an acceleration sensor and wherein the supporting member is driven by use of an actuator, said method comprising the steps of:

storing offset data related to the acceleration sensor;

discriminating whether the acceleration offset data should be renewed or not, on the basis of an output of the acceleration sensor;

repeating said discriminating step more than once; and

providing an alarm when the results of discriminations made in said discriminating step are all negative.

* * * * *