Sept. 13, 1938. L. C. BYARS 2,129,816

FOUNTAIN MOP CONTROL

Filed Dec. 18, 1936

Fig. 1.

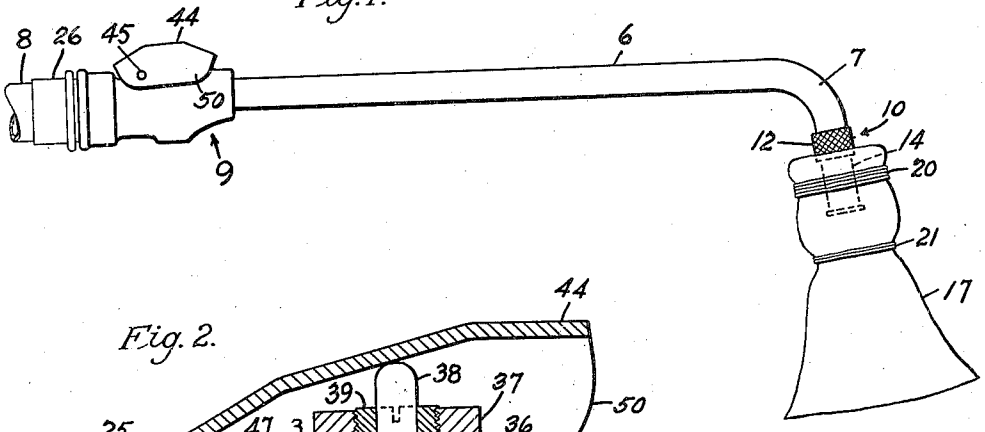

Fig. 2.

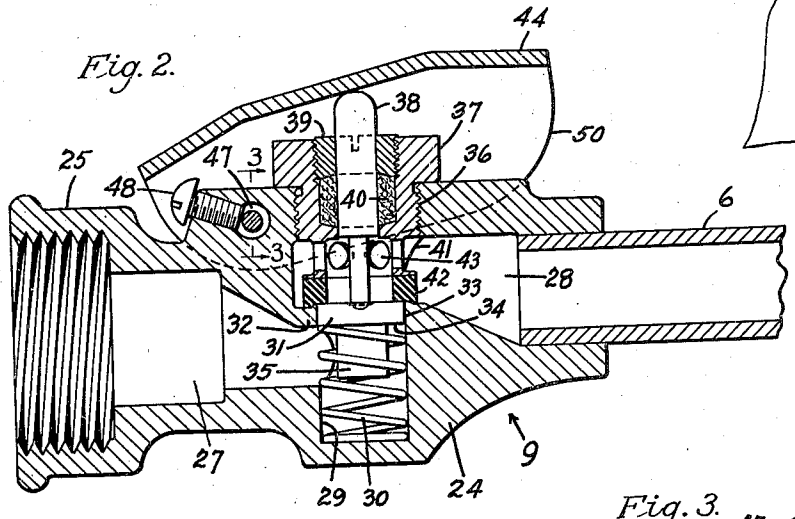

Fig. 3.

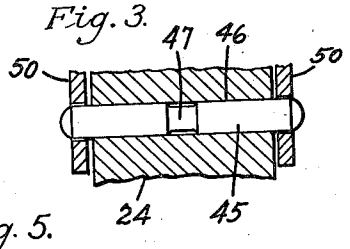

Fig. 4.

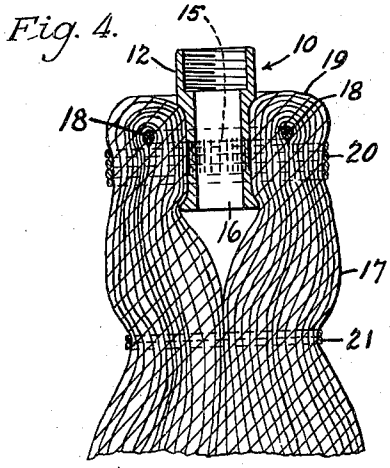

Fig. 5.

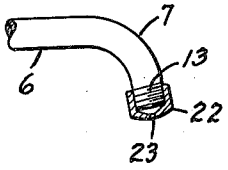

INVENTOR.

Logan C. Byars

BY Carlos G. Stratton

ATTORNEY.

Patented Sept. 13, 1938

2,129,816

UNITED STATES PATENT OFFICE

2,129,816

FOUNTAIN MOP CONTROL

Logan C. Byars, Los Angeles, Calif.

Application December 18, 1936, Serial No. 116,445

3 Claims. (Cl. 251—150)

My invention relates to a fountain mop control.

An object is to provide valve means for controlling the flow of water to a fountain mop, which valve means may be operated with the same hand that holds the mop and without the use of the fingers.

A further object is to provide such valve means that may be operated by the user in any turned position, which is valuable in case the hose turns in the user's hand.

The invention also comprises novel details of construction and novel combinations and arrangements of parts, which will more fully appear in the course of the following description.

In the drawing, like reference characters designate similar parts in the several views.

Figure 1 is an elevation of an embodiment of my invention.

Figure 2 is an enlarged, longitudinal section through the valve means comprised in the invention.

Figure 3 is a broken section, taken on the line 3—3 of Figure 2.

Figure 4 is a longitudinal section through a mop comprised in the invention.

Figure 5 is a broken elevation of a modification.

Referring more in detail to the drawing, the reference numeral 6 generally designates an elongated, hollow stem having an elbow 7. A flexible hose 8 supplies water to the stem through a valve 9. A nipple 10 is screwed on the end of the elbow. The nipple comprises a head 12, exteriorly knurled and interiorly threaded for application upon threaded end 13 of the elbow. The nipple has a spool-shaped body 14. The circumference of the body may also be roughened or knurled, as suggested at 15. The nipple has an open end 16 for the discharge of water.

An absorbent mop 17, such as ordinary string, is mounted on the spool-shaped body of the nipple. The string comprising the mop is preferably looped around strands 18 of string, as shown at 19. Wrapping 20 of string confines the body of the mop upon the spool-shaped body 14 of the nipple. Other wrapping 21 of string pinches together the body of the mop beyond the nipple discharge opening 16.

It is to be understood that a nozzle tip 22 having an orifice 23 may be substituted for the mop and nipple, when desired. The nozzle is internally threaded for application upon the threaded end 13 of the stem 6.

The valve employed for the fountain mop comprises a body 24 having an internally-threaded, integral coupling 25 for attachment to a coupling 26 at the end of the hose 8. The body 24 has an ingress passage 27 and an egress passage 28, the latter connecting with the stem 6.

The body 24 also comprises a recess 29 for a coiled spring 30 that tends to seat a valve 31. A partition 32, longitudinal of the body 24, separates the ingress passage from the egress passage. The partition has an opening 33 in which the valve 31 fits when the latter is in a closed position. The valve has a circumferential shoulder 34 against which the spring 30 bears, and a stem 35 on the valve extends into the coil of the spring 30.

The body 24 has a threaded opening 36 at one side, to receive a threaded plug 37. Another valve stem 38 is movably mounted in the plug. The stem 38 bears against the head of the valve 33, to unseat the valve when the stem 38 is depressed. A gland 39 and packing 40 maintain a fluid-tight arrangement of the stem 38 in the plug 37.

Mounted on an inner face of the plug 37 is a cage 41 upon which is arranged a preferably resilient seat 42 for the valve 31. The cage has a series of radial apertures 43 for the passage therethrough of fluid from the ingress passage to the egress passage.

A palm piece or grip 44, having opposed flanges 50, is pivoted on a pin 45, which in turn is mounted in an opening 46 in the body 24 of the valve. The pin 45 has a circumferential groove 47. A set screw 48 on the body 24 projects into the groove 47, to hold the pin against longitudinal movement in the opening 46. The palm piece 44 is pivoted on the ends of the pin 45, as best shown in Figure 3.

The piece 44 is bent to fit snugly in the palm of the user. The under side of the piece 44 bears against the pin 38.

In the use of my invention, the nozzle tip 22 may be utilized for washing mud from under automobile fenders, from wheels, and other places. The mop 17 is substituted for the tip when it is desired to wipe or mop certain parts. The elongated, bent stem 6 provides suitable length and angularity to facilitate the use of my device.

The valve is gripped by the user preferably with the piece 44 in the palm of the hand, although, it may also be manipulated by the fingers. Depression of the piece 44, and with it the stem 38, opens the valve 31, which permits the flow of liquid through my device. Releasing the piece 44 allows the spring 30 to seat the valve 31 and thereby shut off the flow of liquid.

To repair or replace the valve, valve seat or any or all of their associated parts, the set screw

is unscrewed sufficiently to release the pin 45. The pin is then pushed from the opening 46, releasing the grip 44, and the plug 37 is then unscrewed. (The head of the plug is preferably hexagonal.)

It will thus be seen that the hand which holds my device also controls the water supply, and this is true even though the valve turns in the user's hand.

While I have illustrated and described what I now regard as the preferred embodiment of my invention, the construction is, of course, subject to modifications without departing from the spirit of my invention. I, therefore, do not wish to restrict myself to the particular form of construction illustrated and described, but desire to avail myself of all modifications which may fall within the scope of the appended claims.

Having thus described my invention, what I claim and desire to secure by Letters Patent is:

1. A valve means comprising a body having a valve therein and a grip thereon to operate the valve, characterized by a pin mounted on the body with the ends of the pin projecting from the body at either side thereof, the projecting ends pivotally mounting the grip on the body, the body being arranged to prevent lateral movement of the pin relative to the body, the portion of the pin on the body having a groove, and a set screw inside the grip engaging the groove in the pin.

2. In a mounting for a valve-operating grip that has flanges at either side of a valve body, a pin mounted on the body with the ends of the pin projecting from the body at either side thereof, the projecting ends pivotally mounting the grip through the intermediary of the flanges, the pin maintaining an edge of the grip a distance from the valve body to provide a space therebetween, the portion of the pin on the body having a groove, a set screw underneath the grip and between the flanges and projecting into the body in engagement with the groove in the pin, and a head on the set screw arranged underneath the grip but opposite said space for the insertion through said space of a tool for turning the screw.

3. In a mounting for a valve-operating grip that has flanges at either side of a valve body, a pin mounted on the body with the ends of the pin projecting from the body at either side thereof, the valve body being arranged to prevent lateral movement of the pin relative to the body, the projecting ends pivotally mounting the grip through the intermediary of the flanges, the pin maintaining an edge of the grip a distance from the valve body to provide a space therebetween, the portion of the pin on the body having a groove, a set screw underneath the grip and between the flanges and projecting into the body in engagement with the groove in the pin, and a head on the set screw protecting the threads of the screw and disposed underneath the grip and between the flanges, and opposite said space for turning the screw by a tool inserted through said space.

LOGAN C. BYARS.