Innovation, Sciences et Développement économique Canada
Office de la Propriété Intellectuelle du Canada

Innovation, Science and Economic Development Canada
Canadian Intellectual Property Office

CA 2940145 C 2024/05/14

(11)(21) **2 940 145**

(12) **BREVET CANADIEN**
CANADIAN PATENT

(13) **C**

(22) Date de dépôt/Filing Date: 2016/08/25

(41) Mise à la disp. pub./Open to Public Insp.: 2017/02/28

(45) Date de délivrance/Issue Date: 2024/05/14

(30) Priorité/Priority: 2015/08/28 (CA2,901,863)

(51) Cl.Int./Int.Cl. *C10G 1/04* (2006.01), *C10C 3/08* (2006.01)

(72) Inventeurs/Inventors:
WU, JIANGYING, CA;
PAINE, RANDY, CA;
GARNER, WILLIAM NICHOLAS, CA

(73) Propriétaire/Owner:
CANADIAN NATURAL RESOURCES LIMITED, CA

(74) Agent: BURNET, DUCKWORTH & PALMER LLP

(54) Titre : PROCEDE ET APPAREIL DE DIVISION DE FLUX DE VAPEUR
(54) Title: PROCESS AND APPARATUS FOR SPLITTING VAPOUR STREAMS

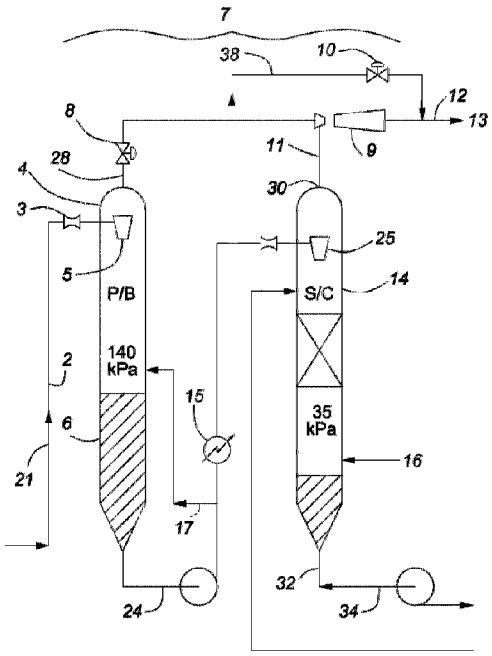

(57) Abrégé/Abstract:
A process and an apparatus for the treatment of paraffinic froth treatment tails comprising; providing a liquid tails stream; introducing the liquid tails stream into a pumpbox, wherein the pressure of the liquid tails stream is sufficiently higher than the pressure inside the pumpbox, so that when the liquid tails stream enters the pumpbox, a flash converts a portion of the liquid tails stream to a vapour, the remaining liquid tails accumulating at a bottom portion of the pumpbox prior to being removed and injected into a tailings solvent recovery unit; removing a portion of the vapour through a vapour management system located above the liquid line inside the pumpbox; creating solvent vapours in the tailing solvent recovery unit; and removing a portion of the solvent vapours created in the tailing solvent recovery unit through an outlet on the tailing solvent recovery unit, said outlet being in fluid connection with the pumpbox overflow vapour.

ABSTRACT

A process and an apparatus for the treatment of paraffinic froth treatment tails comprising: providing a liquid tails stream; introducing the liquid tails stream into a pumpbox, wherein the pressure of the liquid tails stream is sufficiently higher than the pressure inside the pumpbox, so that when the liquid tails stream enters the pumpbox, a flash converts a portion of the liquid tails stream to a vapour, the remaining liquid tails accumulating at a bottom portion of the pumpbox prior to being removed and injected into a tailings solvent recovery unit; removing a portion of the vapour through a vapour management system located above the liquid line inside the pumpbox; creating solvent vapours in the tailing solvent recovery unit; and removing a portion of the solvent vapours created in the tailing solvent recovery unit through an outlet on the tailing solvent recovery unit, said outlet being in fluid connection with the pumpbox overflow vapour.

PROCESS AND APPARATUS FOR SPLITTING VAPOUR STREAMS

FIELD OF INVENTION

This invention relates to the process and apparatus for the treatment of tailings streams that result from oil sands mining operations, in particular the solvent vapours generated during the treatment of tailings stream from solvent based froth treatment.

BACKGROUND OF INVENTION

The Athabasca region of Alberta, Canada has world scale bitumen deposits, some of which can be produced efficiently through surface mining. The standard flow sheet for removing the bitumen from the sands in these "mined oil" facilities includes a water washing/flotation process that results in a frothy emulsion of the bitumen containing typically 30 wt% water and 10 wt% mineral along with the bitumen and some gas.

There are a variety of methods used for cleaning this product. High temperature paraffinic froth treatment is recently the preferred process because it produces a very clean, partially upgraded (through asphaltene rejection) bitumen product. At the tail end of this process the water, mineral and asphaltene that has been removed from the bitumen must be cleaned of solvent to minimize impact to the environment and to recover the solvent for re-use which is important to the economy of the process. This is generally done through progressive flashing/stripping operations performed on the tailings stream.

Continuous flash vapourization is an established technology for the removal of low boiling substances from those with a higher boiling point. In the textbook "Mass Transfer Operations" by Treybal (McGraw-Hill 1980) the process is described on page 363 including a feed heater, a pressure reduction valve and a tangential/cyclonic entry into the drum.

Adding to this a loop to recirculate liquid back to the drum (allowing for more shear and time for the low boiling substance to evaporate) is taught in US patent 3,311,545 by Rasmussen.

Canadian Patent 1,027,501 teaches flashing for the removal of solvent from froth treatment tailings using a sub-atmospheric flash and focusing on naphtha as the solvent. Canadian Patents 2,272,035 and 2,272,045 teach flashing for the removal of solvent from froth treatment tailings — including paraffinic froth treatment tailings — both above and below atmospheric pressure and with steam injet into the vapour or liquid phase in the vessel. These patents also include an upstream pumpbox to feed the recovery tower.

Canadian Patent 2,750,845 teaches a two stage flashing of the tails stream from a paraffinic froth treatment plant including pressure moderation of the feed stream through a valve or regulator, hot water and/or steam addition.

Canadian patent 2,613,873 teaches the use of an inert gas to assist in the mass transfer of solvent from the tailings stream and identifies the value of a separation drum substantially free of internals.

Canadian patents 2,733,332 and 2,733,342 teach similar recovery techniques for the same stream. There is further discussion of the internals and pressures in these patents.

US 8,741,107 B2 teaches the use of droplet size control (in this case through nozzles) to improve the efficiency of the recovery of the solvent.

The focus of the above mentioned prior art is the activity in the flash vessel. The present invention is directed to the management of pressure in the vessels through the overhead system. Overhead systems using large vacuum pumps and inlet feed valves are sources of significant capital and maintenance costs and unreliability of the extant processes. According to a preferred embodiment of the present invention, there is conversion of some of the heat put into the waste stream to support the evaporation of the solvent into kinetic and then potential energy (pressure) reducing the energy consumption and capital cost. The present invention also allows, provided by the existence of the upstream pumpbox, the performance of part of the flash in a vessel substantially free from internals. The system to which the present invention is directed to is a progressive flashing stripping operation for the removal of a volatile solvent from a tails stream containing water, mineral and other, non-volatile hydrocarbons.

SUMMARY OF THE INVENTION

The present invention is directed to a process in which the vapour resulting from flashing and stripping of paraffinic froth treatment tails is split between two vessels positioned in series by allowing a flash to occur in an empty pumpbox followed by an internalled stripping column. According to a preferred embodiment of the present invention, using this method of vapour production also allows the use of the primary vapour to create lower pressure in the secondary stripping vessel and pressurize its overhead vapour through gas ejection.

According to a first aspect of the present invention, there is provided a process for the treatment of paraffinic froth treatment tails comprising:

- providing a liquid tails stream;

- introducing the liquid tails stream into a pumpbox, wherein the pressure of the liquid tails stream is sufficiently higher than the pressure inside the pumpbox, so that when the liquid tails stream enters the pumpbox, a flash converts a portion of the liquid tails stream to a vapour, the remaining liquid tails accumulating at a bottom portion of the pumpbox prior to being removed and injected into a tailings solvent recovery unit;
- removing a portion of the vapour through a vapour management system located above the liquid line inside the pumpbox;
- creating solvent vapours in the tailing solvent recovery unit; and
- removing a portion of the solvent vapours created in the tailing solvent recovery unit through an outlet on the tailing solvent recovery unit, said outlet being in fluid connection with the pumpbox overhead vapour.

Preferably, the process further comprises a step of heating the liquid tails stream prior to introduction into the pumpbox.

According to another preferred embodiment, the process further comprises a step of heating the underflow from the pumpbox prior to introduction into the tailings solvent recovery unit.

According to another preferred embodiment, the process further comprises a step of aspirating the solvent vapours from the tailings recovery unit by using the vapour stream from the pumpbox overhead. Preferably, the vapour management system combines the vapour from the pumpbox overhead and the vapour from the tailings recovery unit overhead into a single vapour stream. More preferably, the single vapour stream undergoes condensation and liquid/vapour separation to obtain a stream of recovered liquid solvent.

According to a first aspect of the present invention, there is provided an apparatus for the treatment of paraffinic froth treatment tails comprising:

- an inlet adapted with a liquid distributor to introduce liquid tails into a pumpbox to flash a portion of the liquid into a vapour;
- said pumpbox comprising a bottom portion comprising an outlet for the underflow and a top portion comprising an outlet for the overhead, said pumpbox underflow outlet being in liquid connection with a tailings solvent recovery unit,
- said tailings solvent recovery unit comprising a bottom section comprising an outlet for the underflow and a top section comprising an outlet for the overhead;
- a vapour management system located above the liquid line inside the pumpbox, said vapour management system comprising a first tubing fluidly connected to a top portion of the pumpbox, a second tubing fluidly connected to the top section of the tailings solvent

recovery unit, a venturi pump (ejector) connecting both the first and second tubing wherein, in operation, the flow of vapour travelling through the first tubing aspirates the vapour travelling through the second tubing.

According to a preferred embodiment, the apparatus further comprises a valve located parallel to the venturi pump and adapted to divert a portion of the flow of vapour travelling through the first tubing around the venturi pump.

According to a preferred embodiment, the apparatus further comprises a heating element adapted to heat the underflow from the pumpbox prior to introduction into the tailings solvent recovery unit.

According to another preferred embodiment, the apparatus further comprises a heating element adapted to heat the liquid tails stream prior to introduction into the pumpbox.

Preferably, the apparatus further comprises a recirculation of a portion of the underflow from the pumpbox back into the pumpbox.

According to a preferred embodiment, the apparatus further comprises a valve located along the first tubing in a position located upstream, of the venturi pump, said valve adapted to control the flow and superheat of vapour from the pumpbox into the venturi pump.

According to a first aspect of the present invention, there is provided a method to recover solvent from a tailings solvent recovery unit during the treatment of paraffinic froth treatment tails comprising:

- providing a liquid tails stream;
- introducing the liquid tails stream into a pumpbox, wherein the pressure of the liquid tails stream is sufficiently higher than the pressure inside the pumpbox, so that when the liquid tails stream enters the pumpbox, a flash converts a portion of the liquid tails stream to a vapour, the remaining liquid tails accumulating at a bottom portion of the pumpbox prior to being removed and introduced into a tailings solvent recovery unit;
- removing a portion of the vapour from the pumpbox through a vapour management system located above the liquid line inside the pumpbox;
- sending the underflow from said pumpbox to said tailings solvent recovery unit which comprises a bottom section comprising an outlet for the underflow and a top section comprising an outlet for the overhead, wherein said overhead of the tailing solvent recovery unit is in fluid connection with the vapour management system; and

- using a venturi pump driven by the flow of the pumpbox overhead vapours to extract vapours from the tailing solvent recovery unit overflow.

Preferably, the method further comprises adjusting the drive flow on the venturi pump to control the removal of the solvent vapours. Also preferably, the vapour management system further comprises a valve in parallel with the venturi pump to divert a portion of the pumpbox vapour flow around the venturi pump.

According to a first aspect of the present invention, there is provided a method to control of the pressure in a tailing solvent recovery unit, said method comprising:

- providing a liquid tails stream;
- introducing the liquid tails stream into a pumpbox, wherein the pressure of the liquid tails stream is sufficiently higher than the pressure inside the pumpbox, so that when the liquid tails stream enters the pumpbox, a flash converts a portion of the liquid tails stream to a vapour, the remaining liquid tails accumulating at a bottom portion of the pumpbox prior to being removed and injected into a tailings solvent recovery unit;
- removing a portion of the vapour from the pumpbox through a vapour management system located above the liquid line inside the pumpbox;
- sending the underflow from said pumpbox to said tailings solvent recovery unit which comprises a bottom section comprising an outlet for the underflow and a top section comprising an outlet for the overhead, wherein said overhead of the tailing solvent recovery unit is in fluid connection with the vapour management system;
- using a venturi pump driven by the flow of the pumpbox overflow vapours to extract vapours from the tailing solvent recovery unit overflow; and
- adjusting the flow through the venturi pump through the use of a valve to divert a portion of the pumpbox vapour flow around the venturi pump.

Preferably, the method further comprises adjusting the drive flow to the venturi pump to control the removal of the solvent vapours from the tailings solvent recovery unit. According to a preferred embodiment, a valve is positioned in parallel with the venturi pump. According to another preferred embodiment, a valve is positioned in series with the venturi pump. According to a preferred embodiment, the apparatus has a valve is positioned in parallel and a valve positioned in series with the venturi pump. This last embodiment allows for separate control of rate and superheat of the vapour driving the venturi pump.

The main pieces of process equipment are the pumpbox and the stripping column. In this design both pieces of equipment have a vapour release to an overhead treatment system. The partial flash that occurs in the pumpbox, does so at a pressure specified to both limit the flash to a vapour velocity that can fully segregate from the liquid droplets in the pumpbox headspace and to drive an ejector that is used to suck vapour from the stripping column and pressurize it into the downstream vapour condensation and separation processes.

According to a preferred embodiment of the present invention, there is no need for an overhead vacuum pump, or compressor. Nor is there a need for modulating control valves on the tails streams. This embodiment also has no internals below the feed distributor in the pump box. It includes no agitator in the first flashing stage (pumpbox). The elimination of the above mentioned elements present significant improvements in capital requirements and advantages in maintenance requirements which are part of the value proposition for the present invention.

According to another preferred embodiment of the present invention, one of the advantages of this process is that the most challenging part of the flash, from a reliability perspective, is put into a very simple vessel with very few internals and very simple controls. The importance of this lies in the violence of the initial flash since the pressure is dropped by roughly 6/7ths. The simplicity of the pumpbox also allows for better damage mitigation (such as internal hard surface) and simpler maintenance (no internals to avoid or remove). Another important reliability aspect of this preferred process is the alternative to using control valves on the tailings stream. A combination of fixed restrictions and elevation of the feed distributor provide the bulk of the pressure reduction and modulation is provided by the control of the overhead system backpressures and the stripping medium rate. This eliminates another cause of required maintenance.

BRIEF DESCRIPTION OF THE FIGURES

The actual construction, operation, and apparent advantages of the present invention will be better understood by referring to the drawings which are not necessarily to scale and in which:

Figure 1 is a schematic representation of the prior art process.

Figure 2 is a schematic representation of the process according to an embodiment of the present invention.

Figure 3 is a schematic representation of the process according to another embodiment of the present invention.

Figure 4 is a schematic representation of the process according to a third embodiment of the present invention.

Figure 5 is a schematic representation of the process according to a fourth embodiment of the present invention.

DETAILED DESCRIPTION OF THE PREFERRED EMBODIMENT

In the preferred embodiment, the unheated tails stream from the paraffinic froth treatment separator trains is introduced at pressure. This pressure is substantially reduced by head loss in the incoming pipe (2), and a restrictive spool (3) upstream of the pumpbox.

In referring to Figure 2, upon entering the pumpbox (4), the tails stream (21) is distributed with a cyclonic distributor (5) and simultaneously a portion of the liquid flashes to vapour. The remaining liquid droplets disengage from the vapour and fall to the liquid pool below (6). The liquid pool (6) creating a liquid line above which the distributor must always remain. The rate of flashing is controlled by the backpressure from the pumpbox vapour management system (7), consisting of a combination of full-stream control valve (8), ejector nozzle and ejector bypass control valve (10). The flow rate of this stream (28) is managed to control the amount of flash occurring in the pumpbox (4) to a level where the vapour liquid disengagement is approximately complete and the ejector (9) reduces the pressure of the vapour on the passive side (11) to approximately atmospheric, while discharging at some elevated pressure. This stream is subsequently treated to a combination of cooling/condensation and liquid vapour separation to recover the flashed solvent. The vapour management system is designed to accommodate the large volumes of vapour and later condensed liquid associated with accepting the flash vapour. Both vessels are eventually connected to a single vapour condensing and separation step designed for the entire load (rather than two intermediately sized systems, each having design and technical tolerances/margins. This has for effect to provide significant cost reductions.

A portion (17) of the underflow (24) can be recirculated back to the pumpbox (4). The underflow (24) from the pumpbox (4) is then charged into the tailings solvent recovery unit (TSRU) (14) through inlet (25).

The discharge of the pumpbox (4) is at a rate to stabilize the TSRU performance, to strip the remaining solvent at the pressure set by the passive side of the ejector. The tails stream (24) being charged to the TSRU (14) is heated (15) and stripping vapour (16) such as Vapour Recovery Unit (VRU)- produced-gas can be added to the column (14) as a stripping medium. The overhead vapours (1 1) from the TSRU (14) are pressurized in the ejector (9) and blended with the pumpbox overhead vapours (12) prior to cooling and condensation (13). The ejector (9) is adapted to allow the flow of the overhead vapours (28) from the

Date Reçue/Date Received 2023-07-19

pumpbox (4) to entrain the vapours (30) coming from the TSRU (14) and thus act as a venturi pump. This is desirable as it eliminates the need for conventional apparatus such as an overhead vacuum pump or compressor. In order to adjust the flow of the vapours being aspirated from the TSRU (14), a valve (10) located in parallel with the venturi pump allows to adjust the flow vapours coming from the pumpbox (4) by diverting through valve (10) actuation, a portion of the vapour flow (38) to bypass the venturi pump. Control of the head pressure in the pumpbox is tuned and adjusted to maintain a relatively consistent vapour loading from the thermally neutral flash. The tailings (34) are discharged from the TSRU (14) through an outlet (32) located near the bottom of the column.

In the prior art process as seen in Figure 1, the tailings are introduced into a steam stripping vessel where the pressure is maintained at near atmospheric pressure.

According to another preferred embodiment of the present invention, Figure 3, the full stream control valve (8) is positioned after the vapour flow bypass (38) but prior to the venturi pump.

According to another preferred embodiment of the present invention, and a variation of the embodiment of Figure 3, is the process depicted by Figure 4, which process does not provide for a heating element prior to the tailings from the underflow (24) reaching the TSRU (14). Rather than this, the entire tailings stream is heated prior to introduction into the pump box generating a combination of more flash vapour and/or higher pressure flash vapour and leaving the tails at the preferred temperature for introduction into the TSRU.

According to another preferred embodiment of the present invention as depicted in Figure 5, there is provided a flow chart of the process according where the venturi pump is located within the TSRU (14).

According to another embodiment of the present invention, there is no modulating pressure control on the tails stream being charged to the pumpbox or the TSRU. There is no valve on the slurry feed line to either vessel. The vessel pressure is "set" by the overhead system, the flow rate is "set" by the pump working against a restriction and the flash occurs in such a way as these balance (ideally the flash occurs in the restriction). This eliminates a major reliability issue — the valve — which can plug and wear. For the more traditional naphthenic systems, the restriction was, in some cases, the pipe rise going into the vessel, but that is not sufficient for a typical paraffinic pressure drop.

According to another embodiment of the present invention, the tails stream (21) is heated before entering the pumpbox (4) instead of being heated after exiting the pumpbox. This provides a tail stream having a higher temperature, therefore upon entering the pumpbox more vapour and/or higher pressure vapour will be created upon flashing.

Date Reçue/Date Received 2022-12-15

According to another embodiment of the present invention, the pumpbox vapour system is pressure controlled to allow the flashing of an amount of vapour consistent with proper droplet disengagement within the pumpbox head diameter. Preferably also, the feed distributors into the pumpbox manage the liquid droplet size to minimize foaming and to stabilize the flash behavior. Preferably, the liquid flow is oriented primarily downward. Also preferably, the feed system is placed in the vapour head of the pumpbox (volume already present to prevent liquid relief).

According to another embodiment of the present invention, the stripping vapour in the TSRU vessel is VRU-produced-gas.

The embodiments described herein are to be understood to be exemplary and numerous modification and variations of the present invention are possible in light of the above teachings. It is therefore to be understood that within the scope of the claims appended hereto, the invention may be practiced otherwise than as specifically disclosed herein.

CLAIMS

1. A process for the treatment of paraffinic froth treatment tails comprising:

- providing a liquid tails stream;

- introducing the liquid tails stream into a pumpbox, wherein a pressure of the liquid tails stream is sufficiently higher than a pressure inside the pumpbox, so that when the liquid tails stream enters the pumpbox,

- the liquid tails stream flashes and converts a portion thereof to a vapour, with remaining liquid tails accumulating at a bottom portion of the pumpbox prior to being removed and introduced into a tailings solvent recovery unit;

- removing a portion of the vapour through a vapour management system located above a liquid line inside the pumpbox;

- creating solvent vapours in the tailing solvent recovery unit; and

- removing a portion of the solvent vapours created in the tailing solvent recovery unit through an outlet on the tailing solvent recovery unit, said outlet being in fluid connection with a pumpbox overhead vapour.

2. The process according to claim 1 further comprising a step of heating the liquid tails stream prior to introduction into the pumpbox.

3. The process according to claim 1, further comprising a step of heating an underflow from the pumpbox prior to injection into the tailings solvent recovery unit.

4. The process according to any one of claims 1 to 3 further comprising a step of aspirating the solvent vapours from the tailings recovery unit by using the vapour stream from a pumpbox overflow.

5. The process according to claim 4 wherein the vapour management system combines the vapour from the pumpbox overflow and the solvent vapours from the tailings recovery unit overflow into a single vapour stream.

6. The process according to claim 5 wherein said single vapour stream undergoes condensation and liquid vapour separation to obtain a stream of recovered solvent and a stream of waste water.

Date Reçue/Date Received 2023-07-19

7. An apparatus for the treatment of paraffinic froth treatment tails comprising:

- an inlet adapted with a distributor to introduce liquid tails into a pumpbox to flash a portion of the liquid into a vapour;

- said pumpbox comprising a bottom portion comprising an outlet for an underflow and a top portion comprising an outlet for an overhead, said pumpbox underflow outlet being in fluid connection with a tailings solvent recovery unit,

- said tailings solvent recovery unit comprising a bottom section comprising an outlet for the tailings solvent recovery unit underflow and a top section comprising an outlet for the tailings solvent recovery unit overhead;

- a vapour management system located above a liquid line inside the pumpbox, said vapour management system comprising a first tubing fluidly connected to a top portion of the pumpbox, a second tubing fluidly connected to a top section of the tailings solvent recovery unit, a venturi pump connecting both the first and second tubing wherein, in operation, a flow of vapour travelling through the first tubing aspirates the vapour travelling through the second tubing.

8. The apparatus according to claim 7 further comprising a valve located parallel to the venturi pump and adapted to divert the flow of vapour travelling through the first tubing around the venturi pump.

9. The apparatus according to claim 7 or 8 further comprising a heating element adapted to heat the underflow from the pumpbox prior to introduction into the tailings solvent recovery unit.

10. The apparatus according to claim 7 or 8 further comprising a heating element adapted to heat the liquid tails stream prior to introduction into the pumpbox.

11. The apparatus according to any one of claims 7 to 10 further comprising a recirculation of the underflow from the pumpbox back into the pumpbox.

12. The apparatus according to any one of claims 7 to 11 further comprising a valve located along the first tubing in a position located upstream, of the venturi pump, said valve adapted to control the flow and a superheat of vapour from the pumpbox into the venturi pump.

13. A method to recover solvent from a tailings solvent recovery unit during the treatment of paraffinic froth treatment tails comprising:

Date Reçue/Date Received 2023-07-19

- providing a liquid tails stream;

- introducing the liquid tails stream into a pumpbox, wherein a pressure of the liquid tails stream is sufficiently higher than a pressure inside the pumpbox, so that when the liquid tails stream enters the pumpbox;

- converting a portion of the liquid tails stream to a vapour, with remaining liquid tails accumulating at a bottom portion of the pumpbox prior to being removed and introduced into a tailings solvent recovery unit;

- removing a portion of the vapour from the pumpbox through a vapour management system located above a liquid line inside the pumpbox;

- sending an underflow from said pumpbox to said tailings solvent recovery unit which comprises a bottom section comprising an outlet for the underflow and a top section comprising an outlet for an overhead, wherein an overflow of the tailing solvent recovery unit is in fluid connection with the vapour management system; and

- using a venturi pump driven by a flow of the pumpbox overflow vapours to extract vapours from the tailing solvent recovery unit overflow.

14. The method according to claim 13, wherein the vapour management system further comprises a valve in parallel with the venturi pump to divert a portion of the pumpbox vapour flow around the venturi pump.

15. A method to control the pressure in a tailing solvent recovery unit, said method comprising:

- providing a liquid tails stream;

- introducing the liquid tails stream into a pumpbox, wherein a pressure of the liquid tails stream is sufficiently higher than a pressure inside the pumpbox, so that when the liquid tails stream enters the pumpbox,

- converting a portion of the liquid tails stream to a vapour, with remaining liquid tails accumulating at a bottom portion of the pumpbox prior to being removed and introduced into a tailings solvent recovery unit;

- removing a portion of the vapour from the pumpbox through a vapour management system located above a liquid line inside the pumpbox;

Date Reçue/Date Received 2023-07-19

- sending an underflow from said pumpbox to said tailings solvent recovery unit which comprises a bottom section comprising an outlet for an underflow and a top section comprising an outlet for an overhead, wherein said overhead of the tailing solvent recovery unit is in fluid connection with the vapour management system;

- using a venturi pump driven by a flow of the pumpbox overhead vapours to extract vapours from the tailing solvent recovery unit overhead; and

- adjusting the flow through the venturi pump through the use of a valve through the use of the venturi pump to divert a portion of the pumpbox vapour flow around the venturi pump.

16. The method according to claim 15, wherein the valve is positioned in parallel with the venturi pump.

17. The method according to claim 15, wherein the valve is positioned in series with the venturi pump.

Date Reçue/Date Received 2023-07-19

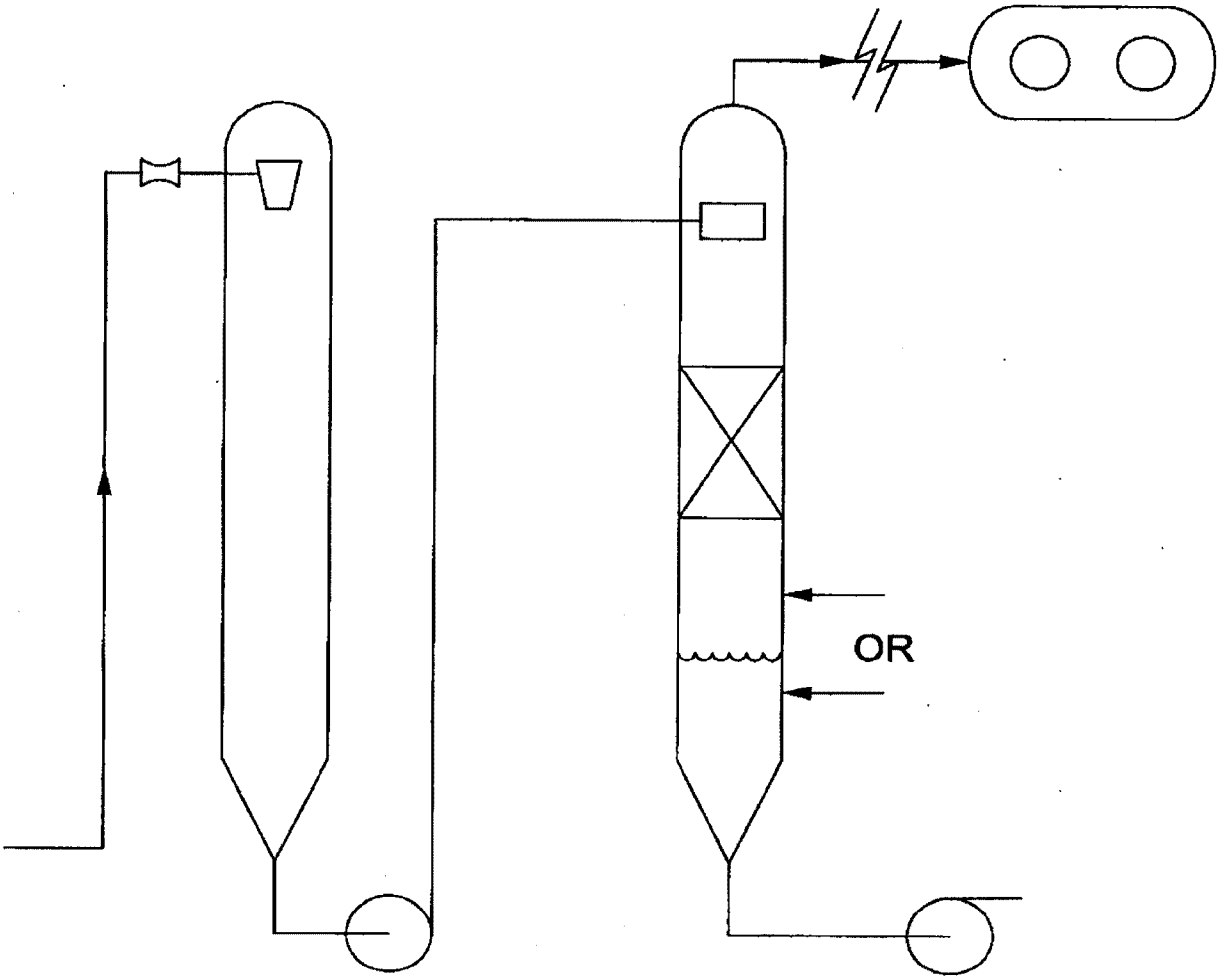

(PRIOR ART)

FIG. 1

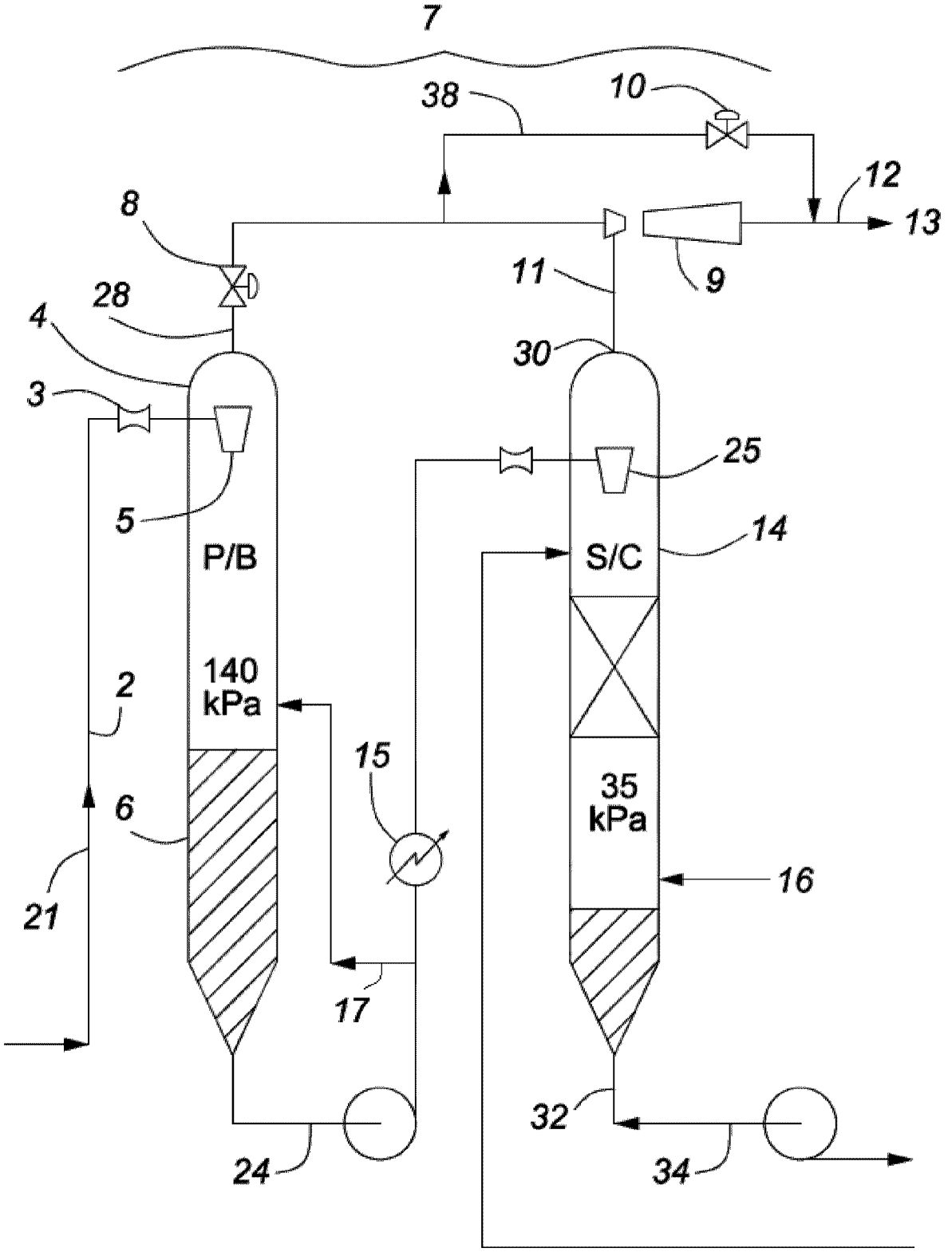

FIG. 2

Date Reçue/Date Received 2022-12-15

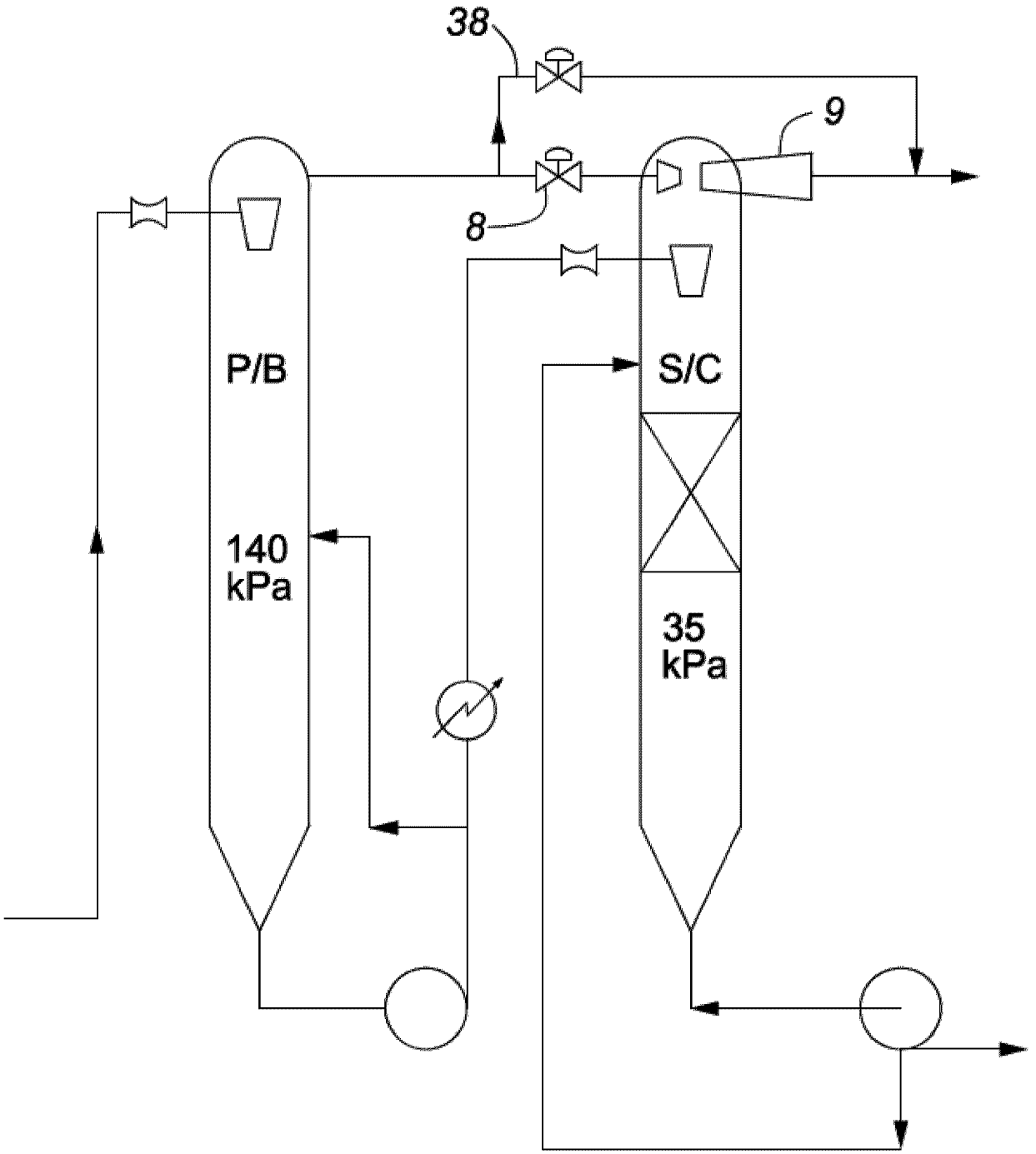

FIG. 3

Date Reçue/Date Received 2022-12-15

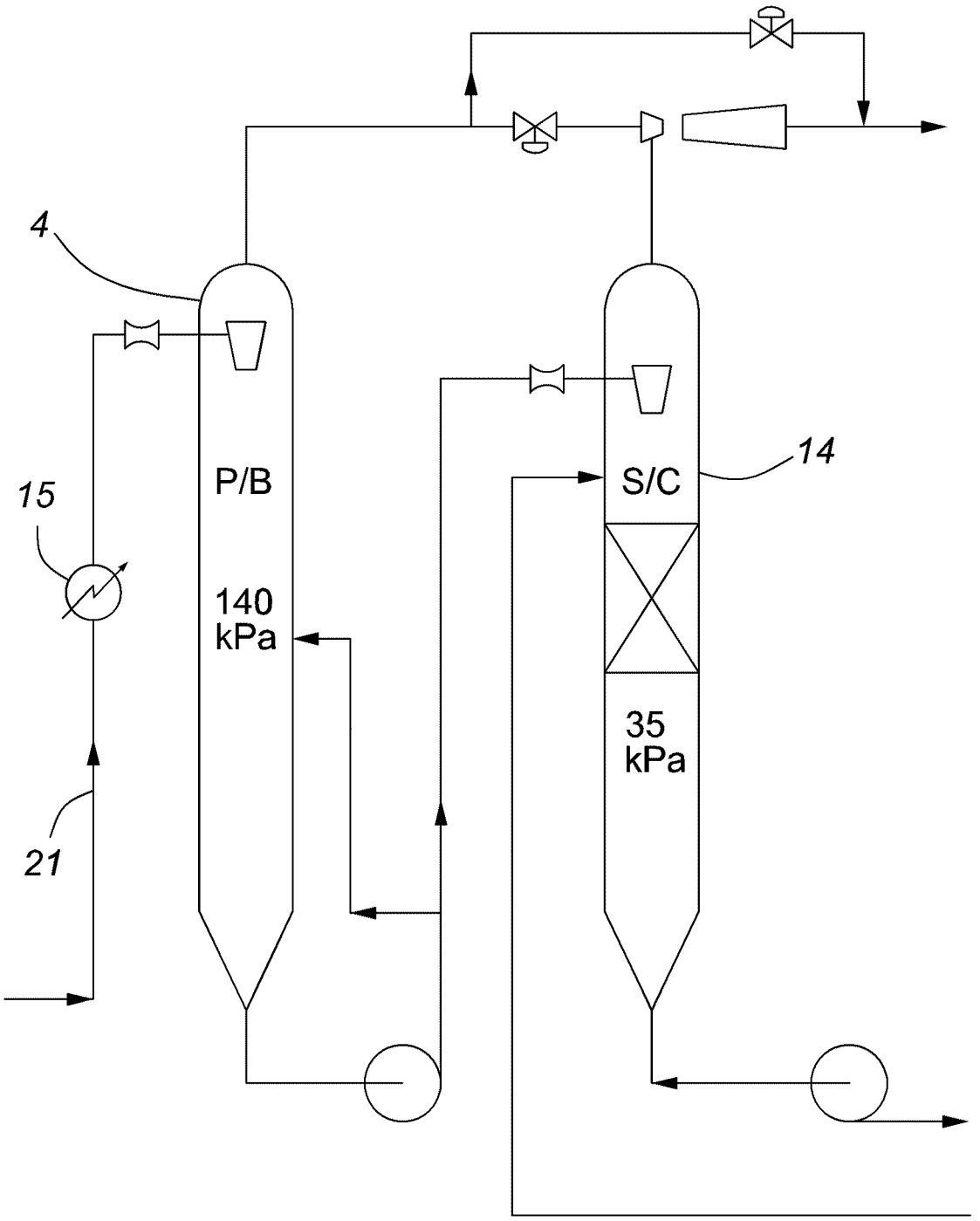

FIG. 4

Date Reçue/Date Received 2022-12-15

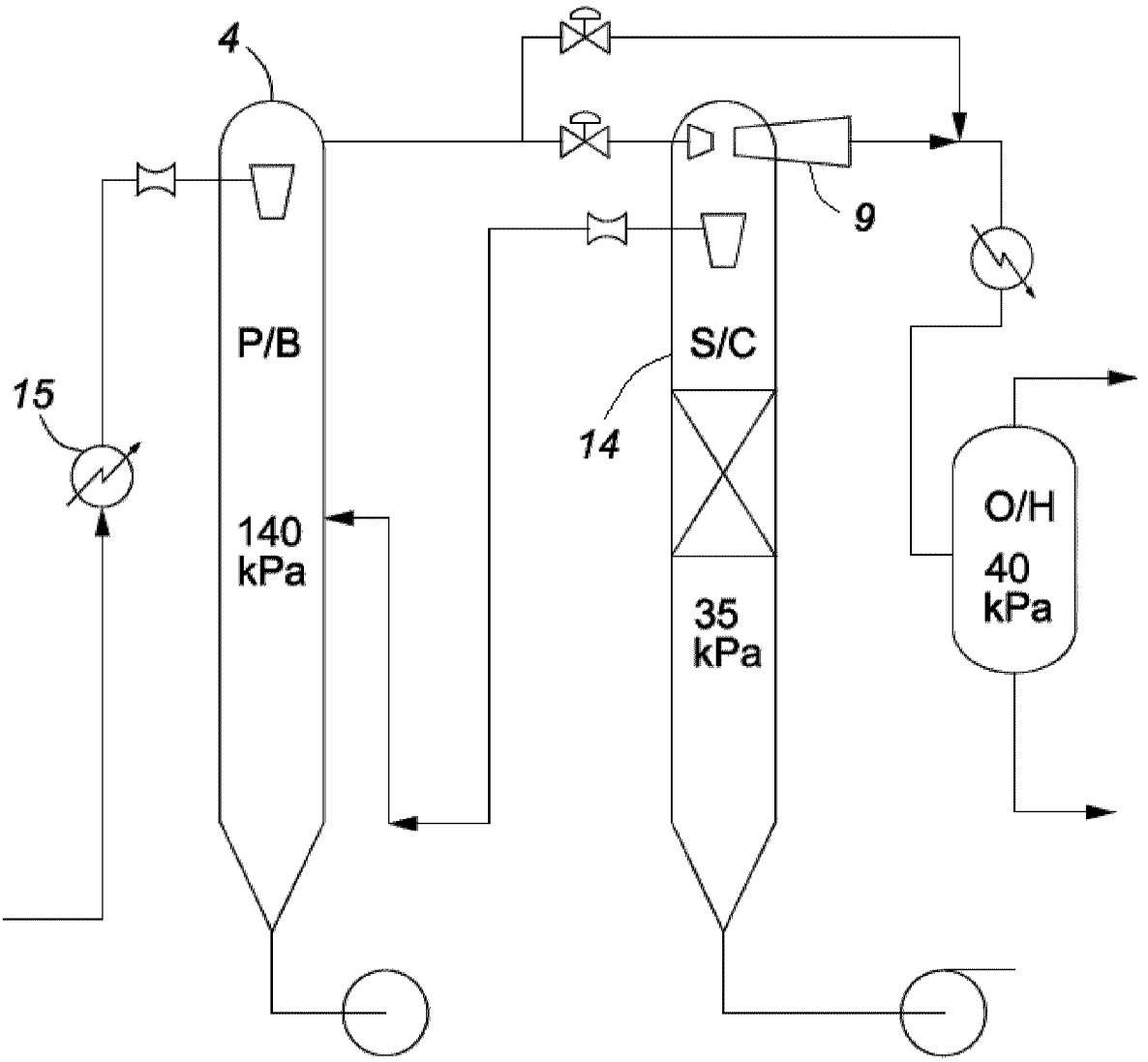

FIG. 5

Date Reçue/Date Received 2022-12-15

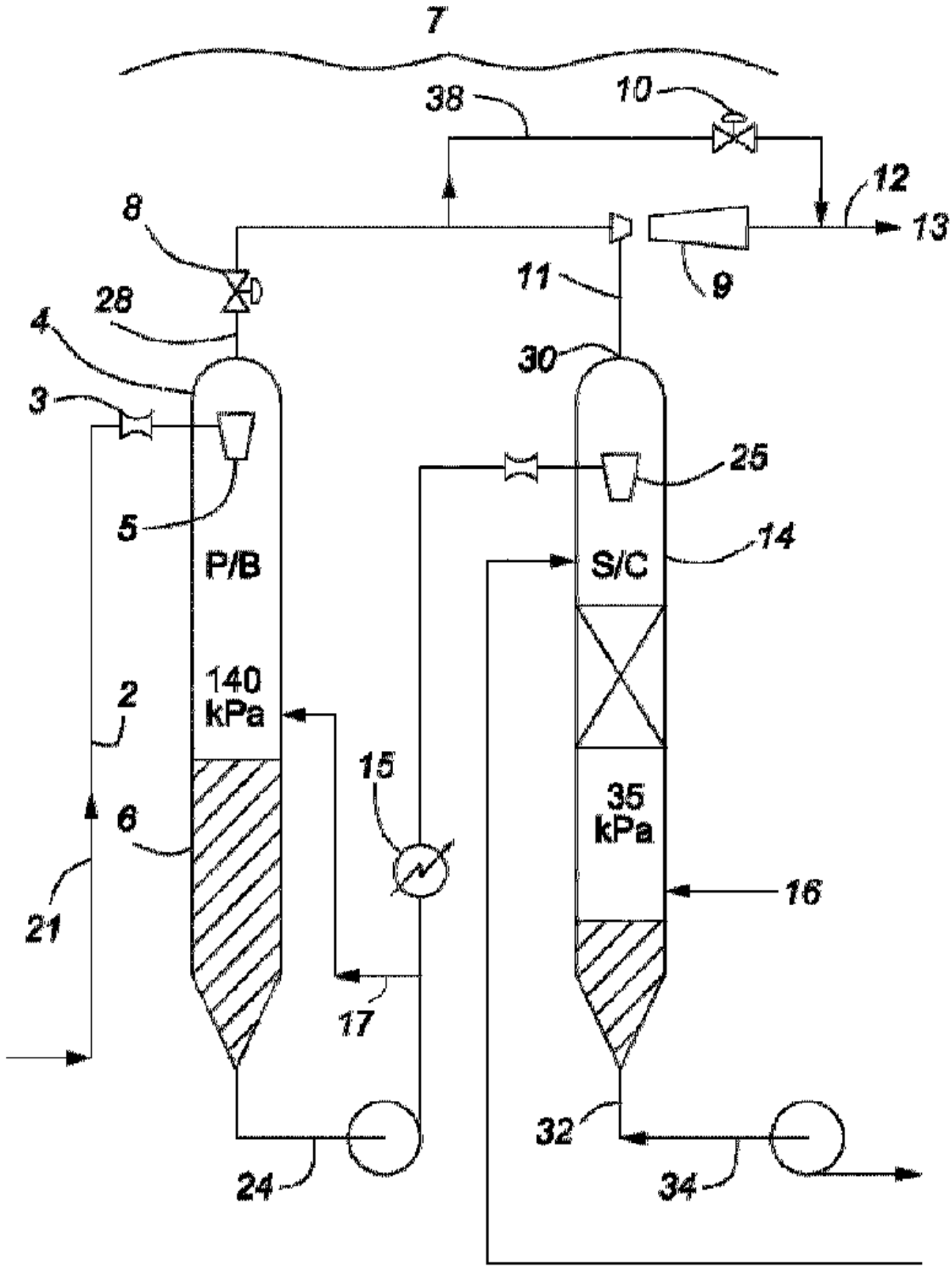
7
38
10
12
13
8
9
11
28
4
30
3
25
5
14
P/B
S/C
140
kPa
2
15
35
kPa
6
16
21
17
32
24
34