No. 783,963. PATENTED FEB. 28, 1905.

E. B. KENNEDY.

PUTTYING TOOL.

APPLICATION FILED NOV. 19, 1904.

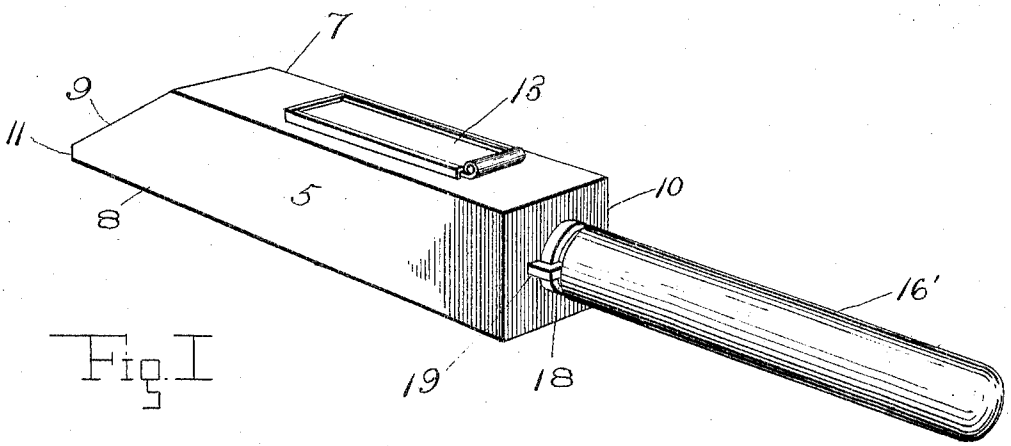

Fig. I

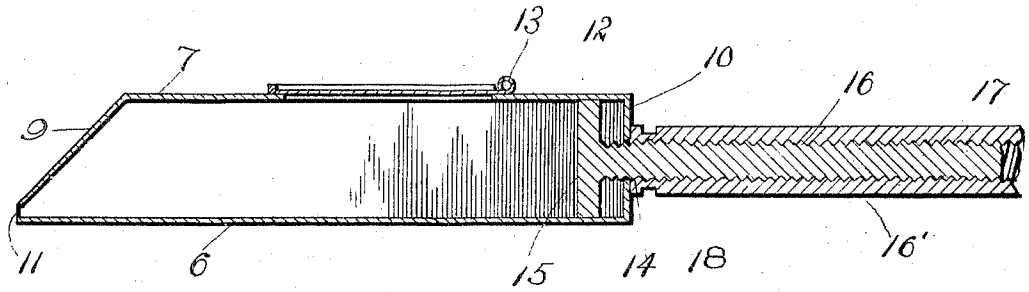

Fig. 2

Witnesses
J. C. Simpson.
E. M. Colford

Inventor
E. B. Kennedy
By
Chandler & Chandler
Attorneys

PHOTO-LITHOGRAPHED BY SACKETT & WILHELMS LITHO. & PTG. CO. NEW YORK.

No. 783,963. Patented February 28, 1905.

UNITED STATES PATENT OFFICE.

ELMER B. KENNEDY, OF NEWTON, KANSAS.

PUTTYING-TOOL.

SPECIFICATION forming part of Letters Patent No. 783,963, dated February 28, 1905.

Application filed November 19, 1904. Serial No. 233,548.

To all whom it may concern:

Be it known that I, ELMER B. KENNEDY, a citizen of the United States, residing at Newton, in the county of Harvey, State of Kansas, have invented certain new and useful Improvements in Puttying-Tools; and I do hereby declare the following to be a full, clear, and exact description of the invention, such as will enable others skilled in the art to which it appertains to make and use the same.

This invention relates to tools, and more particularly to putty-knives, and has for its object to provide a device of this nature which will be equipped with means for feeding putty to the knife and which will be simple of construction and cheap of manufacture.

Other objects and advantages will be apparent from the following description, and it will be understood that modifications of the specific construction shown may be made and any suitable materials may be used without departing from the spirit of the invention.

In the drawings forming a portion of this specification, and in which like numerals of reference indicate similar parts in both views, Figure 1 is a perspective view. Fig. 2 is a longitudinal section.

Referring now to the drawings, the present invention comprises a body portion 5, including a bottom 6, top 7, sides 8, and forward and rearward ends 9 and 10, respectively. The forward end 9 slants rearwardly from the bottom 6, and at the meeting edges of the forward end and bottom there is an opening 11, which extends transversely of the body portion.

In the top 8 there is an opening 12, provided with a sliding closure 13.

Formed in the rearward end 10 centrally thereof there is an opening 14, and slidably disposed within the body portion there is a follower 15, having a threaded stem 16, which is slidably engaged in the opening 14 and projects outwardly of the body portion. A handle 16′ is provided having an interiorly-threaded socket 17 therein extending longitudinally thereof, and in this socket the stem 16 is engaged. Adjacent to its inner end the handle 16′ is provided with a circumscribing peripheral groove 18, and secured to the end 10, one at each side of the handle 16′, are pins 19, having their outer end portions bent at right angles and lying in the groove 18, so as to prevent separation of the handle from the body portion, while permitting of free rotation thereof.

In use the slide 13 is withdrawn and the body portion 5 is filled with putty. The handle 16′ is now revolved to move the follower 16 toward the forward end 9 of the body portion, as will be readily understood, this movement of the follower forcing the putty out through the opening 11. The bottom 6 acts as an ordinary putty-knife, and by reason of the fact that the forward end 9 slants rearwardly from the bottom the tool may be used for puttying corners or similar places.

What is claimed is—

1. A device of the class described comprising a hollow body portion, having an opening at the forward end of its bottom, and having a passage formed through its rearward end, a follower slidably disposed within the body portion for movement longitudinally thereof, a threaded stem carried by the follower and extending outwardly through the passage in the rearward end of the body portion, and a handle having a threaded socket in which the stem is engaged, said handle being revoluble to move the follower within the body portion.

2. A device of the class described comprising a hollow body portion having a discharge-opening at its forward end, a follower slidably disposed in the body portion for movement longitudinally therewithin, a threaded stem carried by the follower and projecting outwardly of the casing, a handle having a threaded socket in which the stem is engaged, said handle being arranged for rotation to move the follower within the body portion, said handle having a circumscribing peripheral groove adjacent to its inner end, and angular pins carried by the body portion and disposed with their angular portions engaged in the peripheral groove.

In testimony whereof I affix my signature in presence of two witnesses.

ELMER B. KENNEDY.

Witnesses:

CLARENCE SPOONER,

F. C. CHILDS.