Feb. 22, 1944. A. W. BRAUN 2,342,327

TIMING DEVICE

Filed June 30, 1941 4 Sheets-Sheet 1

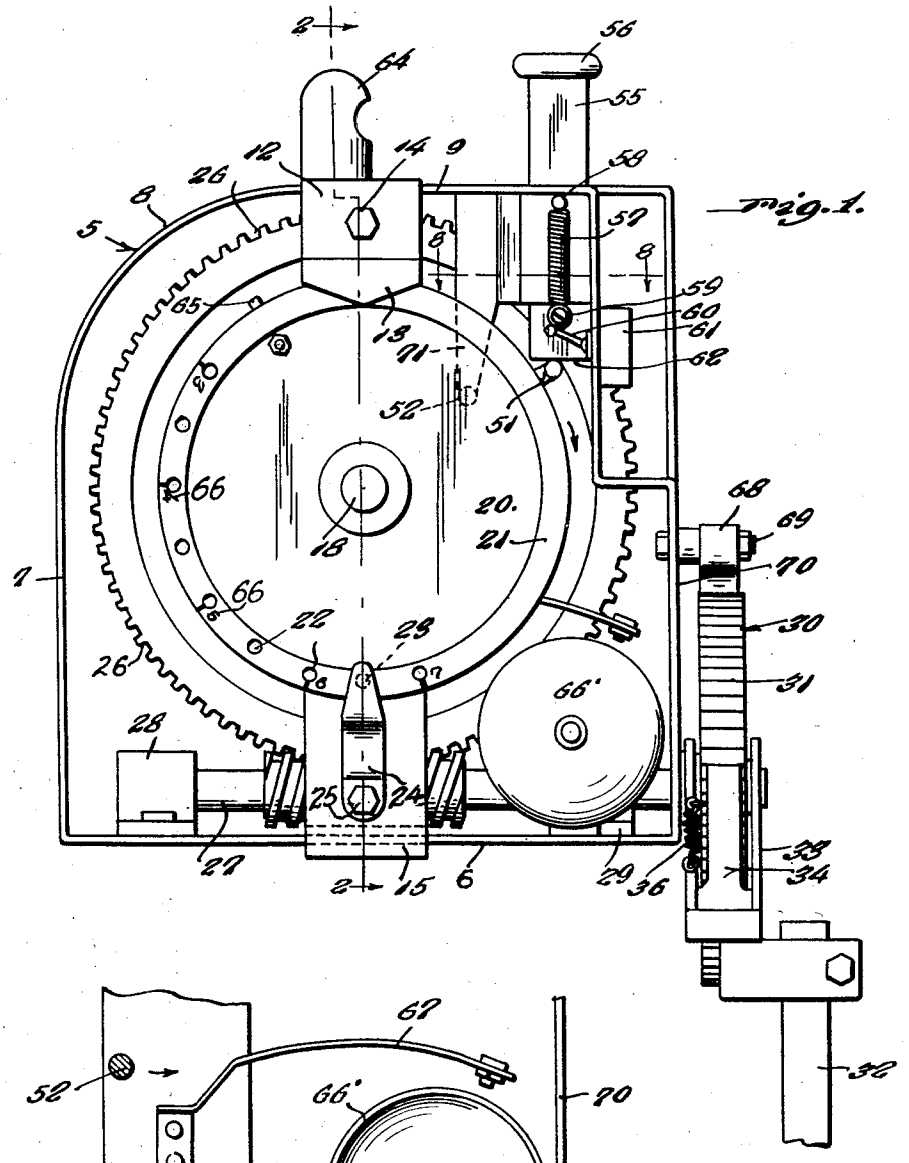

Fig. 1.

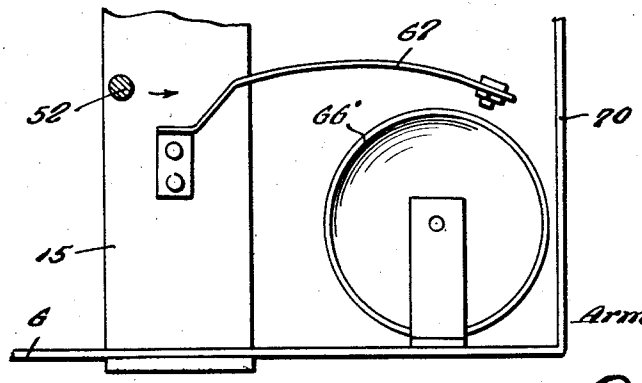

Fig. 10.

Inventor

Armond W. Braun

By Clarence A. O'Brien

Attorney

Feb. 22, 1944. A. W. BRAUN 2,342,327

TIMING DEVICE

Filed June 30, 1941 4 Sheets-Sheet 2

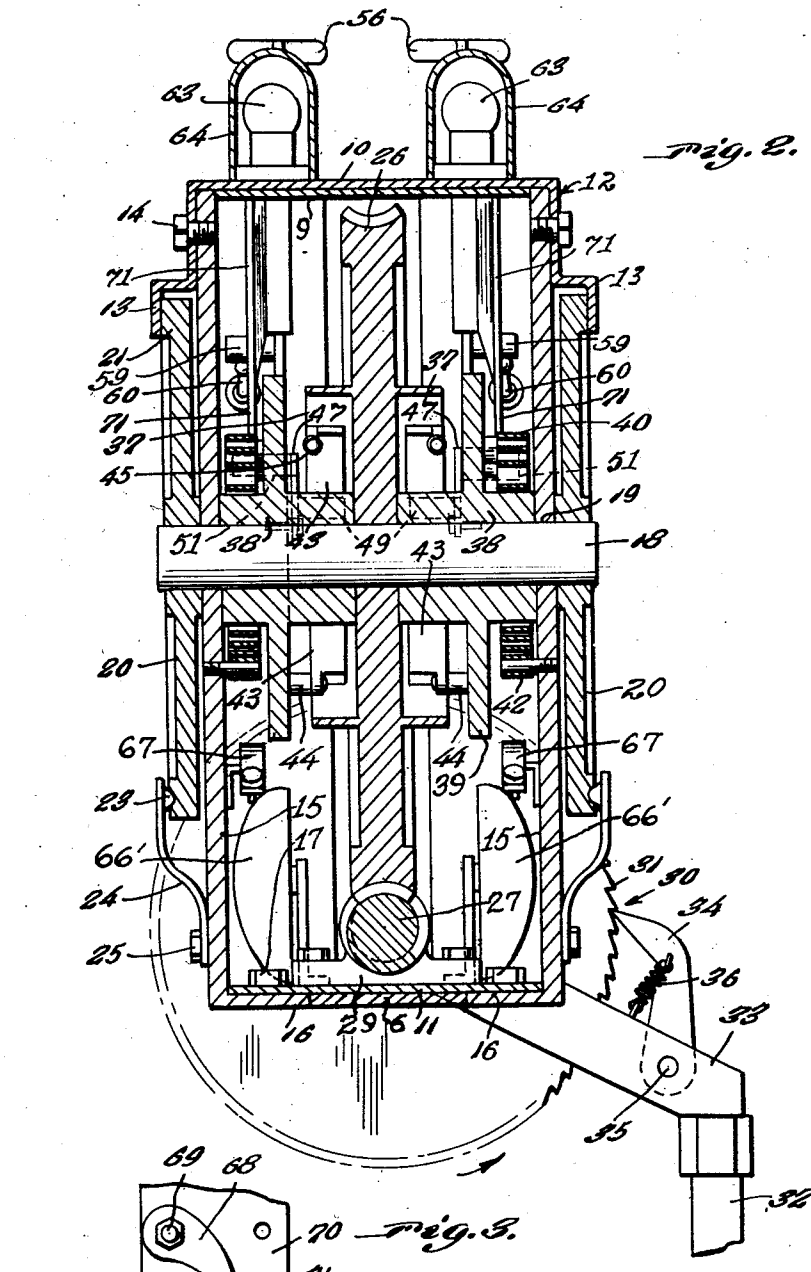

Fig. 2.

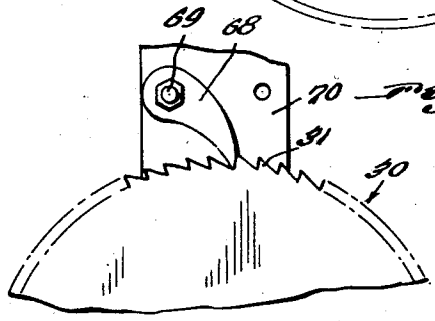

Fig. 3.

Inventor

Armond W. Braun

By Clarence A. O'Brien

Attorney

Feb. 22, 1944. A. W. BRAUN 2,342,327

TIMING DEVICE

Filed June 30, 1941 4 Sheets-Sheet 3

Fig. 4.

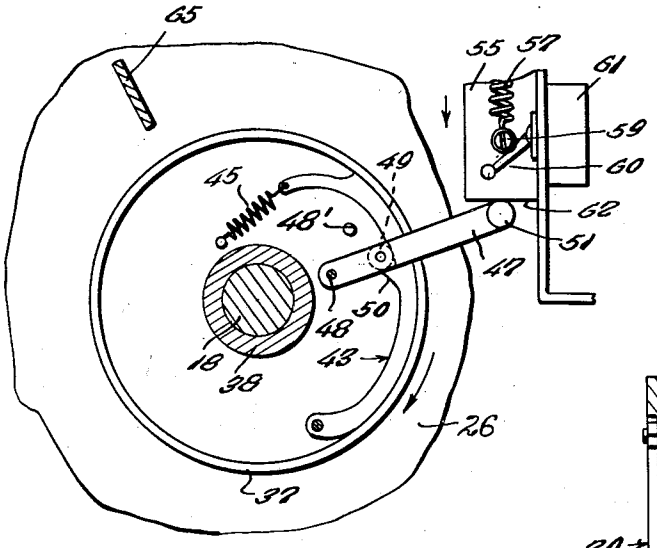

Fig. 4a

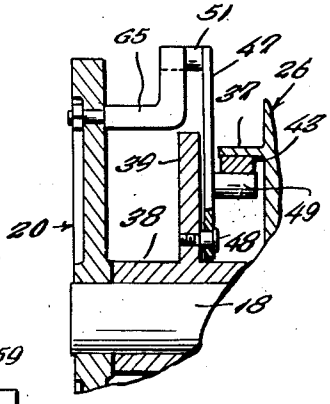

Fig. 6.

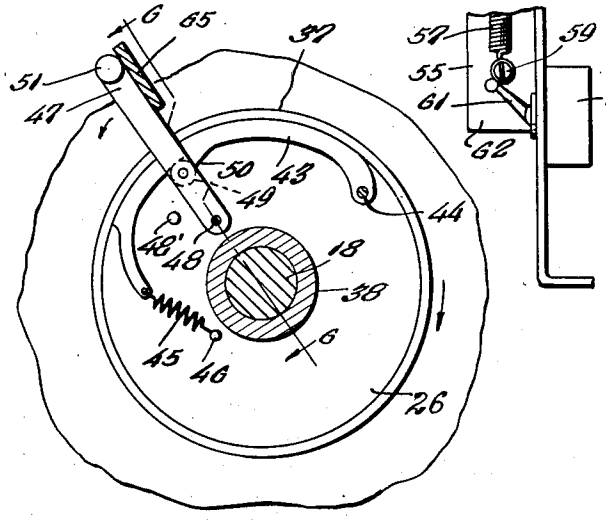

Fig. 5.

Inventor

Armond W. Braun

By Clarence A. O'Brien

Attorney

Feb. 22, 1944. A. W. BRAUN 2,342,327

TIMING DEVICE

Filed June 30, 1941 4 Sheets-Sheet 4

Fig. 7.

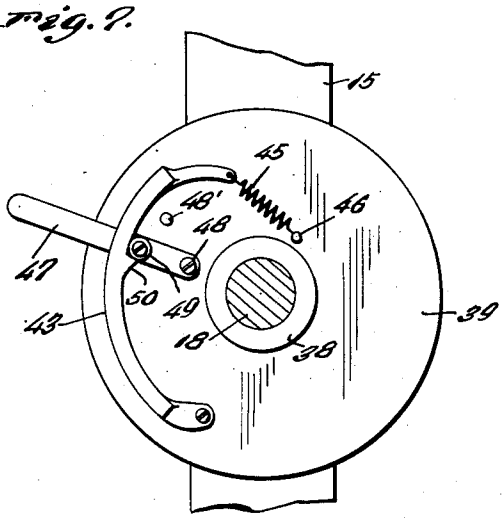

Fig. 11.

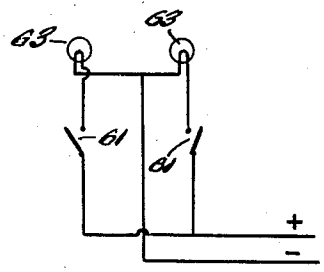

Fig. 9.

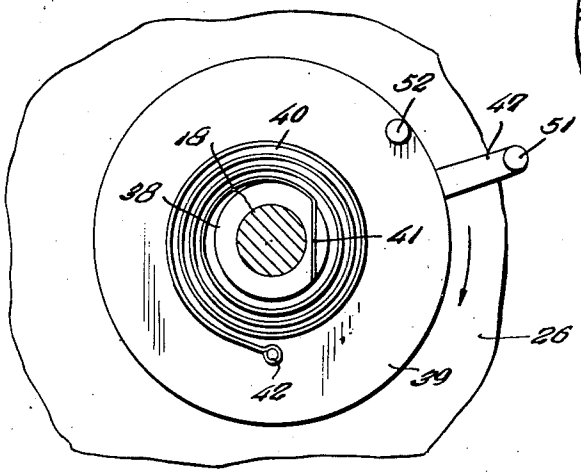

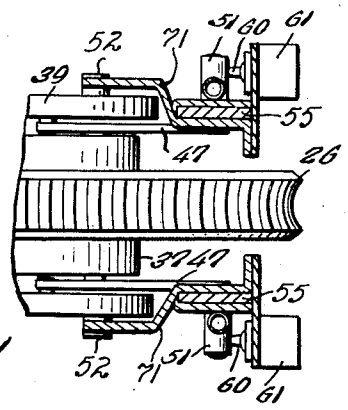

Fig. 8.

Inventor

Armond W. Braun

By Clarence O'Brien

Attorney

Patented Feb. 22, 1944

2,342,327

UNITED STATES PATENT OFFICE

2,342,327

TIMING DEVICE

Armond W. Braun, Grafton, Iowa

Application June 30, 1941, Serial No. 400,509

5 Claims. (Cl. 177—311)

My invention relates to improvement in timing devices, and to a timing device particularly adapted for the timing of milking machine operation, and the primary object of my invention is to provide a simple and efficient arrangement of this character whereby over-milking or under-milking of cows is eliminated.

Other important objects and advantages of my invention will be apparent from a reading of the following description taken in connection with the appended drawings, wherein for purposes of illustration I have shown a preferred embodiment of my invention.

In the drawings:

Figure 1 is a general side elevational view of a dual timer in accordance with the present invention showing the same operatively connected to the pump rod of the milker.

Figure 2 is an enlarged transverse vertical sectional view taken along the line 2—2 of Figure 1 and looking toward the right in the direction of the arrows.

Figure 3 is a fragmentary side elevational detail showing the ratchet wheel pawl in operative position.

Figure 4 is a fragmentary elevational detail showing one of the clutch shoes applied to a drum.

Figure 4*a* is a fragmentary view similar to Figure 4 but showing the switch in another position.

Figure 5 is a fragmentary elevational detail showing the clutch shoe applied to its drum in operative position.

Figure 6 is a fragmentary transverse vertical sectional view taken through Figure 5 along the line 6—6 and looking in the direction of the arrows.

Figure 7 is a fragmentary sectional and elevational view showing the opposite side of the clutch or brake shoe and drum arrangement shown in Figure 9.

Figure 8 is a fragmentary horizontal sectional view taken through Figure 1 along the line 8—8 and looking downwardly in the direction of the arrows.

Figure 9 is a fragmentary outside sectional elevational view of one of the brake drums showing the return spring associated therewith.

Figure 10 is a fragmentary enlarged sectional elevational detail showing the bell and its sounder.

Figure 11 is a wiring diagram showing the signal bulbs and their switch equipped connections with suitable source of current (not shown).

Referring in detail to the drawings, the numeral 5 generally designates the frame which is characterized by a horizontal plate 6 from the rear end of which rises the vertical split plate 7 which curves forwardly at its upper end as indicated by the numeral 8 to join the upper horizontal portion 9. Upper and lower cross members 10 and 11, respectively, extend across the upper portion 9 and the lower portion 6 of the frame, the upper cross member 10 having the right angularly depending portions 12 which terminate in the inverted L-shaped portions 13. To the inner sides of the portions 12 are bolted at 14 the upper ends of relatively heavy vertical bars 15 which have laterally inturned feet 16 at their lower ends bolted at 17 to the underside of the cross member 11. The horizontal rotary shaft 18 turns in bearing openings 19 in the intermediate portions of the bars 15 and timing disks 20 are mounted on the ends of the shaft 18 outwardly of the bars 15, with the dependent portion of the L-shaped flange 13 lying along the outer side of the upper portion of the disk as indicated in Figures 1 and 2. The disks 20 are rotatable on the shaft 18 to set the same. The timing disks 20 have annular projections 21 in which are formed circumferentially spaced depressions 22 which are spaced to correspond to one-half minute intervals and in which are adapted to seat the detents 23 on the spring fingers 24 whose lower ends are bolted as indicated by the numeral 25 to the outside of the lower parts of the bars 15 whereby each timing disk is held in the position in which it is set by rotating the same until the detent 23 springs into a selected one of the openings 22. In the case of Figure 1 the timing disk is set for operation of the timer for a period of six and one-half minutes, at the expiration of which time one of the bulbs will be lit and the bell will be operated to warn the attendant that the end of the selected milking period for the particular cow has been reached.

Fixed at the middle of the shaft 18 is the relatively large worm wheel 26 which is in approximately ten and one-half to one ratio with the worm shaft 27 with whose thread it is in mesh, the said worm shaft being supported in bearings 28 and 29 mounted on the lower horizontal member 11 and extending from the front of the frame where it is provided with the ratchet gear wheel 30 which has 48 teeth 31 corresponding to the forty-eight strokes to the minute which is the operation rate of the usual pump rod 32 of the milker (not shown).

The upper end of the milker plunger 32 is abutted with the normally depressed outer end of the U-shaped ratchet yoke 33 which is swingably mounted on the outer end of the worm shaft 27

on opposite sides of the ratchet gear wheel 30 as indicated in Figures 1 and 2 of the drawings, with a ratchet dog 34 pivoted between the sides of the yoke as indicated by the numeral 35 and normally engaged with the teeth 31 of the ratchet gear wheel by a spring 36 stretched between an outer part of the dog 34 and the yoke 33. The arrangement is that upon each upstroke of the plunger 32 of the milker the ratchet wheel 30 will be turned the distance of one ratchet tooth 30 in a counterclockwise direction as indicated by the arrow in Figure 2 of the drawings. The large worm wheel 26 is characterized by the presence on the opposite sides thereof of similar annular clutch housings 37 which are concentric with respect to the shaft 18. Between the opposite sides of the worm wheel 26 and the vertical bars 15 the shaft 18 has rotatably mounted thereon the hubs 38 which take up the space between the sides of the wheel 26 and the said bars, these hubs being characterized by circular disks 39 formed intermediate their ends and spaced axially outwardly from the clutch drum 37 as clearly shown in Figure 2 of the drawings, and spaced also from the bars 15.

Spiral return springs 40 are circumposed on the hubs 38 between the disks 39 and the bars 15 as shown in Figures 2 and 9 of the drawings, the inner end of the spring being inserted in a slot as indicated by the numeral 41 for anchoring purposes to the hub and the outer end of the spring being anchored on a pin 42 screwed into the adjacent bar 15.

Operative connection between the disks 39 and the springs 40 is achieved by means of clutch shoes 43 situated within the clutch drums and pivoted at one end as indicated by the numeral 44 to an eccentric portion of the companion disk 39 as shown in Figure 5, with the free end of the clutch shoe normally drawn away from contact with the interior of the clutch drum 37 by a contractile spring 45 anchored as indicated by the numeral 46 to the disks 39. A clutch operating lever 47 is pivotally mounted adjacent the center of the disks 39 on a pivot 48 and has intermediate its ends an applicator roller 49 operatively engaged with a shoulder 50 formed intermediate the ends of the clutch shoe 43 as indicated in Figure 5 of the drawings. The free end of the clutch applying and releasing lever 47 has a lateral arm 51 formed thereon for a purpose to be indicated. The opposite side of the disk 39 from that shown in Figure 5 has a lateral pin 52 projecting from adjacent the circumference of the disk as shown in Figure 9 of the drawings. A clutch lever stop pin 48' is provided on the disk 39 to limit the releasing movement of the lever 47 in the direction indicated by the arrow in Figure 5 of the drawings.

Slidable through twin openings formed in the upper element 10 of the casing are bar plungers 55 which are surmounted by hand grips 56 facilitating manually depressing the plungers. The plungers are maintained in the up, set position and returned thereto from a depressed position by contractile springs 57 which are stretched between a limit stop 58 preventing undue rise of the plungers and a laterally projecting screw 59 on the side of the plunger which also acts as an abutment for operating the toggle lever 60 of the light bulb operating switch 61 which is mounted on an adjacent element of the forepart of the frame 5 as indicated in Figure 1 of the drawings, the spring 57 being stretched between the elements 58 and 59. The bulbs 63 are mounted in hoods 64 secured to the upper end 9 of the frame behind the plungers 55 and, as indicated in Figure 11, the bulbs 63 are connected in parallel and each switch 61 is in series with a bulb. The connection between the bulbs is connected with one side of the current source (not shown) while both of the switch equipped sides are connected to the remaining side of the source, whereby the bulbs may be illuminated and extinguished independently of each other or simultaneously as requirements may develop.

The lower end 62 of the plunger is positioned to operatively engage the lateral arm 61 of the clutch operating lever 47 in one of the first actions of its descent, so as to operatively engage the corresponding clutch shoe 43 with the corresponding clutch drum and thereby operatively connect the corresponding hub with the worm drive wheel 26. It may be explained, at this point, that a wedging action of the clutch shoe 43 between the roller 49 and the clutch drum 37 retains the lever 47 in clutch engaging position, and when the clutch is released, the curvature of the inner face of the shoe 43 and the roller 49 are so related that the spring 45 retains the clutch disengaged. With a clutch engaged and the device in operation this causes the corresponding hub to revolve with the worm wheel 26 and to wind up the corresponding return spring 40, until the lateral arm 51 of clutch lever 47 comes in contact with the L-shaped arm 65, secured at the inner side of corresponding timing disk 20 as indicated in Figures 1 and 6 of the drawings by numerals 66, thereby releasing the clutch shoe 43 from operative engagement with the clutch drum 37 and allowing the corresponding return spring 40 to return to its hub assembly 38 in a reverse direction. Therefore, as lateral arm 51 of clutch lever 47, which is part of the hub assembly, is about to complete its reversed rotation it engages and moves the toggle switch lever 60 upwardly to closed position to energize the corresponding bulb 63 and thereby indicate to the attendant that the selected milking period has come to an end, so that he may disconnect the milker from the particular cow and thereby prevent over-milking of the cow.

The bells 66' are mounted at the corresponding sides of the lower frame member 6, in a position to have the corresponding one of the flexible strikers 67 thereof sharply depressed into contact with and ring the bell by the arrival against the upper sides of the strikers, of the lateral pin 52 of disk 39, as shown under Figures 9 and 10 of the drawings, so as to audibly warn the attendant of the fact that the end of the selected period of milking for the particular cow has been reached, this warning being in addition to the operation of the corresponding bulb 63. The reverse rotation of hub assembly 38 is stopped as lateral pin 52 comes in contact with finger 71, which extends down from upper portion of frame 9 as shown in Figure 1. When it is desired to set either unit of the dual timer for signal operation at the end of any other intervals of time, all that is necessary to do is to rotate the corresponding disks 20 until the detent 23 on the spring 24 drops in the depression 22 corresponding to the selected period. To prevent rotation of the ratchet-wheel 30, a ratchet pawl 68 is pivoted as indicated by the numeral 69 on the front vertical frame member 70 with the pawl depending into engagement with the

teeth 31 of the ratchet-wheel as indicated in Figure 3 of the drawings.

Although I have shown and described herein a preferred embodiment of my invention, it is to be definitely understood that I do not desire to limit the application of the invention thereto except as may be required by the scope of the subjoined claims.

Having described the invention, what is claimed as new is:

1. A timer for a milking machine or the like having a regularly reciprocating element, said timer comprising a support, a worm drive shaft thereon, a ratchet wheel affixed thereto, a ratchet dog supported in operative relation to said ratchet wheel, means for operating said ratchet dog, said means being operatively engaged with said reciprocating element of the milking machine, a driven shaft rotatably mounted on said support, a worm wheel fixed on said driven shaft and being in mesh with said worm shaft, a clutch drum fixed on a side of said worm wheel, a hub freely rotatable on said driven shaft, a normally retracted clutch shoe pivoted on said hub and positioned within said drum, a clutch shoe applying lever pivoted on said hub and operatively engageable with the clutch shoe to apply the same to the interior of said drum, a manual plunger on said support arranged to be depressed to operatively engage said clutch shoe applying lever to apply the clutch shoe to the interior of the drum to connect said worm wheel and the hub for rotation together, means to release the clutch applying lever, return spring means for returning said hub to original position after rotation with said worm wheel, signal means on said support including operating elements arranged for operation by the return rotation of the hub, and means for limiting return rotation of the hub.

2. A timer for a milking machine or the like having a regularly reciprocating element, said timer comprising a support, a worm drive shaft thereon, a ratchet wheel affixed thereto, a ratchet dog supported in operative relation to said ratchet wheel, means for operating said ratchet dog, said means being operatively engaged with said reciprocating element of the milking machine or the like, a driven shaft on said support, a worm wheel fixed on said driven shaft and being in mesh with said worm shaft, a clutch drum on a side of said worm wheel, a hub freely rotatable on said driven shaft, a normally retracted clutch shoe pivoted on said hub and positioned within said drum, a clutch shoe operating lever pivoted on said hub and operatively engageable with the clutch shoe to apply the same to the interior of said drum, a manual plunger on said support arranged to be depressed to operatively engage said clutch shoe applying lever to apply the clutch shoe to the interior of the drum to connect said worm wheel and hub for rotation together, means to release the clutch applying lever, return spring means for returning said hub to initial position after rotation with said worm wheel, indicating means arranged for operation by said hub as said hub is rotated from an operated position toward its initial position, stop means for limiting the return of said hub to said initial position, a timing disk rotatable on said driven shaft, circumferentially spaced depressions formed in said timing disk, a releasable detent on said support for engaging one of the depressions at a time to releasably hold the disk from rotating, a reference point on said support relative to which said disk is arranged to be rotatably positioned to predetermine the timing period, and a lateral projection on said timing disk for operatively engaging the clutch shoe applying lever to release the clutch shoe at the end of the time period.

3. A timing device for a milking machine or the like having a vacuum line carrying a regularly pulsating vacuum, said timing device comprising a support, a worm drive shaft thereon, a ratchet wheel affixed thereto, a ratchet dog supported in operative relation to said ratchet wheel, and operative to actuate the ratchet wheel step by step, a driven shaft on said support, a worm wheel fixed on said driven shaft and being in mesh with said worm shaft, a clutch drum fixed on a side of said worm wheel, a hub freely rotatable on said driven shaft, a normally retracted clutch shoe pivoted on said hub and positioned within said drum, a clutch shoe applying lever pivoted on said hub and operatively engageable with the shoe to apply the same to the interior of the drum to connect the hub and drum for rotation together, a manual plunger on said support arranged to be depressed to operatively engage said clutch shoe applying lever to apply the clutch shoe, return spring means for returning said hub to initial position after rotation with said worm wheel, signal means conditioned for operation by said clutch applying lever as the hub returns toward its initial position, driving means for predetermining the elapsed time between the depression of the manual plunger and application of the clutch shoe and the subsequent release of the clutch shoe from engagement with the drum, said timing means comprising a disk rotatable on said driven shaft and being formed with circumferentially spaced peripheral depressions, a releasable detent on said support for engaging in any one of said depressions to hold the disk in a period designating position, and a projection on said disk engageable with said clutch shoe applying lever to release said clutch from the drum and thereby disconnect the drum from the hub at the end of the selected period of elapsed time.

4. A timer according to claim 1 wherein said signal means comprises an electric bulb connected in an energized electric circuit and a switch having an operating member arranged to be actuated by said clutch lever.

5. A timer according to claim 3 wherein said signal means comprises a sounder and a striker therefor, said striker being operative by said hub.

ARMOND W. BRAUN.