A. D. TRENOR.

AUTOMATIC DIRECTING SYSTEM FOR GUIDE LIGHTS.

APPLICATION FILED NOV. 13, 1917. RENEWED SEPT. 28, 1920.

1,377,294.

Patented May 10, 1921.

3 SHEETS—SHEET 1.

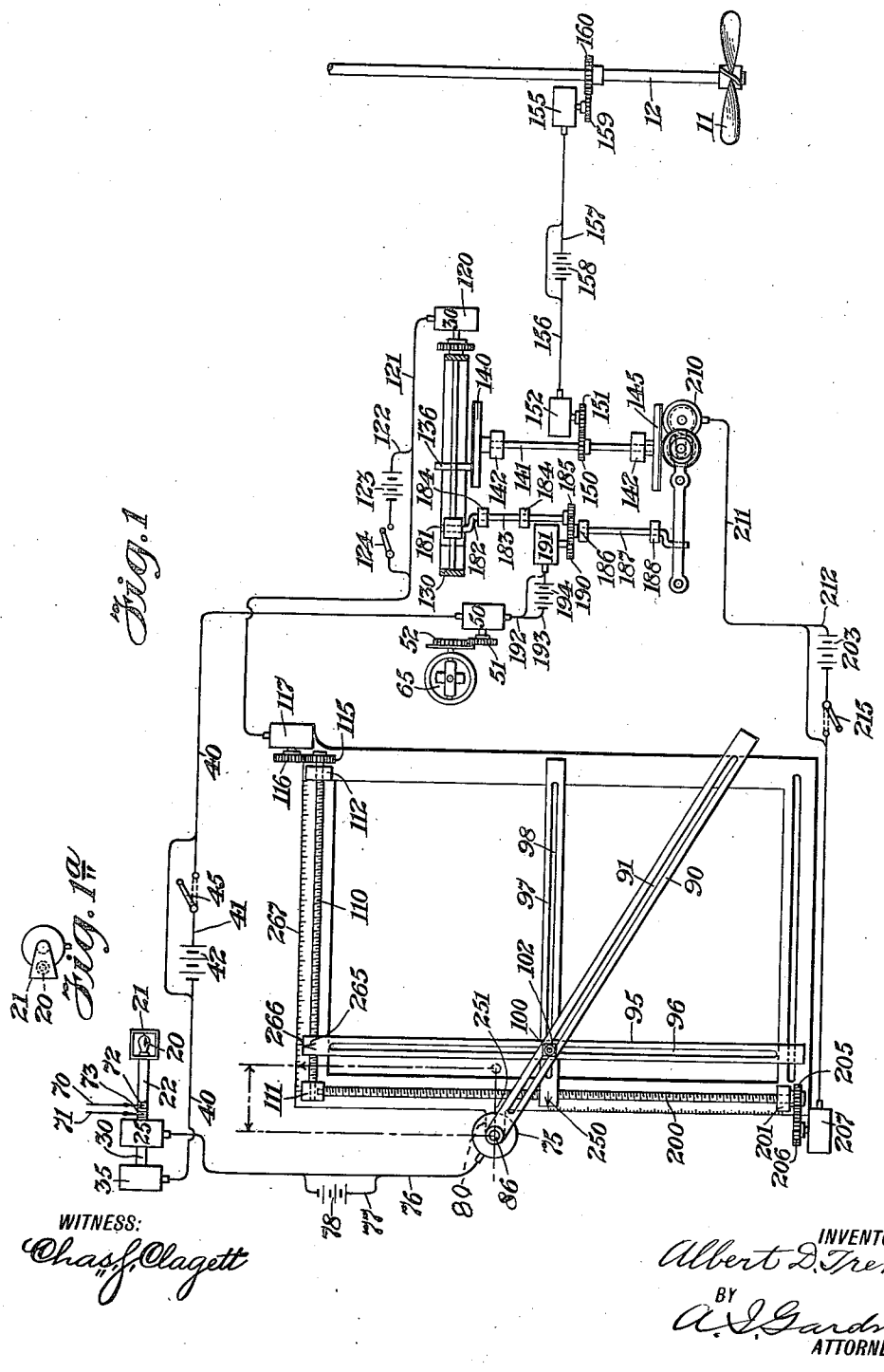

Fig. 1

Fig. 1a

WITNESS:

Chas. F. Clagett

INVENTOR

Albert D. Trenor.

BY

A. D. Gardner

ATTORNEY

A. D. TRENOR.

AUTOMATIC DIRECTING SYSTEM FOR GUIDE LIGHTS.

APPLICATION FILED NOV. 13, 1917. RENEWED SEPT. 28, 1920.

1,377,294.

Patented May 10, 1921.

3 SHEETS—SHEET 2.

Fig. 2

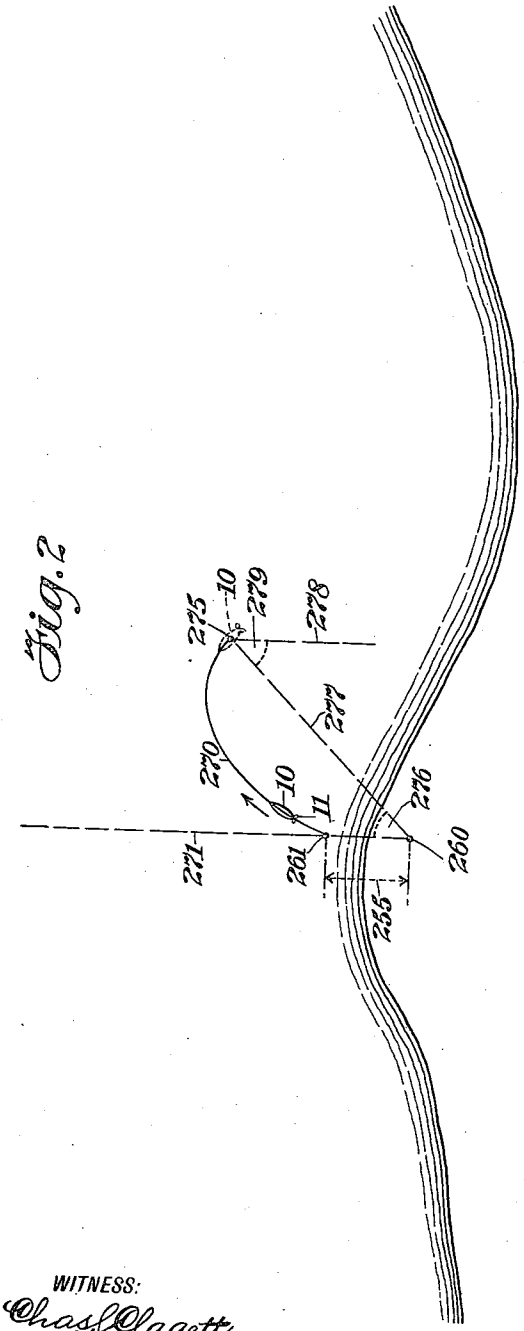

Fig. 4

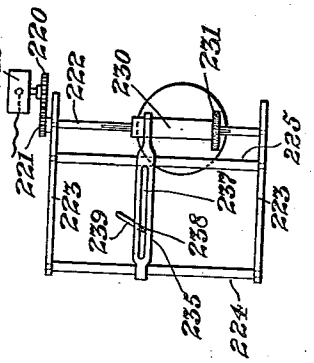

Fig. 3

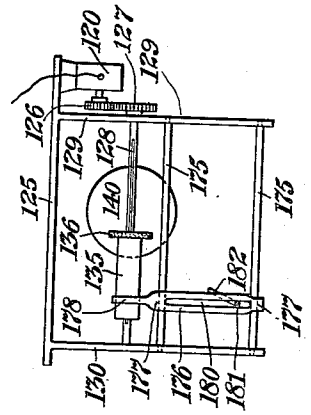

WITNESS:

Chas. J. Clagett

INVENTOR

Albert D. Trenor.

BY

A. D. Gardner

ATTORNEY

A. D. TRENOR.

AUTOMATIC DIRECTING SYSTEM FOR GUIDE LIGHTS.

APPLICATION FILED NOV. 13, 1917. RENEWED SEPT. 28, 1920.

1,377,294. Patented May 10, 1921.

3 SHEETS—SHEET 3.

Fig. 5

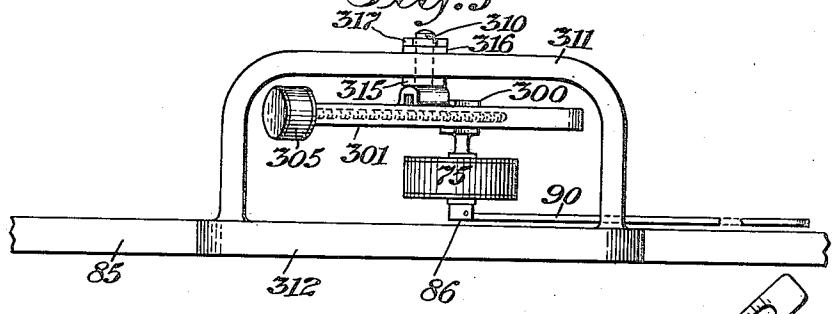

Fig. 6

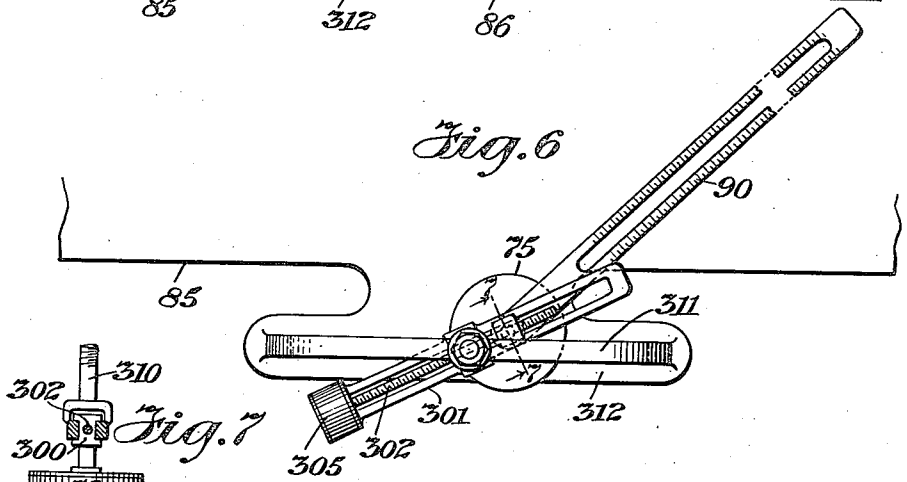

Fig. 7

Fig. 8

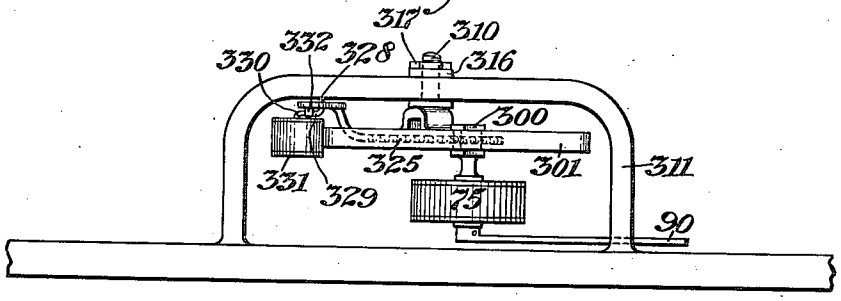

Fig. 9

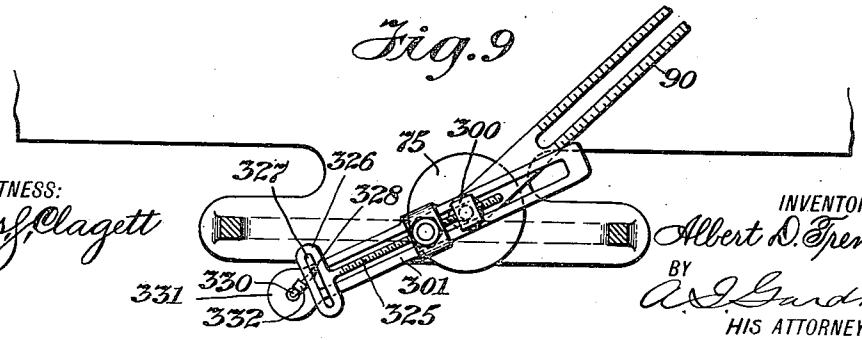

WITNESS:
Chas. J. Clagett

INVENTOR
Albert D. Trenor
BY
A. D. Gardner
HIS ATTORNEYS

UNITED STATES PATENT OFFICE.

ALBERT D. TRENOR, OF NEW YORK, N. Y., ASSIGNOR TO JOHN HAYS HAMMOND, JR., OF GLOUCESTER, MASSACHUSETTS.

AUTOMATIC DIRECTING SYSTEM FOR GUIDE-LIGHTS.

1,377,294. Specification of Letters Patent. Patented May 10, 1921.

Application filed November 13, 1917, Serial No. 201,886. Renewed September 28, 1920. Serial No. 413,438.

To all whom it may concern:

Be it known that I, ALBERT D. TRENOR, a citizen of the United States, and a resident of the city of New York, in the county of New York and State of New York, have invented certain new and useful Improvements in Automatic Directing Systems for Guide-Lights, of which the following is a specification.

Some of the objects of this invention are to provide an automatic system whereby a guide light or position revealing light movably mounted upon a vessel is always directed toward a given stationary observation point while the vessel is moving either at a constant or at a varying rate over any desired course; and to provide other improvements as will appear hereinafter.

In the accompanying drawings, Figure 1 is a diagrammatic top plan view of a directing system for guide lights constructed in accordance with this invention; Fig. 1ª represents a detail in plan of the position revealing parts; Fig. 2 is a diagrammatic plan view explanatory of the operation of the same; Figs. 3 and 4 are an end elevation of details of the same; Figs. 5 and 6 are a fragmentary side elevation and a top plan view of a modified detail of the same; Fig. 7 is a section on the line 7—7 of Fig. 6; and Figs. 8 and 9 are a fragmentary side elevation and a fragmentary top plan view of a further modified detail of the same.

One embodiment of this invention comprises a system which is shown as mounted upon a movable body, such, for instance, as a marine vessel 10 (see Fig. 2), or other movable body, provided with a propeller 11 mounted upon a shaft 12 arranged to be rotated about a fixed axis by any suitable means to drive the body in the direction of the shaft. This improved system includes a guide light or position revealing light 20 which is arranged in any suitable position upon the movable body or boat 10 to be always visible from a given fixed observation point when the light is facing toward the point. The light 20 may be in the form of an electric lamp arranged to be energized as hereinafter described, or may be in any other suitable form, and is arranged within and rigidly secured to a hollow flaring shield 21 of opaque material, the surface of which is preferably covered with lamp black or any other light absorbent or non-reflecting material. The shield 21 serves to conceal the light 20 from view except at points within a slender imaginary cone having its apex at the light 20.

For automatically causing the light 20 and its shield 21 to be directed always toward a given stationary observation point, the light 20 and the shield 21 rigid therewith are mounted upon and rigidly secured to the upper end of a vertical spindle 22 which projects upwardly from a rotary electrical repeating device 25 of any well known or suitable construction, whereby the spindle 22 is caused to be rotated with respect to the boat 10 about a normally vertical axis fixed with respect to the boat 10 and coinciding with the longitudinal axis of the spindle 22. The rotary repeating device 25 is rigidly secured to the upper end of a vertical spindle 30, which is coaxial with the upper spindle 22 and which extends upwardly from and is arranged to be rotated by a stationary electrical repeating device 35 of any well known or suitable construction which is rigidly secured to the boat or other movable body 10.

For actuating the stationary repeating device 35 to cause its spindle 30 to be held against rotation in space while the boat 10 is being rotated or diverted from its course, or in other words, to produce a relative rotation between the spindle 30 and the boat 10 equal to the angle through which the boat 10 may be rotated in changing its course from time to time, the stationary repeating device 35 is electrically connected to one end of a four wire cable 40 which includes a return wire 41 arranged to be energized by a battery 42. This four wire cable 40 is controlled by a switch 43 and electrically connects the stationary repeater 35 with a stationary electrical motion transmitter 50 of any well known or suitable construction, and which is arranged to be actuated by a rotary pinion 51 which engages and is actuated by a gear 52 which is arranged to have a relative movement of rotation with respect to the boat 10 about a normally vertical axis fixed with respect to the boat, and the gear 52 is arranged to be held in a fixed position of rotation in space in a well known manner by means of a gyroscope 65 carried by the boat 10, the arrangement being such that as the boat

10 is diverted from its course, or, in other words, rotated about a vertical axis, a relative rotation will be produced between the gear 52 and the boat which will cause a corresponding rotation between the pinion 51 and the boat 10, and this angle of rotation will be equal to the angle of rotation of the boat and will be transmitted by the transmitter 50 to the stationary transmitter 35, and will cause a corresponding relative rotation of the vertical spindle 30 and the rotary transmitter 25 and the lamp 20 carried thereby, which would cause the lamp 20 to be always pointed in a fixed direction determined by the gyroscope 65, unless otherwise influenced.

In order to cause the light 20 to face always toward the fixed observation point regardless of the direction of movement or rate of movement of the boat 10, this invention provides means for actuating the rotary repeating device 25 to rotate the spindle 22 and the lamp 20 independently of the stationary repeater 35, and at a rate which is controlled by the rate of movement of the boat and the angle through which it is diverted from a predetermined fixed line or direction, which for convenience may be referred to hereinafter as the basal line, and which may be a line drawn through the fixed point of observation in a fixed direction determined by the gyroscope 65 or in any other predetermined direction.

For the foregoing purpose, the rotary repeating device 25 is electrically connected to a stationary auxiliary electrical transmitter 75 in a well known manner by means of a four-wire cable 76 including a return wire 77 arranged to be energized by a battery 78. When the light 20 is in the form of an electric lamp it may be energized by means of a current supplied from any suitable source through two wires 70, 71 which lead from the source to two stationary brushes 72 and 73 which slidably engage respectively two slip rings surrounding and fixedly secured to but insulated from the spindle 22 and connected respectively by two insulated conductors to the two terminals of the lamp 20.

For actuating the auxiliary transmitter 75 this transmitter is secured in a fixed position upon a lug 80 which projects from and is rigid with a substantially rigid, flat, rectangular base-plate 85 which is secured in a fixed position upon the boat 10. The transmitter 75 is provided with a spindle 86 which is arranged to rotate about an axis fixed with respect to and perpendicular to the plate 85. Spaced slightly above and parallel to the plate 85 is an arm 90 which is rigidly secured at one end to the spindle 86 and which is provided with an elongated slot 91 extending longitudinally thereof. Extending between the arm 90 and the plate 85 in a direction parallel to one of the longitudinal edges of the plate 85 is a longitudinal bar 95 which is provided with an elongated slot 96 extending longitudinally thereof. This bar 95 is parallel to the plate 85 and is spaced slightly from the under surface of the arm 90. Between the longitudinal bar 95 and the plate 96 is a transverse bar 97 which is provided with an elongated slot 98 extending longitudinally thereof. This transverse bar 97 extends in a direction perpendicular to the longitudinal bar 95 and parallel to the plate 85 and is spaced slightly from the under surface of the longitudinal bar 95. A pin 100 extends snugly but slidably through the slots 91, 96 and 98 of the arm 90, the longitudinal bar 95 and the transverse bar 97 respectively and is held against longitudinal movement by means of a head or nut 102 secured to each end of the pin.

For causing the longitudinal bar 95 to travel transversely of the plate 85 at a rate proportional to the component of the rate of movement of the boat along the predetermined "basal" line or direction a lead screw 110 is threaded through one end of the bar 95 and is rotatably mounted and held against longitudinal movement in terminal bearings 111 and 112 rigid with the plate 85. A gear 115 is rigidly secured to one end of the screw 110 and is arranged to be actuated by a pinion 116 which is arranged to be rotated about an axis fixed with respect to the plate 85 by means of an electrical repeating device 117 which is rigidly secured to the plate 85 and which is electrically connected to a stationary secondary transmitting device 120 by means of a four-wire cable 121 including a return wire 122 arranged to be energized by a battery 123 and controlled by a switch 124. The secondary transmitting device 120 is mounted upon a base-plate 125 fixed with respect to the boat 10 and is arranged to be actuated by a pinion 126 which is arranged to be rotated about an axis fixed with respect to the plate 125 and parallel thereto by means of a gear 127 which is rigidly secured to one end of a shaft 128 which is terminally supported for rotation in bearings provided therefor in two standards 129 and 130 which are perpendicular to and rigidly secured to the plate 125. Loosely surrounding the shaft 128 and slidably longitudinally thereof but held against rotation with respect thereto is a cylindrical sleeve 135 which carries at one end rigidly secured thereto a friction roller 136 which engages against a flat friction disk 140 arranged in a plane parallel to the shaft 128 and which is rigidly secured to one end of a shaft 141 which is mounted to rotate about a fixed axis in bearings 142, which are fixed with respect to the boat 10, the shaft 141 being provided at its other end with a flat secondary friction disk 145 rigidly

secured thereto for a purpose which will appear hereinafter.

The shaft 141 is arranged to be rotated at a rate approximately proportional to the rate of movement of the boat by means of a gear 150 which is rigidly secured to the shaft 141 and which is actuated by a pinion 151 which is rotated about a fixed axis by means of a stationary repeating device 152 which is electrically connected to a stationary transmitting device 155 by means of a four-wire electric cable 156 which includes a return wire 157 arranged to be energized by a battery 158. The transmitting device 155 is arranged to be actuated by a pinion 159 which engages a pinion 160, which is rigidly secured to the propeller shaft 12, to cause the transmitting device 155 to be actuated in accordance with the rate of movement of the propeller shaft 12 and consequently approximately in proportion to the rate of movement of the boat 10 longitudinally.

For sliding the roller 136 longitudinally of the shaft 128 at a rate proportional to the component of the rate of movement of the boat along the fixed basal line two rods 175 are arranged parallel to the shaft 128 and are terminally secured in fixed positions in the fixed standards 129 and 130, and a transverse bar or slider 176 is provided with apertures 177 through which the bars 175 extend loosely to permit the slider 176 to slide along the bars 175. The slider 176 is provided at one end with a yoke 178 which fits loosely in an annular groove provided therefor in thes leeve 135. The slider 176 is also provided with a slot 180 extending longitudinally thereof and into which slidably engages a pin 181 perpendicular to and rigid with a crank arm 182 which is rigid with and perpendicular to a shaft 183 which is arranged to rotate about a fixed axis in fixed bearings 184 and which is provided at its inner end with a pinion 185 rigidly secured thereto and which engages and is actuated by a pinion 186 rigidly secured to a shaft 187 extending parallel to the shaft 183, and arranged to rotate about a fixed axis in fixed bearings 188. The pinion 186 is arranged to be rotated at a rate proportional to the rate of angular divergence of the boat with respect to the basal line, by means of a pinion 190 which is rotated about a fixed axis by means of a stationary electrical repeating device 191, which is connected to the electrical transmission device 50 by means of a four-wire cable 192 including a return wire 193 arranged to be energized by a battery 194.

For moving the transverse bar 97 longitudinally of the plate 85 at a rate proportional to the component of the rate of movement of the boat 10 along a line perpendicular to the fixed basal line, a lead-screw 200 is threaded through one end of the transverse bar 97 and extends in a direction perpendicular to the bar 97 and parallel to one edge of the plate 85. This lead-screw 200 is mounted at one end in the stationary bearing 111 and at its other end in a stationary lug 201, which is rigid with the plate 85. A pinion 205 is rigidly secured to one end of the lead-screw 200 and is arranged to be actuated by a pinion 206 which is arranged to be rotated about a fixed axis by means of an electrical repeating device 207, which is connected to a stationary electrical transmission device 210 by means of a four-wire cable 211, which includes a return wire 212 which is arranged to be energized by a battery 203, the cable 211 being preferably controlled by a switch 215. The electrical transmission device 210 is arranged to be actuated by a pinion 220 (see Fig. 4) which is arranged to rotate about a fixed axis and which is actuated by a pinion 221 which is rigidly secured to one end of a shaft 222 which is terminally supported in two parallel fixed plates 223, 223 to rotate about a fixed axis. Extending between the two plates 223, 223 are two rigid cylindrical rods 224 and 225 which are parallel to the shaft 222 and which are terminally secured fixedly to the two plates 223, 223. Surrounding the shaft 222 and slidable longitudinally thereof but held against rotation with respect thereto is a sleeve 230 which has rigidly secured to one end thereof a secondary friction roller 231 which engages the hereinbefore described secondary friction disk 145.

For sliding the secondary friction roller 231 longitudinally of the shaft 222 to vary the position of the friction roller 231 upon the secondary friction disk 145 a transverse bar or slider 235 is provided, which has two cylindrical openings through which respectively extend loosely the two fixed bars 224, 225. The slider 235 is provided with a slot 237 extending longitudinally thereof, in which snugly but slidably engages a crank pin 238 which is rigid with a crank arm 239 which is rigid with the hereinbefore described shaft 187, which is aranged to be rotated at a rate approximately proportional to the rate of angular divergence of the boat 10 from the fixed basal line.

In the operation of the form of this invention shown in Figs. 1 to 4, the electrical motion repeaters 117 and 207 are thrown out of operation by opening the switches 124 and 215 respectively, and the bars 95 and 97 of the plate 85 are adjusted by rotating the lead screws 110 and 200 manually or otherwise until the longitudinal axis of the pin 100 lies in a plane extending through the axis of the spindle 86, and perpendicular to the longitudinal axis of the longitudinal bar 95, as indicated when the arrow 250 provided therefor upon the transverse bar 97

is opposite a corresponding mark or graduation 251 provided therefor upon a corresponding edge of the plate 85, and so that the longitudinal axis of the pin 100 is also spaced from the axis of the spindle 86 a distance equal to the known distance 255 between the basal or observation point 260 and the anchorage or starting point 261 of the boat 10, as indicated when a mark 265 provided therefor on one end of the longitudinal bar 95 is opposite the corresponding graduation 266 of a scale 267 provided along the corresponding transverse edge of the plate 85. The lamp 20 upon the boat 10 and its shield 21 are then adjusted upon the boat to face in the direction of the basal point or point of observation 260 from the anchorage or starting point 261 or in a direction parallel thereto, according to the location of the lamp 20 upon the boat 10. The switches 124 and 215 are then closed, and as the boat 10 moves along any line, for instance, a curved line 270 from the starting point 261, any divergence of the longitudinal axis of the boat with respect to the basal line 271 causes the boat 10 to rotate with respect to the gyroscope 65, and consequently causes a corresponding relative rotation of the gear 52, and consequently of the pinion 51 of the transmitting device 50, and this angular movement of the pinion 51 is transmitted by the transmitter 50 to the repeater 191 which simultaneously actuates the crank shafts 183 and 187 in opposite directions respectively to cause the two friction rollers 136 and 231 (see Figs. 3 and 4) to be moved radially toward or away from the centers of the corresponding friction disks 140 and 145 respectively to modify the action of the friction disks upon the friction rollers 136 and 231 in accordance with the rate of angular deviation of the longitudinal axis of the boat or direction of movement of the boat 10 with respect to the basal line 271 (see Fig. 2). The angular movement of the two friction rollers 136 and 231 is now transmitted by the transmitters 120 and 210 respectively, to the repeaters 117 and 207 respectively, whereby the lead screws 110 and 200 are rotated accordingly, to move the longitudinal bar 95 and the transverse bar 97 proportional to the rate of movement of the boat 10 in a direction along the basal line 271 and along a line perpendicular to the basal line 271 respectively. The movements of the bars 95 and 97 are transmitted to the arm 90 by the action of the pin 100, and cause the arm 90 to move through an angle with respect to its initial position which is equal to the angle between the basal line 271 and a line drawn through the basal point or observation point 260 and the boat 10.

For instance, when the boat 10 is at the point 275 on its course 270 (see Fig. 2), the arm 90 will have been rotated from its initial position through an angle 276 equal to the angle between the basal line 271 and an imaginary line 277 extending through the basal point 260 and the boat 10. This angular movement of the arm 90 is transmitted by the transmitter 75 through the four wire cable 76 to the rotary repeater 25, which acts to rotate the spindle 22 and the light 20 carried thereby independently of the stationary repeater 35 and vertical spindle 30, and through an angle equal to the angle 276 through which the boat 10 has moved away from the basal line 271 with respect to the observation point 260, consequently, the light 20 will be directed along a line toward the observation point 260. When the boat 10 is at the point 275, as shown in dotted lines in Fig. 2, if the light 20 were controlled only by the stationary repeater 35 through the action of the transmitter 50 controlled by the gyroscope, the light 20 would be caused to point along the line 278 parallel to the basal line 271, but owing to the independent rotation of the light 20 by the rotary repeater 25 under the action of the swinging arm 90 which is under the control of the gyroscope 65, and also of the propeller shaft 12, the light 20 is rotated through an additional angle 279 which is equal to the angle 276 through which the boat has been rotated bodily around the point of observation 260 with respect to the basal line 271, and consequently, the combined actions of the stationary repeater 35 and the repeater 25 maintain the light 20 always pointed toward the basal point or point of observation 260.

To compensate for the action of a steady current moving at a constant rate in a known direction, the transmitting device 75, instead of being arranged as shown in Fig. 1 and as hereinbefore described, may be arranged, as shown in Figs. 5, 6 and 7, to depend from a rectangular slider 300 rigid therewith and which is arranged to slide longitudinally of a normally horizontal supporting guide 301 which is provided with a lead-screw 302 extending horizontally in a slot provided therefor longitudinally of the supporting guide 301 and which is threaded through the slider 300 to move the slider 300 and the transmitter 75 carried thereby longitudinally of the supporting guide 301. The lead-screw 302 is held against longitudinal movement and is arranged to be rotated at a predetermined and adjustable rate by means of a spring motor 305 which is carried by one end of the supporting guide 301, the spring motor 305 being provided with any well known and suitable governor. In this construction the hereinbefore described transmitter 75 is inverted so that its hereinbefore described rotary spindle 86 depends downwardly from the transmitter 75 and is rigidly secured at its lower end to the hereinbefore described arm 90. The

supporting guide 301 is rigidly secured to a vertical spindle 310 extending upwardly therefrom and the upper end of which engages snugly but rotatably in a vertical yoke 311 which extends downwardly from the spindle 310 and which is rigidly secured to a rigid, horizontal plate or extension 312 which is arranged in a plane with and rigidly secured to or integral with the hereinbefore described horizontal plate 85, the arrangement being such that the auxiliary transmitter 75 may be positioned initially substantially as hereinbefore described and shown in Fig. 1. The vertical spindle 310 is provided beneath the yoke 311 with a collar 315 rigid with the spindle 310, and the upper end of the spindle 310 is provided with a washer 316 fitting loosely around this spindle and with a nut 317 which may be adjusted so as either to permit the spindle 310 to be rotatably adjusted as may be desired, or to clamp the spindle 310 in any fixed position of adjustment with respect to the yoke 311.

In the operation of the modified construction which is shown in part in Figs. 5, 6 and 7, the guiding support 301 is first adjusted rotatably in such a fixed position that the angle between the guiding support 301 and the transverse bar 97 (see Fig. 1) will be equal to the angle between the direction of the flow of the steady current and the direction of the basal line 271 (see Fig. 2). The governor of the spring motor 305 is then adjusted so as to cause the spring motor when in operation to rotate the lead-screw 302 at such a rate as to move the slider 300 in a direction opposite to the direction of movement of the current and at a rate proportional thereto. The auxiliary transmitter 75 is then placed in an initial position of adjustment corresponding to the position hereinbefore described and shown in Fig. 1, and in which the vertical rotary spindle 86 of the transmission device 75 will be in vertical alinement with the vertical spindle 310 carrying the guiding support 301, the yoke 311 being permanently positioned with respect to the plate 85 accordingly. The slide bars 95 and 97 of the plate 85 are now given an initial adjustment as hereinbefore described, and when the boat 10 starts from its starting anchorage 261 the spring motor 305 is also started to move the auxiliary transmitter 75 in such a manner as to compensate for the action of the steady current which is moving the boat in a known direction at a predetermined and constant rate.

To compensate for the harmonic motion of the boat 10 in a horizontal direction due to tides and without considering currents, instead of arranging the auxiliary transmitter 75 in either of the ways hereinbefore described, the auxiliary transmitter 75 may be arranged as shown in Figs. 8 and 9. In this modified arrangement the auxiliary transmitter 75 is supported as shown in Figs. 5, 6 and 7, upon the guiding support 301 which is mounted upon and rotatably adjusted with respect to a yoke 311, but instead of having the guiding support 301 provided with a lead-screw 302, as hereinbefore described, the guiding support 301 is provided with a rigid rod 325 which is rigidly secured at one end to the slider 300 and at its other end to a transversely extending bar or yoke 326 which is arranged in a horizontal plane and which is provided with a slot 327 extending longitudinally thereof and perpendicularly with respect to the rod 325. Slidably engaging in the slot 327 is a vertical crank pin 328 which is rigid with the upper end of a horizontal crank arm 329 which radiates from and is adjustably secured to a vertical crank shaft 330 which is arranged to be rotated at an adjustable rate by a spring motor 331 of any well known or suitable construction and which is provided with any well known or suitable adjustable governor for regulating the speed of the motor and consequently the rate of movement of the crank pin 328. The length of the crank arm 329 may be adjusted for the speed of tidal flow by means of an adjusting nut 332 provided for that purpose.

In the operation of the modified form of this invention shown in Figs. 8 and 9 the guiding support 301 is first suitably adjusted depending upon the known harmonic motion of the tide, and the auxiliary transmitter 75 is also placed in a suitable initial position. The speed of the motor 331 and the length of the arm 329 are then suitably adjusted and the motor 331 is started at the moment that the boat 10 leaves its point of anchorage 261 (see Fig. 2). The motor 331 then acts to move the auxiliary transmitter 75 in such a manner with respect to the other elements of the device as shown in Fig. 1 to compensate approximately for the known harmonic motion of the boat in a horizontal direction due to the tides and without considering currents.

Although only a few of many of the forms in which this invention may be embodied have been shown herein it is to be understood that the invention is not limited to any specific construction but might be applied in various forms without departing from the spirit of the invention or the scope of the appended claims.

Having thus fully described this invention, I claim:

1. The combination with a movable body, of position revealing means carried thereby and movable with respect thereto, and means automatically operative to cause said position revealing means to point continuously approximately toward a predetermined fixed point while said body is moving in a pre-

determined plane over an irregular course whereby said position revealing means is maintained visible from said fixed point.

2. The combination with a movable body, of a position revealing light carried by said body and movable with respect thereto, and means automatically operative to cause said light to be directed continuously toward a given fixed point while said body is moving upon an irregular course in a given plane.

3. The combination with a movable body, of position revealing means carried thereby and movable with respect thereto, and means automatically operative to cause said position revealing means to point continuously approximately toward a predetermined fixed point while said body is moving in a predetermined plane over an irregular course, said automatic means including stabilizing means carried by said body.

4. The combination with a movable body, of a position revealing light carried by said body and movable with respect thereto, and means automatically operative to cause said light to be directed continuously toward a given fixed point while said body is moving upon an irregular course in a given plane, said automatic means including stabilizing means carried by said body.

5. The combination with a movable body, of position revealing means carried thereby and movable with respect thereto, and means automatically operative to cause said position revealing means to point continuously approximately toward a predetermined fixed point while said body is moving in a predetermined plane over an irregular course, said automatic means including means carried by said body and arranged to be moved with respect thereto approximately at a rate dependent upon the rate of movement of said body.

6. The combination with a movable body, of a position revealing light carried by said body and movable with respect thereto, and means automatically operative to cause said light to be directed continuously toward a given fixed point while said body is moving upon an irregular course in a given plane, said automatic means including means carried by said body and arranged to be moved with respect thereto approximately at a rate dependent upon the rate of movement of said body.

7. The combination with a movable body, of position revealing means carried thereby and movable with respect thereto, means automatically operative to cause said position revealing means to point continuously approximately toward a predetermined fixed point while said body is moving in a predetermined plane over an irregular course, said automatic means including stabilizing means carried by said body, and means carried by said body and arranged to be moved approximately at a rate dependent upon the rate of movement of said body.

8. The combination with a movable body, of a position revealing light carried by said body and movable with respect thereto, means automatically operative to cause said light to be directed continuously toward a given fixed point while said body is moving upon an irregular course in a given plane, said automatic means including stabilizing means carried by said body, and means carried by said body and arranged to be moved approximately at a rate dependent upon the rate of movement of said body.

9. The combination with a movable body, of position revealing means carried thereby and movable with respect thereto, means automatically operative to cause said position revealing means to point continuously approximately toward a predetermined fixed point while said body is moving in a predetermined plane over an irregular course, said automatic means including stabilizing means carried by said body, and means controlled by said stabilizing means and arranged to be moved with respect to said body at any given moment approximately at a rate which is dependent upon the rate of movement of said body at said moment along a given plane and also dependent upon the rate of angular movement of said body at said moment with respect to a fixed basal line.

10. The combination with a movable body provided with propelling means carried thereby, of position revealing means carried by said body and movable with respect thereto, and automatic means for causing said position revealing means to point continuously approximately toward a fixed point while said body is moving upon an irregular course in a given plane, said automatic means including means carried by said body and arranged to be moved with respect thereto at a rate proportional to the rate of movement of said propelling means.

11. The combination with a movable body provided with propelling means carried thereby, of position revealing means carried by said body and movable with respect thereto, automatic means for causing said position revealing means to point continuously approximately toward a fixed point while said body is moving upon an irregular course in a given plane, said automatic means comprising stabilizing means carried by said body, and means controlled jointly by said stabilizing means and said propelling means for causing a relative movement between said position revealing means and said body.

12. The combination with a movable body provided with propelling means carried thereby, of position revealing means carried

by said body and movable with respect thereto, automatic means for causing said position revealing means to point continuously approximately toward a fixed point while said body is moving upon an irregular course in a given plane, said automatic means including a gyroscope, and means jointly controlled by said gyroscope and said propelling means.

13. The combination with a movable body, of propelling means carried thereby, position revealing means carried by said body and rotatable with respect thereto about an axis fixed with respect thereto, stabilizing means carried by said body, means for causing a relative rotation of said position revealing means about said axis with respect to said body at a rate controlled by said stabilizing means, and means for causing a relative rotation of said position revealing means about said axis at a rate controlled by the joint action of said stabilizing means and said propelling means.

14. The combination with a movable body, of propelling means carried thereby, position revealing means carried by said body and rotatable with respect thereto about an axis fixed with respect thereto, a gyroscope carried by said body, means for causing a relative rotation of said position revealing means about said axis with respect to said body at a rate controlled by said gyroscope, and means for causing a relative rotation of said position revealing means about said axis at a rate controlled by the joint action of said gyroscope and said propelling means.

15. The combination with a movable body, of position revealing means carried thereby and movable with respect thereto, and automatic means for causing said position revealing means to be pointed continuously approximately at a given fixed point while said body is moving upon an irregular course in a given plane, said automatic means including means for compensating for the action of a steady current moving at a constant rate in a known direction.

16. The combination with a movable body, of propelling means carried thereby, position revealing means carried by and movable with respect to said body, and automatic means for causing said position revealing means to point continuously approximately toward a given fixed point while said body is moving upon an irregular course in a given plane, said automatic means including means controlled by said propelling means and means coöperating with said propelling means for compensating for the action of a steady current moving at a constant rate in a known direction and acting upon said body.

17. The combination with a movable body, of a position revealing light carried thereby and movable with respect thereto, and means including a stabilizing device for maintaining said light continuously directed towards a given fixed point irrespective of the course of said body.

18. The combination with a movable body, of a position revealing means carried by said body and movable with respect thereto, and means, including a device arranged on said body to be moved with respect thereto approximately at a rate dependent upon the rate of movement of said body, for maintaining said revealing means continuously pointed toward a given fixed point irrespective of the course of said body.

Signed of New York, in the county and State of New York, this 3d day of November, A. D. 1917.

ALBERT D. TRENOR.