United States Patent

Britton et al.

[15] **3,706,863**

[45] **Dec. 19, 1972**

[54] MULTIPLE SWITCH ASSEMBLY FOR VENDING MACHINE SELECTING APPARATUS WITH IMPROVED MASTER SWITCH CONTROL

[72] Inventors: **Leon R. Britton**, Chicago; **Joseph K. Semerjian**, Franklin Park, both of Ill.

[73] Assignee: **The Seeburg Corporation**, Chicago, Ill.

[22] Filed: **Sept. 11, 1970**

[21] Appl. No.: **71,620**

[52] **U.S. Cl.**.....**200/5 R**, 200/5 E

[51] **Int. Cl.**.....**H01h 9/20**

[58] **Field of Search**.....200/5 R, 5 A, 5 E, 16 A, 159, 200/160

[56] **References Cited**

UNITED STATES PATENTS

2,932,816	4/1960	Stiefel et al.	200/5 E
3,487,178	12/1969	Stout	200/5 E
3,408,464	10/1968	Earleywine, Jr. et al.	200/16 A
3,396,247	8/1968	Rankin	200/159 R X
3,229,053	1/1966	Smith	200/159 R X

Primary Examiner—J. R. Scott

Attorney—Ronald L. Engel, Daniel W. Vittum, Jr., Gomer W. Walters and John A. Waters

[57] **ABSTRACT**

A selecting apparatus includes a plurality of selector input switches, each of which is representative of a character utilized to identify selections in a vending machine and each of which is individually actuatable by an associated actuator. Additional input switches are provided for supplemental switching functions. The actuators are adapted for displacement beyond the contact mating position in order to close a common master switch, which controls energization of the circuits containing the selector input switches, after the input switch has been closed. Each input switch actuator has a spring-biased contact holder and is assembled by utilizing a restraining collar with a latching member to position the spring.

17 Claims, 7 Drawing Figures

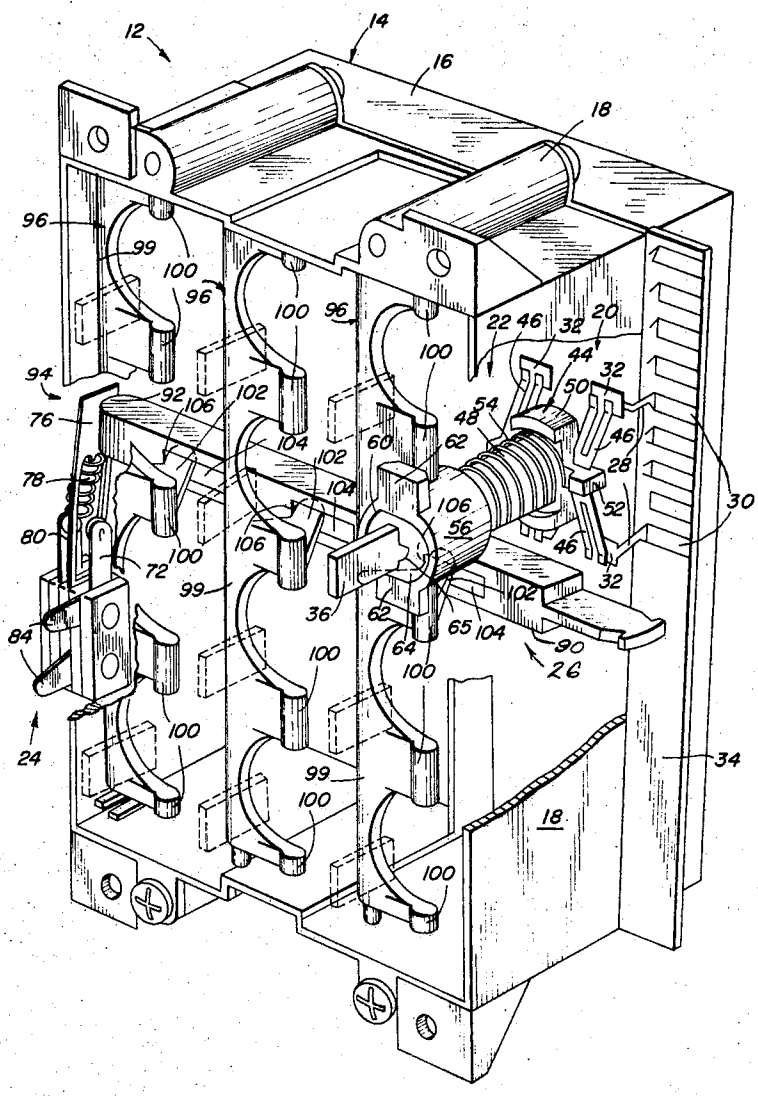

PATENTED DEC 19 1972

3,706,863

SHEET 1 OF 2

FIG. 1

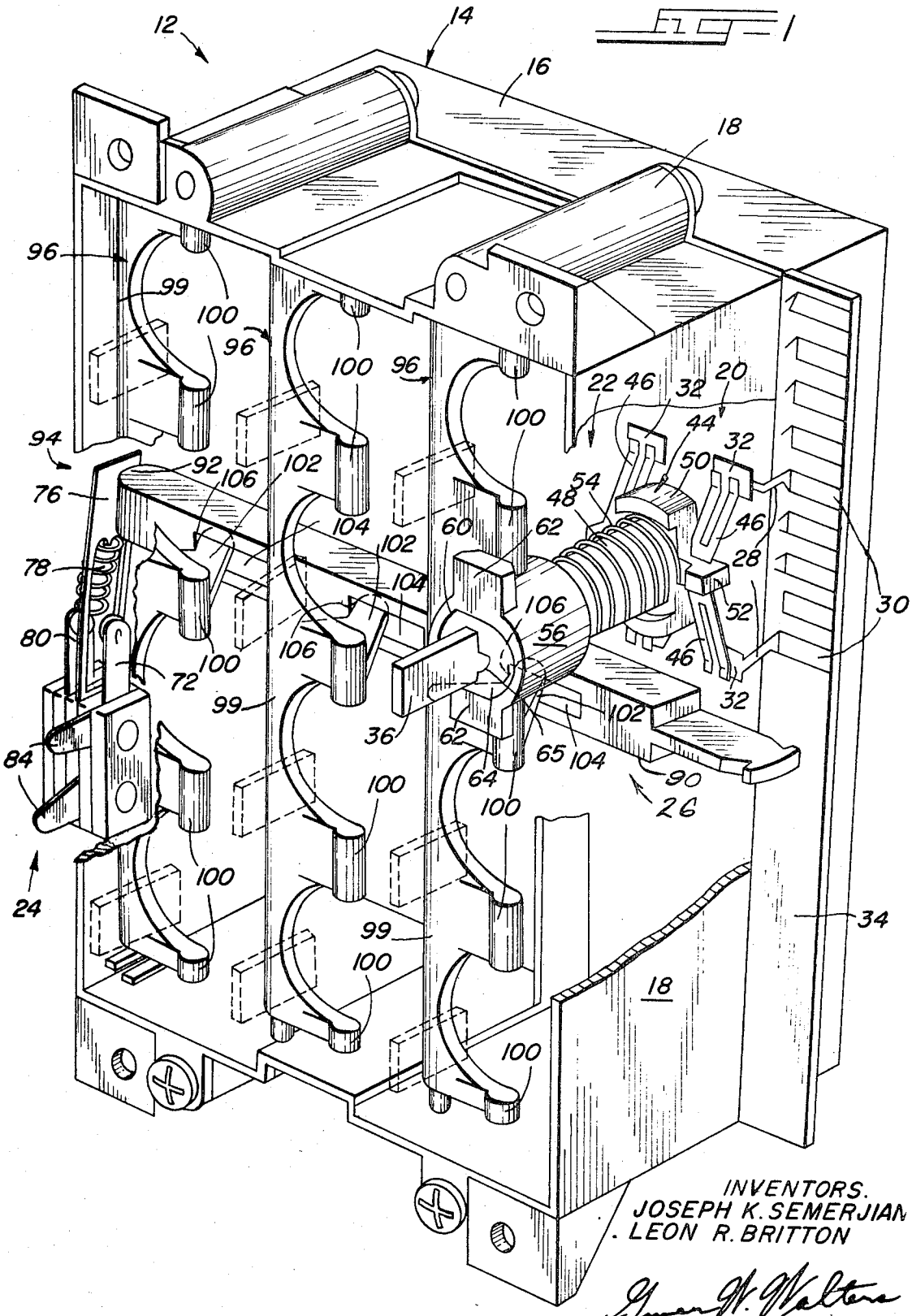

INVENTORS.
JOSEPH K. SEMERJIAN
LEON R. BRITTON

BY Attys

PATENTED DEC 19 1972

3,706,863

SHEET 2 OF 2

FIG-2

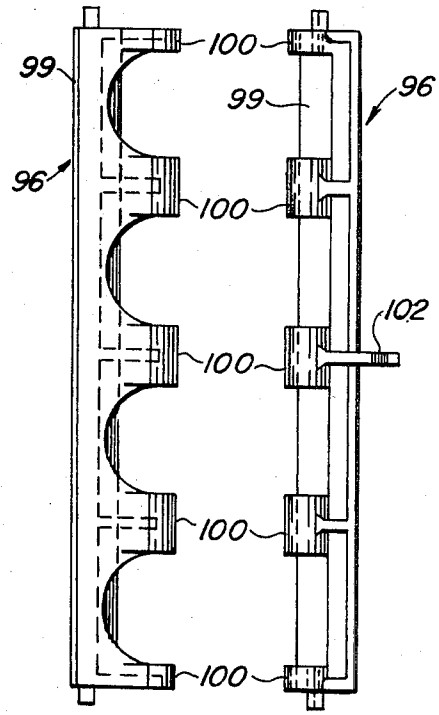

FIG-3

FIG-5

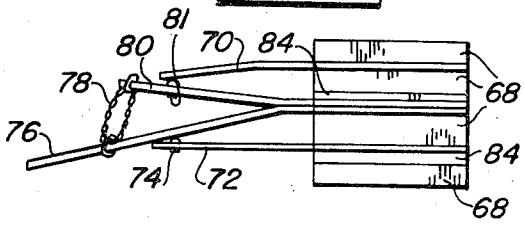

FIG-4

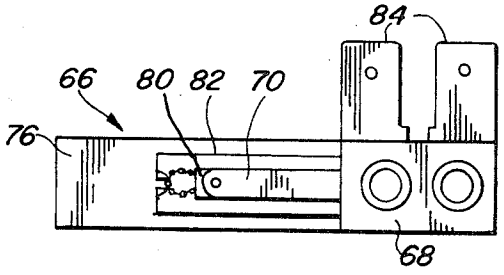

FIG-6

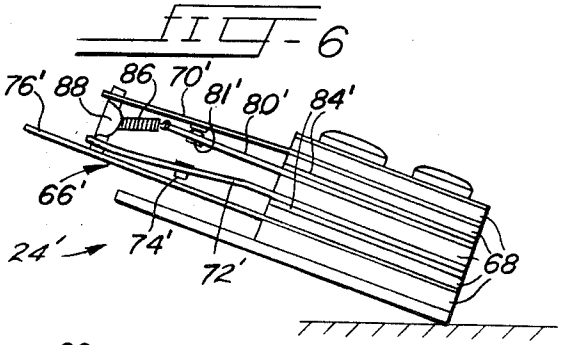

FIG-7

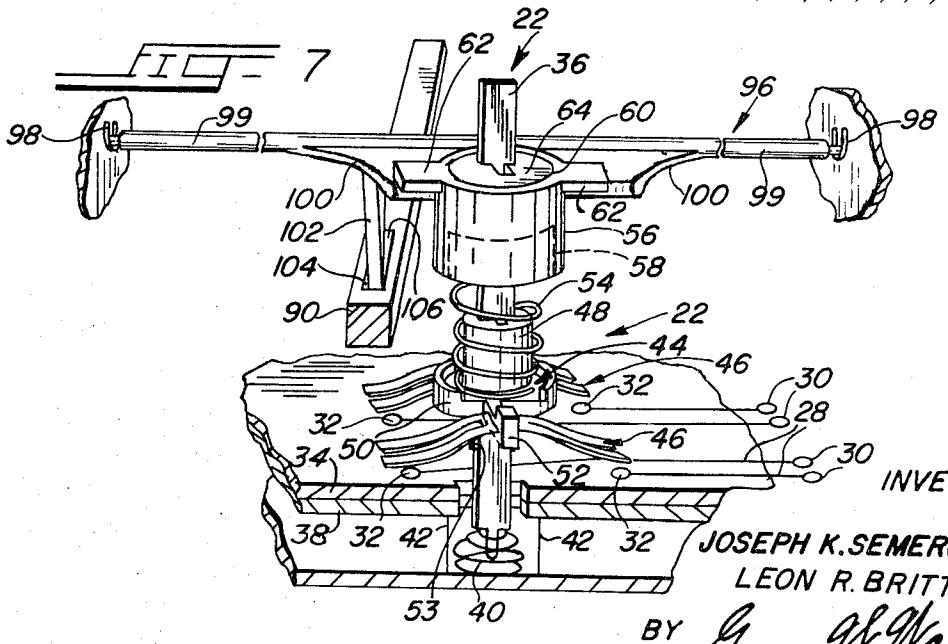

INVENTORS
JOSEPH K. SEMERJIAN
LEON R. BRITTON
BY Gomer W. Walters
ATTY

MULTIPLE SWITCH ASSEMBLY FOR VENDING MACHINE SELECTING APPARATUS WITH IMPROVED MASTER SWITCH CONTROL

BACKGROUND OF THE INVENTION

1. Field of the Invention

This invention relates generally to a selecting apparatus for vending machines, and more particularly this invention relates to a switching arrangement utilized in a phonograph selecting apparatus.

2. Description of the Prior Art

In many applications, such as coin-operated vending machines (e.g., coin-operated phonographs), selecting apparatus are employed in order to permit an operator to choose any one of a number of selections simply by pressing one or more selector buttons. The depression of a selector button initiates an input signal, which in turn triggers some desired machine function.

One of the deficiencies of the selecting devices of the prior art is that switches providing a reasonable number of alternative selections are often quite cumbersome and complex. Consequently, such units have a high initial cost and are difficult and expensive to service. Moreover, they take up considerable space in the system in which they are employed. When this vending machine system is a coin-operated phonograph or the like, where space and design considerations are very important, the size and complexity of the prior art selection systems has been found to be very undesirable.

Another drawback with the selecting devices of the prior art is especially important when the selecting devices are employed in a system using a logic circuitry selecting mechanism. In such a system, the signals generated by the selecting devices are impulse signals that are received by the logic circuitry of the selection sensing mechanism of the apparatus. Such selecting systems provide a large number of selections and utilize little space, but the impulse signals are of such a nature that they are easily and often duplicated extraneously in the system (as by starting the apparatus or by an electrical malfunction or through some external force, such as jostling the machine), without the depression of an appropriate signal button, so that the machine is placed into operation when no selection has been made. This, of course, results in a direct economic loss to the owner of the machine in case of coin-operated phonographs and the like, not to mention the inconvenience and aggravation in having such a system commence operation on its own at various times. The prior art selecting devices provide no means for insuring that genuine selections are the only signals transmitted from the selecting apparatus to the sensing mechanism of a vending machine, so that logic circuitry sensing mechanisms have heretofore been plagued with the problem of undesired vends occuring through extraneous circuit signals.

Another deficiency in the prior art selector switches is that the selector input switches have not been entirely satisfactory. Dirt and grease eventually build up on any switch contacts, thereby impairing the operation of the switch, and no inherent means are provided in the switches of the prior art to remove this dust and grease without disassembly of the switch apparatus.

Still another disadvantage of prior art selecting devices is that if the selector switches are utilized to directly open and close current-carrying circuits, the switches have to have a high power capability. In addition, making and breaking current-carrying circuits shortens the life and causes contact problems for even heavy duty switches.

Still a further disadvantage of prior art switching arrangements involves the ever-present vending machine problem of "cheating". Since most switching arrangements previously utilized have electrically energized circuits containing the selector switches, unearned vends can frequently be obtained by tampering with the circuits. Also, it is frequently possible to obtain multiple selections by getting more than one choice registered during the time that a credit control permits the registering of a choice.

In order to obviate the above-discussed deficiencies in the prior art selector switch systems, the present invention was evolved.

SUMMARY OF THE INVENTION

In accordance with the present invention, an improved selecting apparatus for vending machines and the like comprises a plurality of selector input switches that are individually actuatable by means of depressable plungers and a master switch that controls the energization of circuits containing the selector input switches. The master switch is actuated by means of a master switch actuator comprising a thrust lever and cam apparatus that interacts with the plungers, such that the depression of any plunger first actuates its respective selector input switch and then actuates the master switch, thereby completing the energization of the circuit.

A selecting apparatus constructed in accordance with the present invention obviates all of the deficiencies of the prior art switching devices discussed above. FIrst, the apparatus of the present invention is small, simple, and inexpensive (the whole assembly being only slightly larger than a pack of cigarettes), yet it can be adapted to provide up to one thousand separate selections with only ten selector switches when employed in a vending machine using a logic circuitry selection system of the type disclosed in a co-pending United States patent application of Thomas P. Jachinek and Thomas A. Murrell entitled "Selecting Apparatus and Method for Phonograph," U.S. Pat. application, Ser. No. 862,624, filed Sept. 11, 1969, and assigned to the same assignees as the present application.

The master switch feature of the present invention makes the subject selecting apparatus particularly well adapted for use in such logic circuitry selection systems, because the master switch obviates one of the most serious problems with such systems, namely, the problem of extraneous circuit signals producing undesired vends.

In such a system, extraneous signals are eliminated by providing an AND gate at the input to the selection sensing mechanism, with one input of the AND gate being connected to the selector input switch circuit and the other input being connected to a separate master switch circuit. When a plunger is depressed and the master switch and a selector input switch are actuated, separate input signals are generated in each circuit and both signals appear at the inputs to the AND gate simultaneously, so that the AND gate transmits an appropriate signal to the selection sensing mechanism.

However, when an extraneous signal arises in either the input switch or master switch circuit, that signal appears at only one of the inputs of the AND gate, so no signal is transmitted to the selection system. Only in the rare situation when two extraneous signals appear simultaneously in the input switch and master switch circuits will an improper signal be transmitted to the selection system, and it has been found in practice that such duplicate signals almost never arise extraneously and are difficult to impossible to induce by cheating.

Another advantage of the present invention is that the master switch feature virtually eliminates arcing between the contact points of the selector input switches when the switches are opened and closed, and this prolongs contact life substantially. In addition to providing a means for supplying an independent signal at an AND gate, the master switch also controls the energization of the circuits containing the selector input switches, so that no current may flow through an input switch until the master switch has been actuated. Since the actuating mechanism of the selecting apparatus is set up to actuate the master switch after actuation of the input switches (and, conversely, deactuate the master switch before deactuation of the input switches), the input switch circuits are always dead when the input switch contact points are opening and closing, thus eliminating the arcing that is characteristic in such switches in active circuits. This feature is especially important when printed circuitry is used in the selecting apparatus, because the contacts in printed circuits are necessarily thin and deteriorate rapidly when subjected to any appreciable amount of arcing.

Still another advantage of the present selecting apparatus is that the construction of the selector input switch actuators provides an automatic means for cleaning the input switch contact points without requiring the disassembly of the apparatus. Each input switch actuator comprises a longitudinal stem and a contact holder slidably mounted at one end of the stem. The contact holder is urged toward that end by a spring member that rides on a collar fastened to the stem at the other end (the spring mounted contact holder serving to permit the actuation of the input switch before the actuation of the master switch). Bridging contacts in the form of bow-shaped conductors are mounted on each contact holder, and these contacts are positioned to engage stationary contacts in the input switch circuitry when the stem is depressed.

By forming these contacts of a resilient conductor and by bending this conductor downwardly on each end toward the stationary contacts, the self-cleaning feature of the invention is achieved. As the stem is gradually depressed, the outward ends of the conductor first engage the stationary contacts, and then, as the stem is further depressed, the conductor yields resiliently upwardly. This movement forces the outward ends of the conductor to slide outwardly on the stationary contacts, thus wiping dirt and grease from the surfaces of these contacts, thereby insuring sound electrical contact between the bridging contacts and stationary contacts.

Accordingly, it is one of the objects of the present invention to provide a selecting apparatus for vending machines and the like that is compact, simple, and economical, yet provides a wide range of individual selections.

It is another object of the invention to provide a selecting apparatus that is well-suited for use in vending machines employing logic circuitry selection systems.

It is a further object of the present invention to provide a selecting apparatus for a logic circuitry selection system that eliminates undesired vends through extraneous circuit signals or through cheating.

It is still another object of the present invention to provide a selecting apparatus wherein arcing between the contact points of the selector input switches is eliminated.

It is yet another object of the present invention to provide a selecting apparatus having a plurality of selector input switches and also having a master switch that is actuated by the actuation of any selector input switch after the input switch has been actuated.

It is a further object of the present invention to provide a selecting apparatus with self-cleaning contacts.

These and other objects, advantages and features of the present invention will hereinafter appear, and for purposes of illustration, but not of limitation, preferred embodiments of the subject invention are described below and illustrated in the appended drawings.

BRIEF DESCRIPTION OF THE DRAWINGS

FIG. 1 is a perspective view of a selector switch of the present invention with the top removed and partially broken away.

FIG. 2 is a top plan view of a treadle bar of the present invention.

FIG. 3 is a right-side view of the treadle bar shown in FIG. 2.

FIG. 4 is a top plan view of a master switch of the present invention.

FIG. 5 is a side view of the master switch shown in FIG. 4.

FIG. 6 is a side view of a second embodiment of a master switch.

FIG. 7 is a schematic perspective view, partially in section, showing how each input actuator assembly interacts with the treadle bar and thrust lever in order to actuate the master switch.

DETAILED DESCRIPTION OF THE PREFERRED EMBODIMENTS

Referring now to the drawings, and more particularly to FIG. 1, a selecting apparatus **12** constructed in accordance with the present invention is shown therein. The selecting apparatus comprises a switch box **14**, which includes a base **16**, a middle section **18**, and a top (not shown). The switching mechanism of the selector switch includes a plurality of selector input switches **20** and individual input actuators or plungers **22** (only one of which is shown in FIG. 1 for purposes of clarity), a master switch **24**, and a master actuator **26**.

As shown in FIG. 1, the selector input switches **20** of the present invention are of the single pole, single throw variety, with each switch comprising a pair of electrically isolated conductors **28** having output terminals **30** and input terminals in the form of stationary contacts **32**. The input terminals of the switches are mounted on a fixed surface, such as a circuit board **34**, directly beneath the respective input actuators and serve as the stationary contacts of the switches. These

switches may utilize copper conductors and soldered contact points, or, preferably, printed circuits may be imprinted on the circuit board **34**. Printed circuitry is preferred because it is inexpensive and requires less space than conventional circuitry.

Although the present selecting apparatus could employ any one of a variety of switching circuits, the preferred embodiment of the present invention utilizes switching circuitry that finds particular advantages in applications employing logic circuit selection mechanisms. In a co-pending U.S. patent application of Thomas P. Jachinek and Thomas A. Murrell entitled "-Selecting Apparatus and Method for Phonograph," U.S. Patent application, Ser. No. 862,624, filed on Sept. 11, 1969 and assigned to the same assignee as this application, such circuitry is described, and this circuitry enables the present selecting apparatus to be used in a coin-operated phonograph operation such that, wit twelve selector input switches in the selector system, **1,000** separate selections are possible, using ten of the twelve switches for input selections and using the other two buttons as reset buttons. Although the logic circuitry described in the above-mentioned co-pending application does not form a part of the present invention, the master switch feature and the compact arrangement of the present selector switch and the ready adaptation of the switch to compact printed circuitry arrangements makes the present selector switch particularly advantageous in coin-operated phonographs and the like employing such selection systems.

One of the input actuators or plungers **22** employed in the present invention in order to actuate the individual selector input switches is shown in detail in FIG. 7. Each plunger comprises a flat metal stem **36**, which is slidably mounted for longitudinal motion within the switch box in a direction perpendicular to the circuit board **34**. The bottom end of the stem (FIG. 7 orientation) protrudes through a hole in the circuit board and another hole in a backing plate **38** of base **16** and rests on a spring **40** which is maintained in direct alignment with the stem by means of sidewalls **42** within base **16**. Spring **40** provides resilient support for the stem **36** and maintains the plunger in a normally deactuated position. The top of the stem protrudes out of the switch box through a rectangular opening in the top thereof, thus presenting an external plunger that may be depressed by an operator in order to actuate an input signal. Within the switch box, a contact holder **44** is slidably mounted over the stem **36** and rests upon stops **53** located at the lower portion of the stem, such that bridging contacts **46** mounted thereon will normally occupy a position just above the input terminals of the input switches.

The contact holder is constructed from an electrically non-conductive material, such as plastic, and comprises a cylindrical upper portion **48** and a circular base **50**, with the diameter of the upper portion being relatively smaller than the diameter of the base. Small protrusions **52** extend radially outwardly from the base **50** on opposite sides thereof to hold the contacts **46** in position.

Bridging contacts **46** comprise resilient, bow-shaped conductors, which are mounted to the contact holder by means of protrusions **52** at a point in between the ends of the conductors. The outward ends of each conductor are bent downwardly (FIG. 7 orientation) toward the fixed surface and are positioned so that the ends extend below the bottom of the contact holder. In the preferred embodiment of the present invention, the legs of the bow-shaped conductors are split into two segments in order to obtain proper resiliency and optimize the electrical contact between the input terminals and the contacts. It would, of course, be feasible to use a solid conductor instead of the split conductors employed herein. Further, the embodiment shown in FIGS. 1 and 7 employs two sets of bridging contacts, one on each side of the contact holder. The double contacts are used when the selector switch is employed in connection with the logic circuitry described in the above-mentioned co-pending patent application and are not necessary when the selector system is performing a simple on-off function.

The operation of the bridging contacts and the specific advantages gained therefrom may be described briefly as follows. As the plunger is gradually depressed downwardly, the outward ends of each conductor first engage the stationary contacts of the input switch and then the conductor begins to yield and bend upwardly. This forces the contacts to slide outwardly on the stationary contacts, and this action wipes dirt and grease from the contacts, thereby insuring a good electrical contact between the contacts. After the conductor yields a fixed distance, the bottom of the contact holder engages the fixed surface and prevents further deformation of the conductor.

Describing further the nature of the input actuator **22**, a compression spring **54** surrounds the stem and rests on the base **50** of the contact holder **44** and protrudes upwardly therefrom. At the upper end of the spring is a collar **56**, which is slidably mounted on stem **36** through a rectangular opening therein, which is slightly larger than the cross-sectional area of the stem. In the preferred embodiment, this collar comprises a plastic cylinder having a cylindrical opening **58** in the bottom thereof. The interior diameter of the opening **58** is larger than the diameter of either the compression spring **54** or the upper portion **48** at the contact holder, so that the spring and the contact holder may slide into the opening. The top of the collar has two flanges **62** extending radially therefrom on opposite sides of the collar. The top also has a non-circular recess **60** therein surrounding the stem that is substantially large than the cross-sectional area of the stem.

A latching disc **64** fits on the stem through an opening **65** in the disc. The outer perimeter of the disc is adapted to mate with and fit snugly into the opening **60** in the collar. The disc performs a latching function by means of the shape of the opening in the center of the disc. This opening is non-circular in nature and has a length in a first direction sufficiently long to permit the disc to be slipped over the stem. The width of the opening in the disc, however, is narrower than the width of the stem, so that the disc may not be rotated about the wide part of the stem. The stem, however, is provided with a notch therein opposite the top of the collar, and this notch has a width slightly less than the narrow measurement of the hole in the disc, such that the disc may be rotated about the stem within the notch. In the preferred embodiment the opening takes the form of two rectangular openings that overlap at one corner of

each opening. The opening in the disc is aligned with respect to the outer perimeter of the disc such that when the disc is slipped over the stem, moved down to the notch in the stem, and turned 90° in the notch, the disc is in position to fit into the non-circular opening **60** in the collar. With the disc fitting snugly into the collar, the disc can not rotate or move either up or down with the stem, thus locking the collar on the stem.

By structuring the input actuator so that the contact holder **44** is slidably mounted on the stem and is urged downwardly against the stops on the stem only by the force exerted by compression spring **54**, two important advantages of the present invention are achieved. As a stem is gradually depressed, the bridging contacts engage the stationary contacts of the input switch and then yield upwardly to perform the above-described wiping function. After the contacts yield a fixed distance, however, the bottom of the contact holder engages the circuit board and prevents the contacts from continuing to bend upwards. If the plunger is depressed still further, no additional pressure is applied to the contacts or to the circuit board; rather, the stem merely continues to move through the opening in the circuit board into the base, while the contact holder slides up the stem, compressing spring **54**. Thus, the plunger may be depressed fully each time an input switch is actuated, and there will never be any damaging impact between the input actuator and the input circuitry, such as would result if the actuator were permitted to "bottom out" on the circuit board. This feature, therefore, prolongs the life of the input switch and the actuator and protects the switch assembly from damage that might otherwise result from a vigorous actuation of the selector switch.

Another advantage of the present input actuator is that the actuator may be employed to perform a sequential switching function of two separate switches (i.e., the selector input switches and the master switch) and thereby eliminate arcing between the contact points of the input switches. In the operation of the present invention, the depression of a plunger first actuates its respective selector input switch, and then, on further depression of the plunger, the contact holder slides up the stem and the plunger proceeds to actuate the master switch. Likewise, when the plunger is released, the master switch is first deactuated and then the selector input switch is deactuated. Thus, the master switch is always open when the contact points of the selector input switch are opening and closing. When, as in the preferred embodiment, the master switch controls the energization of the input switch circuits, the input switch circuits will always be dead when the contact points are opening and closing, because the master switch is always open at those times. Since contact arcing is a phenomenon that occurs only when points are opening or closing in an active circuit, this feature eliminates arcing between the contact points and thereby prolongs contact life. When the preferred printed circuitry is employed in the input switches, this advantage is especially important, because printed contact points are quite light and have a short life when subjected to an appreciable amount of arcing.

A first embodiment of a master switch employed in the present invention is shown in FIGS. **4** and **5**. This switch comprises a plurality of metallic blades **66** separated by separators **68** formed of a non-conductive material, such as bakelite. In the preferred embodiment of the subject invention, bakelite separators one-sixteenth of an inch thick are employed.

The uppermost blade of the master switch (FIG. **5** orientation) comprises a spring member **70**. This spring may be constructed of any resilient, conductive material, but in the preferred embodiment of the present invention a tempered bronze blade 0.020 inches in thickness is employed. The lowermost blade in the master switch (FIG. **5** orientation) is a stationary blade **72**. In the preferred embodiment, this blade is formed of a tempered bronze spring 0.020 inches in thickness and is provided with a silver palladium contact point **74** at the left end thereof. The longer of the two remaining blades is a shifter blade **76**. This blade is connected by a barrel spring **78** (alternatively, a U-shaped roll-over spring may be employed) to a moving blade **80**, which is also provided with a silver palladium contact point **81** positioned opposite contact point **74** in the stationary blade. The shifter blade is also provided with an opening therein, such that the moving blade may pass through the shifter blade without coming in contact therewith. The master switch is also provided with two output terminals **84**, one of which is attached to the stationary blade **72** and the other of which is attached to the moving blade **80**.

The operation of the master switch may be described as follows. In the position shown in FIG. **5**, the contact points are separated, so that the master switch represents an open circuit. The switch may be closed by moving the shifter blade in an upward direction (FIG. **5** orientation). This causes the barrel spring to compress and bends the moving blade **80** and the spring member **70** in an upward direction. When the shifter blade moves upward further and approaches alignment with the moving blade, the spring member **70** and the inherent resiliency in the moving blade eventually overcome the upward force exerted by the barrel spring and force the moving blade to snap downward through the opening in the shifter blade. After the moving blade has passed downwardly through the shifter blade, the direction of force of the barrel spring is reversed, and the barrel spring forces the moving blade downward, thereby causing the contact points **74** and **81** to snap together quickly, with a minimum of arcing between the contact points. To disengage the switch, the opposite procedure is followed.

An alternative master switch **24'**, equally effective in the present invention, is shown in FIG. **6**. This master switch also includes four blades **66'** which are separated by non-conductive separators **68'**. The upper blade again is a spring member **70'**, but the positions of the other three blades has been altered somewhat. The shifter blade **76'** in the second embodiment is the lowest blade in the stack (FIG. **6** orientation), and the two middle blades are provided with electrical contacts. By putting the two electrically conducting blades in the center, the need for an opening in the shifter blade is eliminated. The uppermost of the middle blades is a moving blade **80'** and is provided with a silver palladium contact **81'** of the type used in the first embodiment. The lower contact blade **72'** of the two middle blades is also provided with a silver palladium contact **74'**, which is positioned opposite the contact

point on the moving plate. The output terminals in this second embodiment are attached to each of the two middle blades of the master switch. The spring force provided for snapping the contact points together when the switch is actuated is supplied by a compression spring **86**, which is attached at one end to the moving blade **80'** and at the other end to a non-conductive spacer **88**. One end of the spacer is attached to the shifter blade **76'**, and the other end of the spacer is attached to the spring member **70'**, with the compression spring **86** being attached to the spacer at a point between the two ends. The outer end of the lower contact blade **72'** also is attached to the spacer, at a point adjacent the shifter blade.

The operation of this second embodiment of the master switch is similar to the operation of the first embodiment of the switch but provides one principal advantage over the first embodiment, namely, the contact points do not have to pass through the shifter blade in order to effect engagement between the moving and stationary blades. In the second embodiment, when the shifter blade is in its deactuated position, the compression spring forces the moving blade in an upward direction, away from the lower contact blade **72'**. When the shifter blade is actuated and moved in an upward direction, the spring at first forces the moving blade upward, but when the end of the compression spring attached to the spacer moves past the end attached to the moving blade, the compression spring forces the moving blade to snap downward and effect engagement between the contact points of the moving blade and the lower contact blade. As before, when the shifter blade is moved back to its original position, the contact points are again separated and the master switch again becomes an open circuit.

The master actuator **26** comprises apparatus in the switch box that is designed to actuate the master switch in response to the actuation of any one of a plurality of input switches. The master actuator **26** comprises a thrust lever **90** slidably mounted for longitudinal motion within the switch box. The thrust lever **90** has an outward end **92** that is adapted to move through an opening **94** in the side of the switch box when the thrust lever is actuated. The master switch **24** is mounted on the outside of the middle section of the switch box in such a position that the end of the shifter blade covers the opening **94** in the switch box (as shown in FIG. **1**). Thus, when the thrust lever is actuated and slides through the opening out of the switch box, the end of the thrust lever **92** engages the shifter blade and thereby effects the actuation of the master switch.

The thrust lever is actuated in response to the actuation (i.e., depression) of any one of the individual selector input switch actuators by means of cam means in the form of treadle bars **96**, each of which are rotatably mounted in U-shaped supports **98** on the inside of the middle section **18** of the switch box. Each treadle bar, as shown in FIGS. **2** and **3**, comprises a pivotable transverse rod **99** having a series of input cams **100** extending horizontally therefrom (FIG. **7** orientation) into engagement with the flanges extending from the collars on the input actuators. A thrust cam **102** protrudes downwardly from the treadle bar into an opening **104** in the thrust lever **90**.

The interaction between the input actuators and the thrust lever may be described briefly as follows. When any one of the input actuators is depressed, such as the one shown in FIG. **1**, the flanges resting on cams **100** displace the cams and cause the treadle bar **96** to rotate. This causes the thrust cam on the bottom of the treadle bar to move within the opening in the thrust lever and engage a cam surface **106** on the end of the opening. This in turn forces the thrust lever to slide out through the opening in the side of the switch box and actuate the master switch **24**. Thus, when any one of the input actuators is depressed (the preferred embodiment provides positions for **12** such input actuators) both the master switch and the input switch associated with that particular input actuator are actuated.

As stated previously, one of the advantages of the master switch feature is that arcing between the contact points of the selector input switches may be eliminated by placing the master switch in the circuit controlling the energization of the selector input switches and by constructing the actuation mechanism so that the general depression of each plunger sequentially actuates first its respective selector input switch and then the master switch. This sequential operation may be effected by positioning the stationary contacts at a position such that they will engage the bridging contacts upon partial depression of the plunger and by designing the master switch actuator assembly to actuate the master switch only when the plunger is depressed past the point where the bridging contacts engage the stationary contacts.

Another advantage achieved by the master switch feature of the present invention is that signals arising from some source other than the actuation of a selector input switch i.e., either extraneously or through an attempt to cheat the machine) may be eliminated from the circuit. When the selecting apparatus of the present invention is used in a vending machine having a logic circuitry selection mechanism (where extraneous signals often duplicate the signals generated by the selecting apparatus), such extraneous signals are eliminated by establishing separate circuits for the input switches and the master switch and by connecting these circuits to the selection sensing mechanism through the two inputs of an AND gate. Thus, when a selection is made, separate signals are generated in an input switch circuit and the master switch circuit simultaneously, and these signals appear at the inputs to the AND gate at the same time, thereby causing the AND gate to transmit a signal to the selection sensing mechanism. But, when an extraneous signal or a signal generated by cheating arises in either circuit, the signal will not be transmitted to the selection sensing mechanism by the AND gate, because of the absence of a corresponding signal at the outer input to the AND gate. Because it is extremely unlikely that two separate extraneous signals would appear in both circuits at the same time and because it would be difficult to impossible to generate such signals by cheating, the master switch utilized in this manner virtually eliminates the problem of undesired vends that would otherwise be present in a machine employing a logic circuitry selection mechanism.

It should be understood that the embodiments described herein are merely exemplary of the preferred

practices of the present invention and that various changes, modifications, and variations may be made in the arrangements, operations, and details of construction of the elements disclosed herein without departing from the spirit and scope of the present invention, as described in the appended claims.

We claim:

1. Vending machine selecting apparatus comprising:
a plurality of selector input switches, each of said input switches representing a vend selection identifying character;
a master switch controlling energization of circuits containing said selector input switches;
master switch actuating means adapted to actuate the master switch after and in response to the actuation of any input switch; and
selector input switch actuating means for each of said selector input switches, each of said input switch actuating means being adapted to first actuate its respective selector input switch and then to activate the master switch actuating means after actuation of its respective selector input switch,
whereby the circuit containing a selector input switch is not energized until after the associated selector input switch is actuated.

2. Selecting apparatus as claimed in claim 1 wherein:
said input switch actuating means each comprises a longitudinally reciprocable plunger having bridging contacts of the associated selector input switch thereon; and
each of said selector input switches further comprises a pair of stationary contacts mounted on a fixed surface and arranged to be electrically interconnected by said bridging contacts upon reciprocation of the associated plunger.

3. Selecting apparatus as claimed in claim 2 wherein each of said plungers comprises:
a stem;
a contact holder bearing said bridging contacts mounted on said stem and normally positioned adjacent one end of said stem, said contact holder being reciprocably movable along the portion of said stem away from said one end;
a collar located adjacent the other end of said stem; and
a spring positioned between said contact holder and said collar,
whereby said spring normally biases said contact holder to the position adjacent said one end of said stem but permits said contact holder to be displaced away from said one end when it engages said fixed surface.

4. Selecting apparatus as claimed in claim 3 wherein:
said stem is flat and generally rectangular and has stop means projecting from the stem adjacent said one end thereof and a notch formed in said stem adjacent said other end;
said stop means are adapted to limit the movement of said contact holder toward said one end; and
a latching member is fitted into said notch in order to prevent said collar from being forced off said other end.

5. Selecting apparatus as claimed in claim 3 wherein:
said stem is flat and generally rectangular with a pair of stop projections located adjacent said one end of said stem and a pair of notches formed in said stem adjacent said other end;
said stop projections are adapted to limit the movement of said contact holder toward said one end; and
a latching member is fitted into said notches to prevent said collar from being forced off said other end.

6. Selecting apparatus as claimed in claim 5 wherein:
said latching member comprises a generally oblong disc having an opening formed therein comprising two offset portions, the length of said opening where the portions overlap being slightly greater than the width of said stem, and the width of said opening where the portions overlap being slightly greater than the width of the section of said stem between said notches,
whereby said latching disc may be slid over said other end of said stem and then twisted in said notches to prevent said collar from being removed from said stem.

7. Selecting apparatus as claimed in claim 3 wherein:
said bridging contacts comprise a resilient, bow-shaped conductor fastened intermediate its ends to said contact holder, the outward ends of said conductor being bent toward the fixed surface and being positioned opposite said stationary contacts; and
said contact holder is positioned to engage the fixed surface shortly after said bridging contacts engage said stationary contacts when said plunger is reciprocated.

8. Selecting apparatus as claimed in claim 3 wherein:
said collar has a pair of flanges located thereon and extending in opposite directions therefrom; and
said master switch actuating means comprises a pivotable rod engaged by said flanges and having a thrust cam located thereon; and
said master switch actuating means further comprises a thrust lever engaging said master switch and actuated by said thrust cam.

9. A vending machine selecting apparatus as claimed in claim 1, wherein, upon deactuation of each selector input switch, its respective selector input switch actuating means is adapted to first deactivate the master switch actuating means and thereby deactuate the master switch before it deactuates its respective selector input switch, whereby no current is permitted to flow through any selector input switch at the time such switch is being actuated or deactuated.

10. A vending machine having a switch box and selecting apparatus comprising:
a plurality of depressable plungers projecting through a side of the switch box;
a plurality of selector input switches mounted in the switch box, each input switch being connected to an input circuit and being individually actuable by an associated one of said plungers;
a master switch mounted on the switch box, said master switch being connected to each of the input circuits so as to control the actuation of each input circuit;
a thrust lever slidably mounted in the switch box and adapted to actuate said master switch; and

interacting means in the switch box adapted to actuate said thrust lever and thereby actuate said master switch in response to the depression of any plunger for any selector input switch, said interacting means being adapted to actuate the master switch after actuation of the selector input switch.

11. Selecting apparatus as claimed in claim 10 wherein said input switches are positioned in rows and said interacting means comprise:

a plurality of treadle bars, one treadle bar positioned adjacent each row of input switches;

a flange associated with each of said plungers;

cam means extending from each treadle bar, each of said cam mean adapted to engage said flanges of all of said plungers associated with said input switches in one of the rows of said input switches, such that depression of any plunger associated with an input switch in that row will cause said cam means to pivot the corresponding treadle bar; and

thrust cam means extending from each of said treadle bars, said thrust cam means being adapted to activate said thrust lever by engaging a cam surface on said thrust lever whenever the associated treadle bar is pivoted by depression of one of said plungers.

12. Selecting apparatus as claimed in claim 10 wherein:

bridging contacts of an associated input switch are mounted on each of said plungers;

each input switch further comprises stationary contacts mounted on a fixed surface and arranged to be electrically interconnected by said bridging contacts upon reciprocation of the associated plunger; and

each plunger comprises a stem, a contact holder reciprocably mounted on the stem and bearing said bridging contacts, a collar located adjacent the other end of said stem, and a spring positioned between said contact holder and said collar,

whereby said spring normally biases said contact holder to a position adjacent said one end of said stem but permits said contact holder to be displaced away from said one end when it engages said fixed surface.

13. Switching apparatus comprising:

a longitudinally reciprocable stem;

a contact holder slidably mounted on said stem and normally positioned at one end of said stem, said contact holder being reciprocably movable along the portion of said stem away from said one end;

stop means on the stem to prevent the contact holder from sliding off said one end of the stem;

bridging contacts mounted on said contact holder;

a pair of stationary contacts mounted on a fixed surface adjacent said one end of said stem and arranged to be electrically interconnected by said bridging contacts upon reciprocation of said stem;

a collar fixed to the stem adjacent the other end of said stem; and

a spring positioned between said said contact holder and said collar,

whereby said spring normally biases said contact holder to the position adjacent said one end of said stem but permits said contact holder to be displaced away from said one end when said contact holder engages the fixed surface.

14. Switching apparatus as claimed in claim 13 wherein:

said stem is flat and generally rectangular and has a pair of notches formed in said stem adjacent said other end;

said stop means comprises a pair of stop projections located adjacent said one end of said stem, with said stop projections being adapted to limit the movement of said contact holder toward said one end; and

said collar comprises a latching member fitted into said notches to prevent said collar from being forced off said other end.

15. Switching apparatus as claimed in claim 14 wherein:

said latching member comprises a generally oblong disc having an opening formed therein comprising two offset portions, the length of said opening where the portions overlap being slightly greater than the width of said stem, and the width of said opening where the portions overlap being slightly greater than the width of the section of said stem between said notches,

whereby said latching disc may be slid over said other end of said stem and then twisted in said notches to prevent said collar from being removed from said stem.

16. Switching apparatus as claimed in claim 13 wherein:

said bridging contacts comprise a resilient, bow-shaped conductor fastened intermediate its ends to said contact holder, the outward ends of said conductor being bent toward the fixed surface and being positioned opposite said stationary contacts; and

said contact holder is positioned to engage the fixed surface shortly after said bridging contacts engage said stationary contacts when said plunger is reciprocated.

17. A vending machine selecting apparatus comprising:

a switch box having a top, a bottom, and four sides;

a circuit board mounted in said switch box parallel to said top, said circuit board comprising a plurality of pairs of contact points spaced a fixed distance apart, with each pair of contact points being electrically connected to a pair of electrical terminals on the outside of the switch box;

a plurality of flat, generally rectangular stems mounted in said switch box, each said stem slidably passing through an opening therefor in the top of said switch box in a direction perpendicular thereto and extending inwardly through an opening therefor in said circuit board and terminating in an inward end, each said stem being individually reciprocable within said switch box from a deactuated position, wherein the end of said stem outside said switch box is in a raised position, to an actuated position, wherein the end of the stem outside said switch box is in a depressed position;

a spring mounted behind each of said openings in said circuit board so as to engage the inward end of the stem projecting therethrough and resiliently hold said stem in its deactuated position;

a contact holder slidably mounted on each said stem toward the inward end thereof;

a plurality of resilient, bow-shaped bridging contacts, one bridging contact corresponding to each pair of contacts in said circuit board, each said bridging contact being mounted on a contact holder at a point adjacent its corresponding pair of said contacts in said circuit board so as to engage said contacts when the stem associated with said contact holder and said bridging contacts is moved from its deactuated to its actuated position;

a pair of stop projections extending from each stem at a point adjacent the inward end of said stem so as to prevent the contact holder on said stem from sliding off the inward end of said stem;

a pair of notches formed in each stem, said notches being located adjacent the outward end thereof;

a collar slidably mounted on each stem toward the outward end thereof, each said collar having a pair of flanges extending radially from opposite sides thereof;

an oblong latching disc mounted on each stem, each disc having an opening formed therein comprising two offset portions, the length of said opening where the portions overlap being slightly greater than the width of the stem, and the width of said opening where the portions overlap being slightly greater than the width of the section of said stem between said notches, said disc being adapted to be slid over the outward end of said stem on the outside of the collar and twisted in said notches so as to prevent said collar from being removed from said stem;

a spring mounted on each stem between said collar and said contact holder, said spring being adapted to resiliently urge said contact holder toward the inward end of said stem and against said stop projections;

a master switch mounted on said switch box, said master switch having a deactuated and an actuated position;

a thrust lever mounted in said switch box so as to be engageable with said master switch, said thrust lever having a deactuated position, wherein the master switch is maintained in its deactuated position, and an actuated position, wherein the master switch is maintained in its actuated position;

at least one pivotable rod mounted in said switch box transversely to said thrust lever, said pivotable rod comprising cams that extend therefrom into engagement with said flanges on said collars so that said pivotable rod pivots whenever any stem is depressed, said pivotable rod further comprising a thrust cam that extends therefrom into engagement with the thrust lever, said thrust cam being formed so as to move the thrust lever to its actuated position whenever any stem is depressed, but only after any bridging contacts associated with said stem have engaged their corresponding contacts in said circuit board,

whereby the gradual depression of any stem first causes the bridging contacts to engage the corresponding contacts in the circuit board, and then causes the pivotable rod to move the thrust lever to its actuated position, thereby activating the master switch.

* * * * *