March 9, 1937. E. L. MELLINGER ET AL 2,073,115

TYPESETTING APPARATUS

Filed June 10, 1935 4 Sheets-Sheet 1

Fig. I

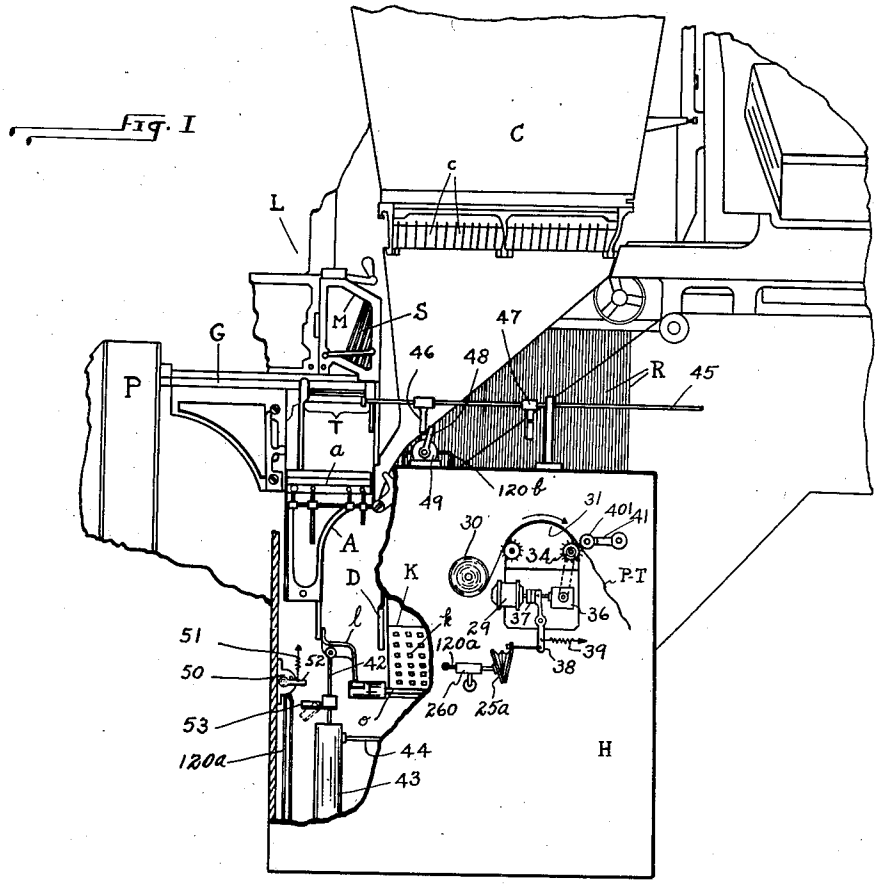

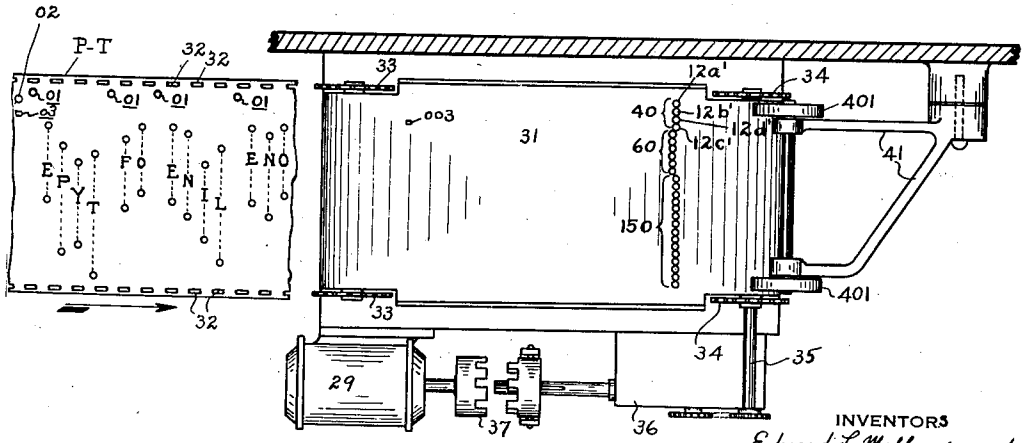

Fig. II

INVENTORS
Edward L. Mellinger, and
Orell R. Herwick
by Christy and Wharton
their attorneys

March 9, 1937. E. L. MELLINGER ET AL 2,073,115

TYPESETTING APPARATUS

Filed June 10, 1935 4 Sheets-Sheet 2

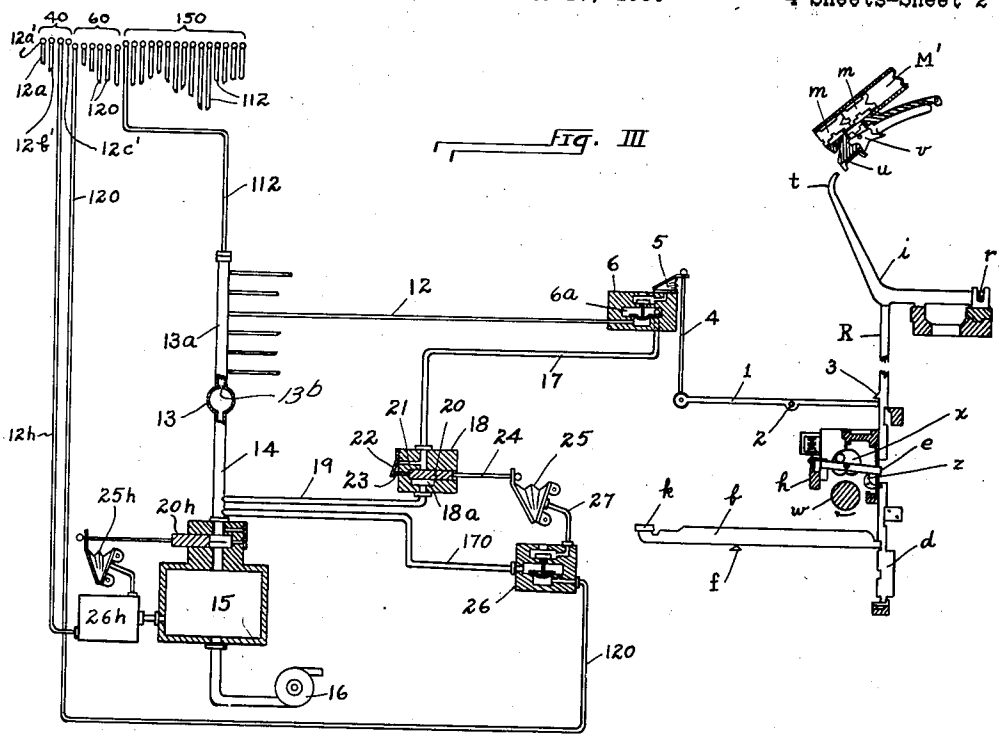

Fig. III

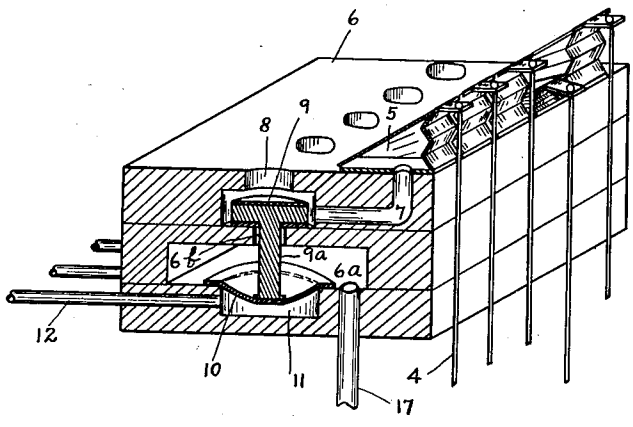

Fig. IV

INVENTORS
Edward L. Mellinger, and
Orell K. Herwick
by Christy and Wharton
their attorneys

March 9, 1937. E. L. MELLINGER ET AL 2,073,115

TYPESETTING APPARATUS

Filed June 10, 1935 4 Sheets-Sheet 3

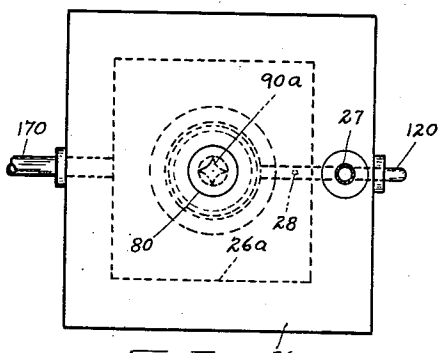

Fig. V

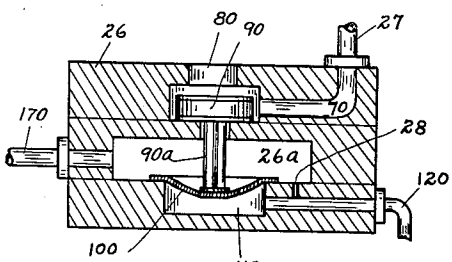

Fig. VI

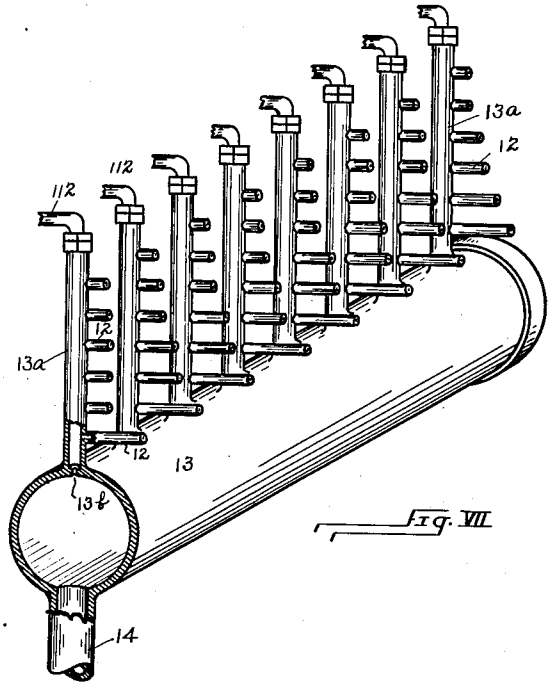

Fig. VII

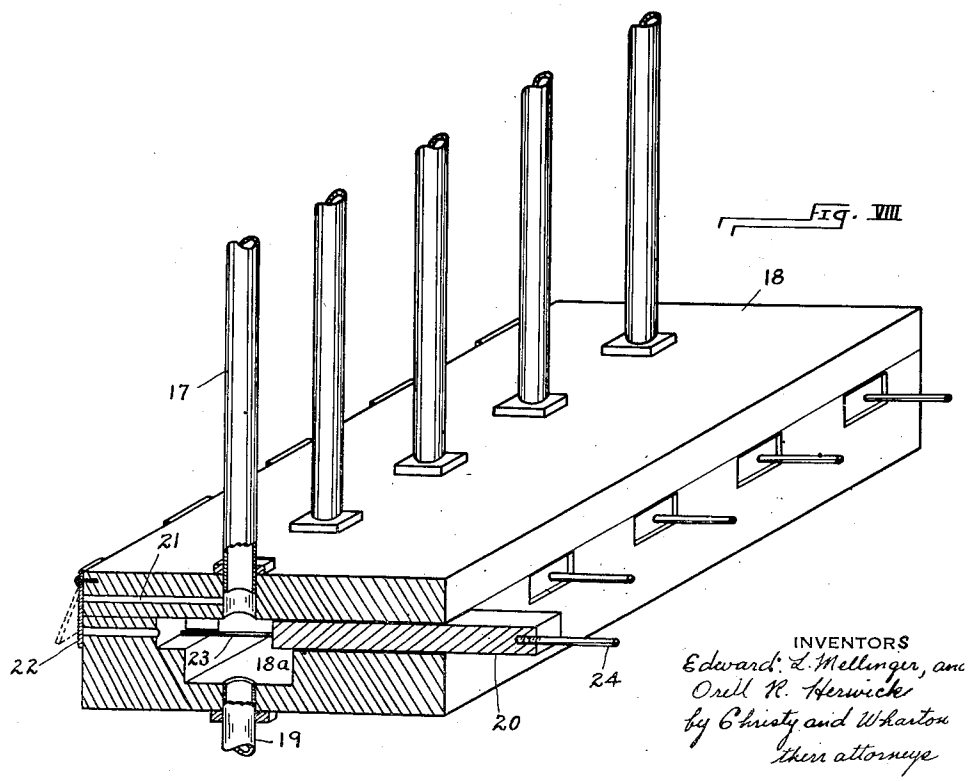

Fig. VIII

INVENTORS
Edward L. Mellinger, and
Orell R. Herwick
by Christy and Wharton
their attorneys

March 9, 1937. E. L. MELLINGER ET AL 2,073,115

TYPESETTING APPARATUS

Filed June 10, 1935 4 Sheets-Sheet 4

Fig. IX

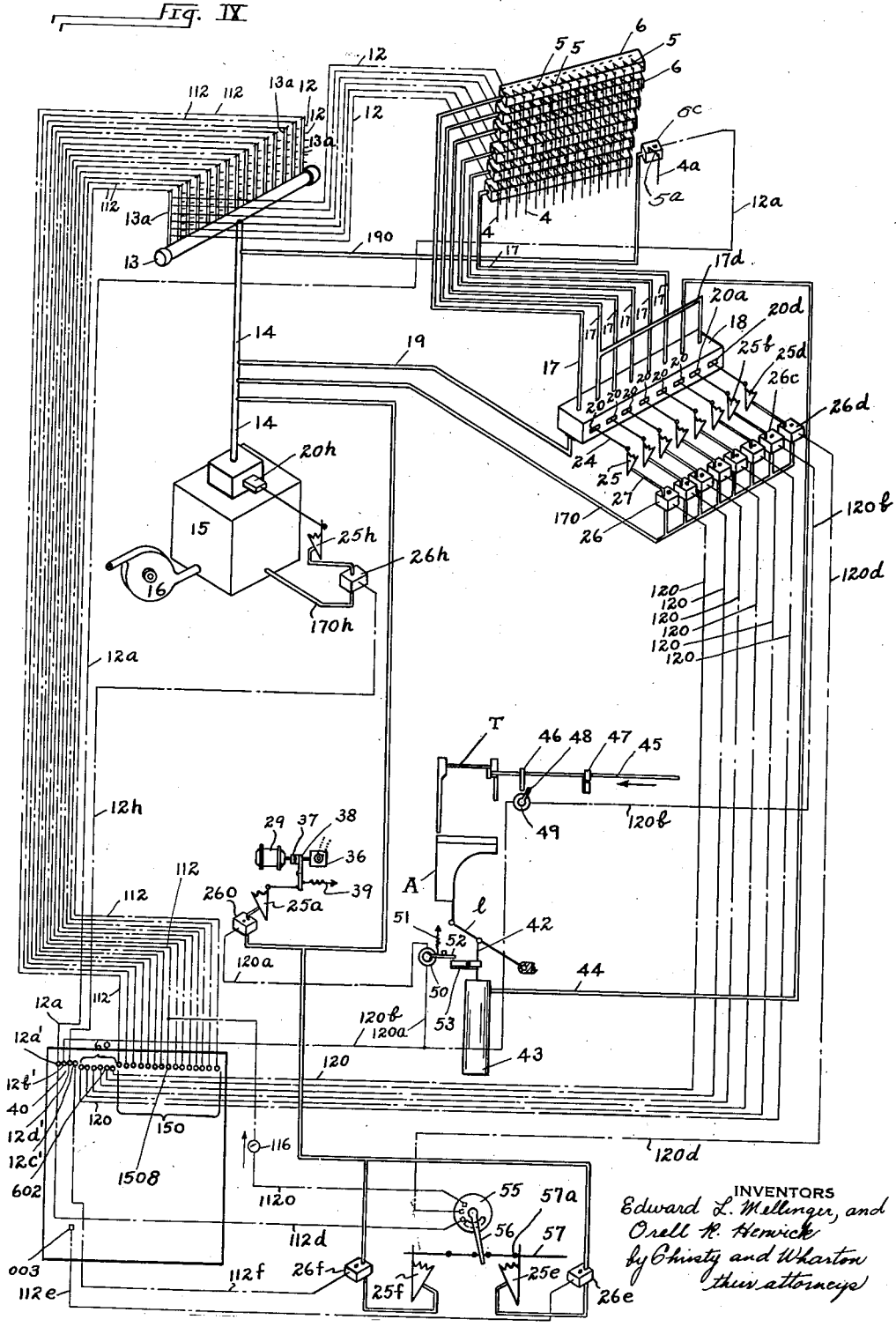

Patented Mar. 9, 1937 2,073,115

UNITED STATES PATENT OFFICE

2,073,115

TYPESETTING APPARATUS

Edward L. Mellinger, Dunbar Township, Fayette County, and Orrell R. Herwick, Connellsville, Pa.

Application June 10, 1935, Serial No. 25,700

24 Claims. (Cl. 199—18)

Our invention relates to type-setting and type-casting machines, and consists in pneumatic apparatus for effecting the automatic operation of such machines.

By way of illustration and not limitation, we shall describe the invention as it is embodied in or applied to a linotype machine—a form of type-casting machine well known to the printing art.

A linotype machine includes a key-board; the manual operation of the key-board effects (by means of the instrumentalities of the machine) the assembly of lines of type matrices in an assembler; when each line of type matrices is assembled, the assembler is manually shifted, and a so-called transfer carriage, embodied in the machine, automatically removes the matrices from the shifted assembler, and presents them to the molding or casting apparatus of the machine. A supply of molten "type" metal is maintained in the casting apparatus of the machine; the casting apparatus functions automatically in known way, to cast a line of type in the form of the aligned matrices presented thereto, and automatically delivers the type to a receiving pan. When the transfer carriage has removed the line of type matrices from the assembler, the assembler is restored to normal position. The operator then proceeds with the assembly of another line of matrices. It will be understood, therefore, that the usual operation of a linotype machine involves the manually selective pressing of keys, and the manual shifting of the assembler.

Our object is to provide pneumatic apparatus which is adapted to effect automatically these manual operations; that is, to effect the automatic shifting of the assembler in proper coordination with the automatic assembling of type matrices. We aim to obtain, through the use of pneumatic means, a cushioning of the positive operations of the automatic apparatus.

The type matrices of a linotype machine are stored in a magazine; the magazine usually includes ninety channels, and the different matrices are classified and stored in these channels. Each key of the key-board controls a reciprocable key-rod—a so-called reed—and each key-rod or reed controls the outlet of a channel that includes a store of matrices of one class. The outlets of the ninety channels are severally controlled by ninety reeds, which reeds in turn are severally controlled by ninety keys on the key-board of the machine. In normal operation of the machine, the manual pressing of a key is effective, through the instrumentality of mechanism continuously driven in known manner, to shift the matrix-releasing reed associated therewith; the shifting of the reed effects the release of one type matrix from the channel controlled thereby, and the released matrix falls through a chute and enters the assembler. Thus, the pressing of one and another of the ninety keys of the key-board is effective to shift one and another of the ninety reeds, whereby, in the sequence or order in which the particular keys are pressed, particular matrices are successively released and assembled in the assembler.

If the operator of a linotype machine holds a key pressed longer than is necessary to effect the release of a single matrix, the powerfully driven reed-shifting mechanism will automatically produce a second reciprocation or shifting of its associated reed, and, accordingly, a second matrix will be released from the channel and will enter the assembler. That is to say, by holding down a key, the reed controlled by that key will be continuously reciprocated, and a succession of matrices of one type or class will be released. Of course, it is normally desirable that each manipulation of a key will effect the release of only one matrix, and to obtain such desideratum the operator must develop such "touch" that a key will be held down no longer than is necessary to effect a single reciprocation of its associated reed. It will be understood, therefore, that in any automatic operating apparatus which acts directly upon the keys of the machine there is danger of a key becoming stuck in depressed position, whereby all matrices of the class controlled by such key will be released. The assembler will become clogged, and the desired operation of the machine will be obstructed. Furthermore, it often happens that the reed-shifting mechanism becomes dirty or fouled, and fails to respond properly to the keys, whereby the pressing of the keys is ineffective to produce the release of matrices.

More particularly, our invention consists in the provision of apparatus which, in automatically operating a linotype machine, acts directly upon the matrix-releasing reeds, with the consequence and effect that each reed operation is a positive, single operation, capable of effecting the release of a single matrix. Thus, if the apparatus sticks or lags in service, there is absolute assurance against the unintended multiple release of matrices, and any uncertainty as to the operativeness of the usual reed-shifting mechanism is avoided.

While effecting the assembly of type matrices in the assembler, the operator introduces devices known as space-bands at proper points between the successive matrices, to provide the necessary intervals between the words spelled out. The space-bands are stored in a magazine, which is controlled by a reed, operated by a lever mounted adjacent the key-board. The space-bands in known manner are adapted to serve as adjustable wedges within the line of matrices, for forcing the matrices laterally into tight side-by-side engagement. The range or degree of wedging adjustment of a space-band is limited, and it frequently happens that an assembled line of matrices does not include a sufficient number of space-bands to provide the required wedging effect. When this condition arises, the operator performs what is known as hand spacing.

The magazine of a linotype machine includes several channels (usually three) containing auxiliary spacing means, known as em-quads, figure spaces, and thin-spaces. When the operator observes that an assembled line of matrices is not of sufficient width to obtain proper casting, he introduces to the assembler the required number and sort of the above-mentioned auxiliary spacing means. This is done by operating one or another of the keys controlling the three channels last named. The operator then takes the auxiliary spacing means in hand, and inserts them in the line of matrices, next to the space-bands already in the line. With the auxiliary spacing means in position, the otherwise insufficient wedging effect of the space-bands is rendered adequate, to tighten the assembly of matrices in the desired manner.

This matter of hand spacing is a thing which for years has barred the way to successful automatic operation of linotype machines, and our invention embraces a practical solution of the problem.

Referring to the accompanying drawings, Fig. I is a fragmentary view of a linotype machine in front elevation. Apparatus for automatically operating the machine in accordance with our invention is shown partly in elevation and partly in vertical section. Fig. II is a fragmentary view to larger scale, showing in plan from above the tracker plate, over which is fed the perforated tape that controls the automatic operation of the apparatus. Fig. III is a diagrammatic view, illustrating certain details of the linotype machine structure, and the organization of our apparatus therewith. Fig. IV is an isometric, cross-sectional view of a bellows manifold embodied in the apparatus. Fig. V illustrates in plan from above, and Fig. VI in vertical, medial section, one of the unit valves of the apparatus. Fig. VII is a fragmentary view in perspective of a vacuum manifold or header employed in the illustrated embodiment of the invention. Fig. VIII is a perspective, cross-sectional view of a valve chest embodied in the apparatus. And Fig. IX is a diagrammatic illustration of the apparatus.

Referring to Fig. I of the drawings, a linotype machine L is shown fragmentarily. The apparatus of our invention is assembled in and carried by a housing H, and is applied to the machine, as shown. A portion of the key-board K of the machine appears in Fig. I, and the letter R indicates the key-rods which are selectively reciprocable in a vertical direction, in response to the pressing of keys *k* of the key-board. The magazine channels, in which the type matrices are stored, are located within a cover C, and, subject to the control of the key-rods R, the matrices are selectively discharged into chutes *c*, whence they enter the assembler A of the machine in the order of their discharge. The assembler A includes a rack *a* upon which the matrices are assembled in horizontal alignment; when a line of matrices has been completed, the assembler A is shifted vertically upward, by means of an arm *l*, whose swing about its axis of rotation *o* has hitherto been manually effected. As the assembler reaches the upper limit of its range of movement, the transfer carriage T of the machine is by known means caused automatically to travel to the left (Fig. I) in linear course, pushing the assembled line of matrices along guideway G, and introducing them to the casting instrumentalities P of the machine, whereupon a line of type is cast in the pattern of the matrices. Upon removal of the line of matrices from the assembler, the assembler is restored to its lower, matrix-receiving position; the transfer carriage is automatically shifted to the right and restored to its illustrated position; and the discharge of the finished type, and the restoration of the matrices to their respective storage channels, are automatically effected by the machine in known manner. The assembly of another line of type matrices may begin.

The storage magazine M for the space-bands S is located immediately above the transfer carriage T, while the magazine channels for the auxiliary spacing means lie beneath the cover C, in company with the matrix-storing channels. However, the release of the space-bands, as well as the auxiliary spacing means, is controlled by means of key-rods R. Attention will now be directed to Fig. III, to consider how a key *k* controls the release of a matrix *m* from its storage channel M' located under the cover C.

Each key *k* of the key-board is mounted upon and comprises the outer terminal of a lever *b* that swings upon fulcrum *f*; the inner end of the lever *b* engages a vertically movable member *d*; an arm or frame *e* is pivotally supported by a frame element *h* of the machine, and the counterclockwise swing of such arm *e* is effective to raise a channel-controlling key-rod R; the rise of the key-rod R effects the turning of an L-shaped arm *i* about a pin *r*; in consequence, the upper end *t* of arm *i* engages and shifts a slide *u*, which slide operates a matrix-releasing device *v*; the device *v* is a known structure which normally serves as a stay for the line of matrices *m* stored in the channel M', and which, upon each shifting of the slide *u*, is effective to release the foremost matrix *m* from the channel. The released matrix falls down a chute *c* (Fig. I), and enters the assembler A. Thus, each vertical reciprocation of the key-rod R (Fig. III) effects the release of a matrix from the channel.

As the linotype machines are now constructed and operated, the elevation of the key-rod R is automatically effected upon the depressing of key *k*, and the automatic means to such end comprise a continuously rotated friction cylinder *w*; the arm or frame *e* carries a rotary cam *x*; and a trigger *z* normally so supports the distal end of arm *e* that the cam *x* is held out of engagement with the friction cylinder. The pressing of the key *k* effects the rise of member *d*; the rise of member *d* trips the trigger *z*, and thus deprives the distal end of arm *e* of its normal support; the arm *e* swings clockwise, and the edge of cam *x* comes to rest upon the rotating friction cylinder *w*, whereupon the cam and cylinder rotate in

unison; the eccentricity of the cam is such that rotation of the cam, as it rides the cylinder, produces the angular oscillation of arm *e* about its point of pivotal attachment to frame element *h*. During its upward swing, the distal end of the arm *e* engages and raises the key-rod R effecting the release of a matrix *m*, as explained above. The key *k* is only momentarily pressed, and when the arm *e* is carried upward by the rotating cam, the trigger immediately returns to its normal, illustrated position. Accordingly, as the arm *e* reaches the limit of its upward swing and starts downward, it is engaged from beneath by the trigger and arrested. Thus, when a single reciprocation of the reed R has been effected, the cam *x* automatically comes to rest in position above the surface of cylinder *w*. The release of a single matrix is thus effected.

If the key *k* is held down, or becomes stuck in depressed position, the trigger *z* manifestly will remain in tripped position, and the cam *x* will remain in engagement with the cylinder *w*, causing the continuous oscillation of the arm *e*, and the continuous reciprocation of the reed R, whereby all matrices *m* in the channel will be successively released. The apparatus of our invention includes means for automatically and selectively effecting the release of matrices from the magazine channel, and, while it is contemplated that such means may be organized with the keys *k* of the key-board, we preferably organize said means immediately with the key-rods R, whereby all danger of unintended multiple release of matrices is avoided. As shown in Fig. III, a lever **1** is provided for each key-rod R; the lever **1** is pivotally mounted intermediate its opposite ends upon a pin **2**, and the pin **2** is supported by a suitable frame (not shown) within the housing H (Fig. I). An abutment **3** is provided on each key-rod, and the distal end of the lever **1** associated with the key-rod lies immediately beneath such abutment. The opposite end of the lever is pivotally connected to the lower end of a vertical rod **4**; the upper end of rod **4** is connected to the movable wall of a bellows **5**, and the bellows **5** is mounted upon a bellows manifold **6**. The manifold **6** includes a chamber **6***a*, as shown in Fig. IV; normally the interior of the bellows **5** communicates by way of a passage **7** and an orifice **8** with the atmosphere, and due to the inherent elasticity of its flexible walls the bellows normally stands in dilated position. Within the bellows manifold **6** a valve **9** normally blanks communication between the bellows **5** and the chamber **6***a*; the stem **9***a* of the valve is secured to a diaphragm **10**, say a diaphragm of buckskin, that is peripherally secured over a pocket **11** formed in the floor of chamber **6***a*; the pocket **11** is connected, by a tube **12**, to a tubular branch **13***a* of a vacuum manifold or header **13**, which communicates through pipe **14** with a chest **15**, in which a vacuum is maintained by means of an exhaust pump **16**.

A vent tube **112** extends from the top of header branch **13***a*, and the passage between the branch **13***a* and the main body **13** of the header is constricted, as indicated at **13***b* in Figs. III and VII. The outer end of the vent tube **112** is adapted to be alternately opened and closed, through the instrumentality of means hereinafter described; normally the outer end of the vent tube is closed, and the branch **13***a*, vent tube **112**, and pocket **11** are maintained at subatmospheric pressure by the action of the vacuum system **14**, **15**, **16**. When, however, the vent tube is opened to the atmosphere, air rushes into branch **13***a*, tube **12**, and pocket **11** faster than the vacuum system can remove it through the constricted passage **13***b*, whereby air at substantial pressure (not necessarily atmospheric pressure) exists in the pocket **11** so long as the tube **112** is vented to the atmosphere.

A conduit **17** connects the manifold chamber **6***a* to a valve chest **18**; as shown in Figs. III and VIII, the valve chest includes a chamber **18***a*, communicating by way of a conduit **19** and pipe **14** (cf. also Fig. IX) with the vacuum chest **15**, whereby a condition of subatmospheric pressure prevails in said chamber **18***a*. Communication between chamber **18***a* and conduit **17** is controlled by a slide valve **20**; the slide valve normally stands in closed position (Fig. III), and in such position of the valve the conduit **17** is vented to the atmosphere through a passage **21**. A closure flap **22** is provided over the mouth of passage **21**, and the valve **20** carries a pin **23** that, in the closed position of the valve, serves to hold the flap ajar, note dotted line position in Fig. VIII, whereby, as already mentioned, the conduit **17** and chamber **6***a* normally are subject to atmospheric pressure.

The slide valve **20** is connected by a stem **24** to the movable wall of a bellows **25** (Fig. III), and the organization is such that the collapse of the bellows is effective to shift the valve into open position (Fig. VIII). The pin **23** is carried inward as the valve moves into open position; the flap **22** is thus freed and swings into position over the mouth of the passage **21**; and the conduit **17** is opened to the influence of the vacuum which is maintained in chamber **18***a*. Accordingly, the conduit **17** becomes effective to withdraw the air from the chamber **6***a* of the bellows manifold **6**. While a vacuum or a condition of subatmospheric pressure is thus maintained in chamber **6***a*, the tube **112** is, by means presently to be described vented to the atmosphere. Air enters the pocket **11**, and the pneumatic pressure below the diaphragm **10** (Fig. IV) becomes greater than the pressure prevailing in the exhausted chamber **6***a* above it. In consequence, the diaphragm rises, carrying the valve **9** upward, closing the orifice **8**, and uncovering the port **6***b* through which valve stem **9***a* extends, whereby communication is established between the evacuated chamber **6***a* and the passage **7**. Thereupon, the air is exhausted from the bellows **5**; the bellows **5** collapses; the rod **4** is driven downward; and the lever **1** (Fig. III) is swung counterclockwise, effecting the matrix-releasing rise of the key-rod R.

As will hereinafter more fully appear, the bellows **25** is caused to remain collapsed for only an instant; that is, the valve **20** is stayed in open position for only a short interval of time. When the valve **20** again enters closed position, the pin **23** becomes effective to move and hold the flap **22** away from the mouth of passage **21**, whereby air again enters conduit **17**, and destroys the vacuum in chamber **6***a*. Simultaneously with the closing of valve **20**, the venting of tube **112** to the atmosphere is interrupted, and, by way of constricted passage **13***b*, the air is withdrawn from the tube **12** and the pocket **11**. Thereupon, the restored atmospheric pressure in chamber **6***a* forces the diaphragm **10** downward, moving the valve **9** back into its illustrated position, and air, flowing inward through orifice **8** and passage **7**, enters the bellows **5**. The bellows expands; the rod **4** and lever **1** are restored

to their normal positions, permitting the key-rod R to drop back into its illustrated position of rest. It will be understood, therefore, that, by temporarily evacuating the chamber 6a, and, by venting the tube 112 to the atmosphere while such chamber is so evacuated, the release of a single matrix m is effected.

The valve-shifting operation of the bellows 25 is controlled by a unit valve 26 which includes a chamber 26a, as illustrated in detail in Figs. V and VI. A conduit 170 serves to maintain communication between such chamber and the vacuum line 14, and a condition of subatmospheric pressure is normally maintained in said chamber. A valve 90 normally prevents communication between the chamber 26a and a passage 70 that is connected, by tube 27, to the bellows 25, and atmospheric pressure normally prevails in the passage 70 and in the internal region or chamber of bellows 25. The floor of chamber 26a includes a pocket 110, closed from above by a flexible diaphragm 100; the lower end of valve stem 90a is secured to the diaphragm, and a vent tube 120 opens at its inner end into the pocket 110, while the outer end of tube 120 is normally closed by means described below. As distinguished from the chamber 6a in manifold 6, the chamber 26a remains evacuated during normal operation of the apparatus, and the pocket 110 and vent tube 120 communicate through a bleed-hole 28 with the normally evacuated chamber 26a. When the tube 120 is vented to the atmosphere, the inrush of air is greater than the capacity of the bleed-hole for air removal. Accordingly, pneumatic pressure is established beneath the diaphragm 100, while vacuum exists above. In consequence, the diaphragm rises; the valve 90 is elevated, closing the orifice 80 and opening communication between the passage 70 and the vacuum chamber 26a. Thereupon, the air is withdrawn from bellows 25; the bellows collapses, and draws slide valve 20 into open position. It will be understood, therefore, that the venting of tube 120 to the atmosphere is effective to open valve 20, whereupon the chamber 6a is exhausted of air. As already explained, the venting of the tube 112 to the atmosphere, while the chamber 6a is so exhausted, effects the collapse of the bellows 5, and thereby effects a matrix-releasing operation of the key-rod R. Alternately, the closing of the tubes 112 and 120 is followed by the evacuation of the diaphragm pockets 11 and 110 of the devices 6 and 26; thus, the valves 9 and 90 are drawn into their lower positions; air enters bellows 25; the bellows expands, closing the valve 20, whereby the chamber 6a is restored to normal communication with the atmosphere by way of tube 17 and passage 21; the downward movement of the valve 9 opens the orifice 8, and air enters the bellows 5; and thereupon the bellows 5 expands, raising the rod 4, and restoring the key-rod to its normal position of rest.

In the above described manner, a complete matrix-releasing operation of the apparatus is automatically effected by the momentary venting of the tubes 112 and 120 to the atmosphere.

As already mentioned, the usual linotype machine includes 90 keys on its key-board, and with each of the ninety key-rods R that are normally responsive to such keys, we organize a bellows 5. Conveniently, we provide six manifolds 6, which each carry a rank of fifteen of such bellows, and, as shown in Fig. IX, the six manifolds 6 are arranged in a bank, leaving adequate clearance between adjacent manifolds for the operation of the bellows. The operating rods 4 of the ninety bellows each control a key-rod R of the machine (in the manner indicated in Fig. III) and, advantageously, the six ranks of bellows 5 are vertically offset from one another, to admit of the close organization of the operating rods 4, cf. Fig. IX.

Turning again to Fig. IV, it will be understood that each manifold 6 includes a valve 9 and an inlet orifice 8 for each bellows 5 in the rank carried thereby, and that the chamber 6a of the manifold includes fifteen diaphragms 10 for severally controlling the valves 9. Each of the fifteen pockets 11, closed by the diaphragms 10, is provided with its own tube 12, while a single conduit 17, subject to a slide valve 20, controls pneumatic pressure conditions within the chamber 6a. When subatmospheric pressure is established within chamber 6a of the manifold (such subatmospheric pressure being established by opening the valve 20, as already explained), any one of the bellows 5 mounted on the manifold may be collapsed, by bringing its associated tube 12 into communication with the atmosphere. It will be understood, then, that each bellows manifold in the bank of six (Fig. IX) is provided with a conduit 17; each conduit 17 is independently controlled by a slide valve 20, whereby subatmospheric pressure may be selectively established in the chambers 6a of the six manifolds; each slide valve 20 is independently operable by a bellows 25; and, in the manner already described, the operation of each bellows 25 is controlled by a unit valve 26, which in turn is subject to the control of a vent tube 120. Thus, by opening one or another of the six vent tubes 120 to the atmosphere, the chamber 6a within one or another of the six manifolds 6 may be exhausted, and, by admitting air to one or another of the fifteen tubes 12 organized with the particular manifold that has been exhausted, one or another of the bellows 5 mounted on such manifold may be collapsed.

As shown in Fig. IX, the header 13 is provided with fifteen branches 13a, each provided with a vent tube 112. The tube 12 associated with the bellows 5 standing first in line in the row of fifteen bellows carried by each manifold 6 is connected to the branch 13a that stands first in the line of fifteen branches carried by the header 13. There being six manifolds 6, there are six first bellows 5, and the six tubes 12 severally controlling these first bellows are all connected to the first branch 13a on the header. The six tubes 12 severally controlling the six second bellows 5 in the six rows of bellows are connected to the second branch 13a of the header 13; the six tubes 12 of the third bellows of the six rows are connected to the third branch 13a of the header; and in such manner the six tubes 12 of the bellows in each of the fifteen correlated groupings of six bellows are connected to one of the branches of the header 13, and the relation of the groups of six (in the fifteen groups of bellows) corresponds with the relation to one another of the several header branches 13a to which the tubes 12 are connected in such grouping. Thus, the ninety tubes 12 controlling the ninety bellows 5 carried by the six manifolds 6 are connected in groups of six to the fifteen header branches 13a, whereby the venting of one or another of the fifteen tubes 112 will admit air to one or another of the fifteen groups of tubes 12. In Fig. IX, the connection of the tubes 12 of the first group of bellows is illustrated, the connection of the remaining fourteen

groups of tubes 12 being omitted for the sake of clarity.

Considering the six first bellows 5 on the six manifolds 6, it will be understood that the venting of the tube 112 of the first header branch 13a will admit air into the six tubes 12 connected thereto, in such manner as will permit the operation of the six bellows. But, as has been already described, it is also necessary that the chamber 6a within a manifold 6 must be exhausted before the operation of any of the bellows on such manifold may be effected. Accordingly, while all six of the first bellows 5 are prepared for operation by the venting of tube 112 of the first header branch 13a, none of the six bellows will be operated until, by the opening of a valve 20, one or another of the manifold chambers 6a has been exhausted. That is to say, by venting one or another of the valve-controlling tubes 120, one or another of the manifolds 6 will be exhausted, and only one of the six bellows that are otherwise made ready for operation, by the venting of the said tube 112, will be collapsed. Thus, by selectively venting one of the six tubes 120 simultaneously with the venting of the first tube 112, the operation of any desired one of the six first bellows may be effected. By venting the tube 112 of the second header branch 13a conjointly with the selective venting of one of the six tubes 120, any of the six second bellows 5 may be operated. Accordingly, it will be understood that, by means of the fifteen vent tubes 112 and the six vent tubes 120, any one of the ninety bellows 5 may be operated. That is to say, by means of twenty-one tubes, arranged in two groups (112 and 120), the ninety bellows may be independently and selectively operated; the selective, paired venting of the tubes in the two groups is all that is required to effect the automatic and selective operation of the matrix-releasing key-rods R of the linotype machine. Our apparatus includes means which cooperate with a perforated tape or ribbon in effecting automatically such paired venting of the tubes 112 and 120.

The tape or ribbon will ordinarily be formed of paper, and the perforations therein will ordinarily be provided before the tape is introduced to the apparatus. As shown in Figs. I and II, an electric motor 29 is adapted to draw the previously perforated tape P—T from a supply spool 30 and across the face of a tracker plate 31, which tracker plate in this case is of the arcuate section illustrated. Conveniently, the opposite margins of the tape P—T are slotted, as indicated at 32; feeder wheels 33 and 34, having teeth adapted to engage the marginal slots of the tape, are rotatably mounted at the entering and leaving ends of the tracker plate 31. The feeder wheels 34 at the leaving end of the tracker plate are integrated with a shaft 35 that is powerfully rotated by the motor 29. A reduction gear-box 36 and a clutch 37 are included in the driving connections between the motor and the shaft 35; the shifting of the clutch between engaged and disengaged positions is effected by means of a lever 38, and a tension spring 39 acts upon the lever normally to hold the clutch in engaged position, whereby the shaft 35 is continuously rotated and the perforated tape is advanced across the tracker plate, in the direction of the arrow in Fig. I. Idler wheels 401, supported at the distal end of a swingable bracket 41, ride the upper surface of the tape, insuring engagement of the feeder wheel teeth with the marginal slots 32 of the tape, and serving to hold the tape in snug face-to-face engagement with the surface of the tracker plate. The movable wall of a normally expanded bellows 25a (Figs. I and IX) is connected to distal end of the clutch-throwing lever 38, and a unit valve 260, identical in structure and function with the unit valves 26, is adapted, by the venting of its control tube 120a, to effect the collapse of bellows 25a, whereby the lever 38 is swung against the resistance of spring 39, and the clutch 37 is disengaged. The rotation of shaft 35, and the consequent advance of the tape P—T is interrupted, and the shaft and tape remain at rest so long as the bellows 25a is deflated.

The tracker plate 31 includes fifteen orifices 150, six orifices 60, and four orifices 40, which extend in substantial alignment transversely of the tracker plate, as indicated in Fig. II. The vent tubes 112 of the fifteen header branches 13a severally are connected to, or terminate in, the fifteen orifices 150, and the vent tubes 120, which control the six slide valves 20, severally terminate in the six orifices 60, cf. Figs. III and IX. The paper tape P—T includes a series of perforations, arranged in pairs o . . . o transversely of the tape, as shown in Fig. II; during the advance of the tape over the tracker plate, the paired perforations in the tape move successively into momentary registry with one pair or another of the orifices 60, 150 in the tracker plate; that is, one perforation of each pair registers with one of the six orifices 60 while the companion perforation registers with one of the fifteen orifices 150. While one pair of the orifices 60, 150 are momentarily uncovered by the registry therewith of a pair of perforations o . . . o, all the remaining orifices 60, 150 in the tracker bar are covered by the tape. The vacuum or partial vacuum normally prevailing in the tubes 112, 120 is effective through the orifices 60, 150 to insure a snug engagement of the tape with the face of the tracker plate, whereby imperforate portions of the tape provide an effective seal over all orifices but those two which at a given instant may be in registry with a pair of perforations in the tape. The registry of a pair of perforations o . . . o with two of the orifices 60, 150 in the tracker plate is effective to vent one of the fifteen tubes 112 and one of the six tubes 120. As already mentioned, such joint venting of tube 112 and tube 120 is effective to produce an automatic matrix-releasing operation of one of the key-rods R. Thus, it is merely a matter of properly spacing the perforations of each pair relatively to one another and laterally of the tape P—T, to obtain any one of the ninety operations which the key-rods R control, and manifestly a series of paired perforations in the tape may be provided in predetermined arrangement, to effect any desired sequence of individual matrix-releasing operations. That is to say, the travelling tape may be adapted automatically to operate the machine in such selective manner as to build any predetermined line of type matrices in the assembler A.

In a linotype machine, the release of space-bands is usually effected by means of a rod (not shown, but similar to the key-rods R) that is vertically reciprocated by means of a hand lever D (Fig. I). In our apparatus, we provide a bellows 5a (Fig. IX), having a rod 4a that is adapted to operate the space-band releasing rod, as the rods 4 are adapted to operate the key-rods R, above described. The bellows 5a is mounted upon an independent manifold 6c, con-

nected by a conduit 190 to the vacuum line 14, and having a vent tube 12a terminating in the outermost orifice 12a' of the four orifices 40 in the tracker plate (cf. Figs. II, III, and IX). In such manner as the rods 4 respond to the admission of air to their bellows-controlling tubes 12, the rod 4a responds to the venting of tube 12a, and effects operation of the space-band releasing rod. The tape P—T is provided with perforations o1 which during the travel of the tape move into momentary registry with the orifices 12a'. Each time that a perforation o1 registers with the orifice 12a', air enters the tube 12a; the rod 4a is operated; in consequence, a space-band S is released from the magazine M, and enters the assembler A. As indicated in Fig. II, the perforations o1 may be so disposed longitudinally of the tape that a space-band will be automatically introduced between each word spelled out in a given line of type matrices, or at any other desired point in the line.

When a line of type matrices and space-bands has been assembled in the above-described manner, the assembler A is automatically elevated, and the transfer carriage automatically removes the line and presents it to the type-casting apparatus P (Fig. I). A linotype machine, as it is now constructed, embodies means that operate automatically, upon the rise of the assembler, to shift the transfer carriage, then to cast type in the pattern of the line of matrices, then to deliver the cast line of type, and, after the casting operation, to return the matrices and space-bands to their several magazine channels. Whereas the shifting of the assembler has usually been manually effected, we provide means for effecting such operation in coordination with the assembly of matrices; that is, when a full line of matrices has been completed, the assembler is automatically elevated, whereupon the usual and known instrumentalities of the linotype machine come into play.

As shown in Figs. I and IX, a piston and cylinder device 43 is provided, and the piston rod 42 of the device is pivotally connected at its upper end to the assembler lever 1. The piston in the cylinder normally rests at the lower end of its range of vertical reciprocation. A vaccum line 44 extends from the top of the cylinder to the valve chest 18 (Fig. IX), and a slide valve 20a is operable to establish communcation between such vacuum line 44 and the conduit 19 leading to the vacuum system 14, 15, 16. The valve 20a normally stands in closed position, and communication between the line 44 and the vacuum system normally is blanked. A normally dilated bellows 25b, subject to a unit valve 26c controlled by a vent tube 120b, is adapted to effect the movement of the valve 20a into open position. The bottom of cylinvalve 43 is open to the atmosphere, whereby, when the valve 20a opens and vacuum is created above the plunger in the cylinder, the plunger rises, swinging the lever 1, and carrying the assembler A into its upper position.

In Figs. I and IX, it will be observed that a rod 45 is secured to the transfer carriage T; the rod 45 carries two valve-throwing fingers 46 and 47 that are adapted to cooperate with the operating arm 48 of a valve 49; the valve 49 is included in the vent tube 120b that controls the operation of bellows 25b; the vent tube 120b terminates in an orifice 12b' in the tracker plate, and the valve 49 normally stands in open position, so that communication between unit valve 26c and orifice 12b' is normally open. Thus, the venting of orifices 12b' serves to admit air to the unit valve 26c, whereby the bellows 25b is collapsed, the valve 20a is slid into open position, air is withdrawn, by way of conduit 44, from the upper portion of cylinder 43, and the plunger 42 rises, carrying the assembler A into its upper position. The vent tube 120a, that controls the unit valve 260 of clutch-operating bellows 25a, is connected to the vent tube 120b, as indicated in Fig. IX; a valve 50 is included in the tube 120a, and a spring 51 serves normally to maintain the operating arm 52 of the valve in its illustrated position, in which communication between the unit valve 260 and tracker plate orifice 12b' is unrestricted. As shown in Fig. II, the tape P—T is provided with a perforation o2, arranged behind the series of perforations o . . . o and o1 that effects the automatic assembly of a complete line of type matrices and space-bands in the assembler A. When the tape P—T, in advancing over the tracker plate, has effected such assembly of a line of matrices and space-bands, the perforation o2 moves into registry with the orifice 12b'. Thereupon, air enters tubes 120a and 120b; unit valves 260 and 26c function, and bellows 25a and 25b are collapsed, whereby the clutch 37 is disengaged and slide valve 20a is opened. Thus, the travel of the tape over the tracker plate is interrupted, leaving the perforation o2 in tube-venting registry with the orifice 12b', and the vacuum system 14, 15, 16 becomes effective through conduit 44, to draw the plunger in cylinder 43 upward and elevate the assembler A. The plunger rod 42 carries a finger 53 that is downwardly flexible, but upwardly inflexible, from its normal horizontal position. As the plunger rod 42 moves upward and elevates the assembler A, the finger 53, upon coming into engagement with valve arm 52, yields downward (cf. the dotted line position of the finger in Fig. I), and brushes past the arm 52, whereby the valve 50 remains in open position, and the unit valve 260 remains in communication with vented orifice 12b'. As the rising assembler A reaches its elevated position, the transfer carriage T, as already mentioned, is automatically shifted from right to left, removing the line of assembled matrices from the assembler, and introducing them to the automatic type-casting mechanism of the machine. The transfer carriage carries the rod 45 with it, as the arrow indicates in Fig. IX, and, during such movement of the rod 45, the finger 47 moves into engagement with and throws the arm 48 of valve 49. This closes the valve. Communication between the unit valve 26c and the open tracker plate orifice 12b' is blanked; the bellows 25b expands and closes valve 20a; air enters conduit 44; the plunger in cylinder 43 moves downward, and permits the assembler to return under gravity to its normal matrix-receiving position. The finger 47 is so positioned on the rod 45 that the valve 49 is not swung into closed position, until transfer carriage T has traversed an interval sufficient to effect the removal of the complete line of matrices from the assembler A. Thus, there is no danger of a premature lowering of the assembler.

During the descent of the assembler to its normal position, the finger 53 on the plunger rod 42 engages the valve arm 52 from above, and swings the arm downward, into valve-closing position; the angular downward swing of the arm 52 continues until the tip of the finger 53 brushes past or clears the tip of the arm, whereupon the spring 51 draws the arm upward into its normal position. Thus, as the assembler descends and enters its

normal matrix-receiving position, the valve 50 is momentarily closed; the passage through tube 120a is momentarily blanked; the unit valve 260 operates to admit air to the bellows 25a; the bellows expands; the clutch 37 returns to engaged position, and the tape again travels over the tracker plate. It will be understood, therefore, that the momentary closing of the valve 50 is adequate to start the travel of the tape over the tracker plate, whereby the perforation o2 is moved from registry with the orifice 12b'. Thus, as the assembler enters normal position, the vent tubes 120a and 120b are closed at orifice 12b', and remain so until the perforation o2 at the end of a succeeding group of matrix-assembling perforations o . . . o comes into registry with such orifice.

It will be recalled that, in the right-to-left shifting of the transfer carriage, the finger 47 operates to close the valve 49 as soon as the line of matrices is removed from the assembler. That is to say, while perforated tape P—T is at rest upon the tracker plate and the perforation o2 lies in registry with the orifice 12b', the moving carriage T first removes the assembled line of matrices from the assembler, and then, by means of finger 47, closes the valve 49. Thus, while the orifice 12b' is still vented to the atmosphere, the valve 49 is operated to blank tube 120b, whereby the valve 20a is closed and the assembler is lowered. It will be understood, however, that the tube 120a remains open, during the initial downward movement of the assembler, whereby the clutch 37 is held in disengaged position, until the assembler approaches its lower, matrix-receiving position, and the finger 53 throws the valve 50. As the valve 50 closes and the tape P—T again travels, closing the orifice 12b', the valve 50 returns to normal position, under influence of spring 51, and is ready again to disengage the clutch, when a new line of matrices has been assembled. As already mentioned, the finger 47 on rod 45 throws the valve 49 into closed position when the transfer carriage, in its automatic right-to-left movement, has removed the line of matrices from the elevated assembler. As distinguished from the valve 50, however, the valve 49 does not return immediately to its normal position of adjustment, but remains in closed position, while the transfer carriage proceeds in its right-to-left travel, and while the assembler moves downward in response to the closing of valve 49. When the transfer carriage has delivered the line of matrices to the casting apparatus of the linotype machine, and its course of travel is automatically reversed, the finger 47, in being flexible to the left of its normal vertical position, brushes past the arm 48, whereby the valve 49 remains closed, until the rigid finger 46 on rod 45 engages and swings the arm 48 clockwise, thereby resetting said valve in open position. The parts are so proportioned and the operation is so timed that the valve 49 is not reset in open position until the assembler has reached its lower position and the tape P—T is again travelling over the tracker plate. Thus, after the assembler is restored to matrix-receiving position, and after the travel of the perforated tape is again in progress and the tracker plate orifice 12b' is again sealed by the tape, and while the transfer carriage is entering its normal position of rest above the assembler, the valve 49 is reset in open position. Thus, the apparatus is restored to such condition as to effect, upon the automatic assembling of a new line of type matrices and space-bands in the assembler, another automatic elevation of the assembler. And it will be perceived that the operation of the composing or type-casting machine is rendered wholly automatic.

The elimination of hand spacing remains for consideration. In the usual linotype machine three of the keys *k* of the key-board are arranged severally to control the release of em-quads, figure spaces, and thin spaces, and, as explained in the forepart of this specification, these spacing means must in some cases be introduced with each space-band in the assembler, to bring the line of matrices therein up to proper "gauge".

Sometimes the heavy em-quads are used with the space-bands; again the lighter figure spaces or thin-spaces are used, depending upon the amount of slack to be taken up in the line of matrices. In the ensuing specification means are described for automatically assembling paired thin-spaces and space-bands at desired points in a line of matrices in the assembler, and it will be understood that identical means may be provided for effecting the paired assembly of em-quads and space-bands, or, alternately, the paired assembly of figure spaces and space-bands, at desired points in the assembler. That is to say, the description of automatic "hand-spacing," as it is applied to thin-spaces, will be comprehensive of the operation as it may be effected with em-quads or figure spaces. And in the appended claims the term "auxiliary spaces" will be understood to cover all three.

The eighth key *k* (not shown) in the second row of keys on the key-board K controls the individual feeding of thin-spaces to the assembler The bellows 5 that operates the key-rod R of the thin-space key is eighth in the line of fifteen bellows carried by the second manifold 6 (considering the uppermost manifold the first) in the bank of six shown in Fig. IX. To effect the automatic release of a thin-space, the chamber (6a) of such second manifold must be exhausted, and the eighth tube 112 must be simultaneously vented to the atmosphere. It will be understood from the foregoing description that the venting of the second orifice (602) of the six orifices 60 in the tracker plate, simultaneously with the venting of the eighth orifice (1508) in the line of fifteen orifices 150, will be effective to operate the thin-space releasing bellows 5. And it will be further understood that a pair of perforations o . . . o may be so "spotted" in the series of paired perforations in the tape P—T that the said orifices (602 and 1508) will be vented to effect the introduction of a thin-space at any desired point in a line of matrices being assembled. However, it will be recalled that "hand spacing" involves not merely the introduction of auxiliary spaces, but consists in the grouping of auxiliary spaces with space-bands, and in most cases the need for auxiliary spaces with the space-bands is not known until a line of matrices has been assembled.

To achieve automatic "hand spacing", we provide in the tape P—I a perforation o3 (Fig. II), at the end of each series of perforations o . . . o and o1, and in the tracker plate 31 we provide an orifice oo3 which, during the travel of the tape, is adapted to be vented by the perforation o3 and to operate means for effecting the automatic release of a thin-space each time that a space-band is released. The last-mentioned means comprise a valve 55 (Fig. IX), having a

valve-adjusting arm **56** that is controlled, by means of a reciprocable throw rod **57**. A by-pass tube **120** extends from the valve **55** to the vent tube **112** that terminates in the tracker plate orifice **1508**, it being recalled that the venting of such orifice is one of the conditions which must be established, to effect the automatic release of a thin-space. In the valve chest **18**, a normally closed slide valve **20***d* is adapted, upon the collapse of a bellows **25***d*, to be shifted into open position; the collapsing of the bellows **25***d* is controlled by a unit valve **26***d*, and the venting of a tube **120***d*, extending from the unit valve **26***d* to the rotary valve **55** operates the unit valve to collapse the bellows, and thereby to effect the shifting of the slide valve **20***d* into open position, just as the venting of a tube **120** causes a valve **20** to be shifted into open position. When the slide valve **20***d* opens, the air in the aforementioned second manifold **6** is exhausted, by way of the second conduit **17** and a by-pass pipe **17***d*. Accordingly, each time that the tubes **1120** and **120***d* are vented, the second manifold **6** will be exhausted, and, concurrently, the tube **112** which terminates in orifice **1508** will be vented, thereby establishing the already described conditions essential to effect the release of a thin-space.

A vent tube **112***d* extends from the valve **55** to the tracker plate orifice **12***a'*; when a perforation *o*1 in the tape P—T moves into registry with the orifice **12***a'*, the tube **12***a* is vented, and, as explained above, the bellows **5***a* operates to release a space-band. Normally, the valve **55** is adjusted in its illustrated position, and the terminals of the three tubes **1120**, **120***d*, and **112***d* within the valve are blanked, whereby the apparatus operates to assemble matrices and space-bands individually. When, however, the line of matrices requires auxiliary spaces, and a perforation *o*3 has accordingly been provided in the tape P—T, the otherwise normal operation is modified, as follows:

As the travelling tape approaches the position on the tracker plate in which the leading pair of matrix-releasing perforations *o* . . . *o* comes into alignment with the orifices **60**, **150**, the perforation *o*3, trailing at the end the series of perforations *o*. . . . *o* and *o*1, moves into momentary registry with the tracker plate orifice *oo*3. This momentary uncovering of orifice *oo*3 vents a tube **112***e* to the atmosphere; in consequence a unit valve **26***e* operates to collapse a bellows **25***e*; the collapse of bellows **25***e* effects the movement of throw rod **57** to the left (Fig. IX), and the arm **56** is swung into its alternate position, in which communication among the tubes **1120**, **112***d* and **120***d* is established. Under these conditions, each time that a perforation *o*1 in the travelling tape uncovers the orifice **12***a'* and effects the release of a space-band, the tubes **1120** and **120***d* are vented to the atmosphere by way of tube **112***d*, and cause the release of a thin-space. Thus, a space-band and a thin-space are caused to enter the assembler A together, or in immediate succession.

The movable wall of the bellows **25***e* is not secured to the rod **57***a*, but is adapted to abut a stop **57***a* thereon, in such manner that the rod is shifted when the bellows collapses. While the registry of perforation *o*3 with the orifice *oo*3 is but momentary, and while the bellows **25***e* therefore remains collapsed for only a moment, the immediate return of the bellows **25***e* to dilated condition does not affect the adjustment of the valve **55**, the movable wall of the bellows simply recedes from its abutment with stop **57***a*, and the rod **57** and the valve **55** temporarily remain in the positions in which the collapsing action of the bellows has shifted them. Accordingly, as the tape continues in its travel over the tracker plate, the successive registry of one perforation *o*1 after another with the orifice **12***a'* will effect the paired assembly of space-bands and thin-spaces at desired points in the line of matrices being assembled. Thus, hand spacing is achieved automatically.

When the last of the series of perforations *o* . . . *o* has passed over the tracker plate orifices **60**, **150**, and a complete line of matrices and paired space-bands and thin-spaces has thus been assembled, the trailing perforation *o*3 comes into registry with the orifices **12***c'*, at substantially the same instant that the perforation *o*2 moves into registry with the orifice **12***b'*, to effect the automatic elevation of the assembler and the other operations of the apparatus, already described. The registry of the perforation *o*3 with the orifice **12***c'*, causes the venting of a tube **112***f*; the venting of tube **112***f* operates *a* unit valve **26***f'*, which in turn effects the collapse of a bellows **25***f*; and the collapse of bellows **25***f* effects the left-to-right movement of the throw rod **57**, whereby the valve arm **56** is restored to its illustrated position. Thus, communication among the tubes **1120**, **112***d*, **120***d* is blanked, and normal matrix-assembling operation—operation without automatic "hand spacing"—may proceed. That is to say, when the registry of perforation *o*2 with orifice **12***b'* effects the elevation of the assembler, together with an intermission in the advance of the tape P—T, the simultaneous registry of perforation *o*3 with orifice **12***c'* restores the apparatus to condition for normal operation.

It often happens that auxiliary spacing means must be used alone—without paired association with a space-band—in a line of matrices that also includes auxiliary spacing means that are paired with space-bands. That is to say, while our apparatus is operating to effect "hand spacing" in the line of matrices being assembled, it may be desirable to introduce individually to the line one or more auxiliary spaces. To this end, a check valve **116** is included in the vent tube **1120**. The check valve permits air-flow in the direction of the arrow, and prevents flow in the opposite direction. When the apparatus is in condition to effect automatic "hand spacing," the venting of orifice **12***a'* in the tracker plate admits air to tubes **112***d*, **120***d*, and **1120**, to effect in the described manner the release of a thin-space, while simultaneously admitting air to tube **12***a*, to effect the release of a space-band. While the apparatus is thus operative, the orifices **602** and **1508** may be vented by a pair of perforations *o* . . . *o* in the tape, whereby to effect the desired release of a thin-space alone. It will be perceived that such venting of the orifice **1508** will not be effective upon the space-band controlling tube **12***a*, since the check valve serves to prevent the flow of air towards the valve **55**. (Otherwise the air admitted through orifice **1508** could reach the tube **12***a*, through valve **55** and tube **112***d*, and would produce a space-band releasing operation of bellows **5***a*.) Accordingly, while the apparatus is automatically effecting "hand spacing," during the assembly of a given line of matrices, it is possible automatically to introduce auxiliary spacing means alone at desired points in the line.

When there is no tape on the tracker plate **31**, such as may be the case when a run of tape has

been completed and a new tape is being introduced, it is desirable that the effect of the vacuum in chest **15** shall be neutralized, otherwise the venting of all the orifices in the tracker plate together would manifestly produce many needless and perhaps destructive operations of valves and bellows. To such end, we provide a master valve **20***h*, controlling communication between the vacuum chest **15** and the other elements of the apparatus, cf. Figs. III and IX. The valve **20***h* stands in retracted or open position during the normal operation of the apparatus, but if for any reason the tape P—T becomes torn, or is removed from the tracker plate, an orifice **12***d'* is uncovered, venting a tube **12***h*. The venting of tube **12***h* operates a unit valve **26***h*, causing the collapse of a bellows **25***h*, and the shifting of valve **20***h* into closed position. The unit valve **26***h* obtains its evacuating effect through a conduit **170***h* extending immediately into the vacuum chest **15**, so that the closing of the valve **20***h* does not interrupt the operation of the unit valve **26***h* in maintaining the bellows collapsed, whether or no the master valve **20***h* is closed. Thus, the bellows **25***h* remains collapsed and the master valve remains closed, so long as the tape is not operatively organized with the tracker plate.

Throughout the drawings and the above specification, we have in the main shown and described bellows as the pneumatic means for effecting the various operations of our apparatus, but we wish it to be understood that cylinder and plunger units or the like may be used in place of the bellows.

The provision of the perforated tape P—T is not primarily the concern of our present invention, but we may mention that several tape-perforating apparatuses are known to the art. We have in mind, for example, a perforating apparatus which is commonly used in conjunction with a monotype machine—a machine well known in the printing art. Such apparatus includes a key board, by means of which an operator controls the operation of the apparatus in selectively perforating a paper tape, whereby the tape is adapted to effect the automatic operation of the monotype machine. Again, many existing news distributing agencies are equipped with tape-perforating teletypewriters, whose individual or collective operation is controlled electrically in a distant sending station. In view of such present practice, the engineer will know how to provide mechanism for perforating the tape P—T in such manner as to effect the desired operation of our automatic matrix-assembling apparatus.

While the particular tape-perforating apparatus is, as mentioned above, of only incidental concern in the invention, it will be understood that the particular arrangement of the "hand spacing" perforations is of the essence of the invention. The "hand spacing" perforations are provided after each series of matrix-assembling perforations has been formed in the tape. In this case the "hand spacing" perforation *o***3** is shown as provided at the end of the series of matrix-assembling perforations *o . . . o* shown in Fig. II. Thus, after the perforations *o . . . o* (the perforations necessary to effect the assembly of a specified line of type matrices, space-bands, and auxiliary spaces) have been provided in the tape, and the operator of the tape-perforating machine has had opportunity to observe that "hand spacing" is required in the line, he need not retrace his work, but may then provide a perforation **o3**, which will be just as effective as though the need for "hand spacing" was known and fulfilled at the beginning of the line of matrix-assembling perforations.

We contemplate that a central news-distributing office may be adapted to operate tape-perforating machines in various newspaper plants throughout the country, whereby each plant will be supplied automatically with tape for automatically operating its linotype, intertype, or other composing machines. Indeed, it will be apparent to the engineer that the tape-perforating mechanism may be organized immediately with a composing machine, whereby it becomes possible for a single operator in New York, say, to control the automatic operation of composing machines in any desired number of distant cities. In such way type for the printing of news—particularly syndicated news—may be more quickly and economically accomplished.

We claim as our invention:

1. In a type-casting machine including an assembler movable between receiving and discharging positions, a plurality of magazine channels for the storage of type matrices, a plurality of key-rods severally controlling the release of matrices from said channels, and means for introducing the released matrices into said assembler when it is in receiving position; the combination of a vacuum system including a plurality of pneumatic actuating devices severally organized immediately with said key-rods, pneumatic means for moving said assembler between its alternate positions, a tracker plate, and means responsive to the advance of perforated tape over said tracker plate for selectively operating said pneumatic devices, whereby a line of predetermined matrices is assembled in said assembler and said assembler is automatically moved into discharge position.

2. In a type-casting machine including an assembler, a plurality of magazine channels for the storage of type matrices, a plurality of key-rods severally controlling the release of matrices from said channels, and means for introducing the released matrices into said assembler; the combination of a vacuum chest, a plurality of pneumatic actuating devices severally organized immediately with said key-rods, a tracker plate, and means responsive to the passage of tape over said tracker plate for selectively subjecting said devices to the effect of said vacuum chest, whereby said devices automatically operate to assemble a line of predetermined matrices in said assembler.

3. In a type-casting machine including an assembler movable between receiving and discharging positions, a plurality of magazine channels for the storage of type matrices, means including a plurality of elements severally operable for effecting the release of matrices from said channels, and means for introducing the released matrices into said assembler when in receiving position; the combination of a vacuum system including a plurality of pneumatic actuating devices severally organized with said operating elements, pneumatic means for moving said assembler between its alternate positions, a tracker plate, and pneumatic means responsive to the advance of perforated tape over said tracker plate for selectively operating said devices, whereby a line of predetermined matrices is automatically assembled in said assembler, and means responsive to said advance of tape for effecting automatic operation of said assembler-moving means in coordination with the operation of said devices in effecting such assembly of matrices.

4. In a type-casting machine including an as-

sembler for receiving a line of type matrices, a transfer carriage for removing such line of type from said assembler, a plurality of magazine channels including type matrices, means including a plurality of elements severally operable for effecting the release of matrices from said channels, and means for introducing the released matrices into said assembler; the combination of a vacuum system including a plurality of pneumatically controlled actuating devices severally organized with said operating elements, a tracker plate including a plurality of orifices, a perforate tape normally overlying said orifices, means for advancing said tape over said plate, whereby various orifices are momentarily uncovered by the perforations in said tape, means responsive to such uncovering of the orifices for effecting the automatic operation of said actuating devices, whereby a line of matrices is assembled in said assembler, pneumatic means for automatically moving said assembler from matrix-receiving position into discharge position for cooperation with said transfer carriage, and means for automatically interrupting the advance of tape over said tracker plate while said assembler is in said discharge position.

5. The structure of claim 4, together with means for effecting the automatic return of said assembler to matrix-receiving position in synchronism with the operation of said tape-advancing means.

6. The structure of claim 4, together with means for effecting the automatic return of said assembler to matrix-receiving position when said line of matrices has been removed from the assembler, and automatic means for rendering said tape-advancing means effective again to advance the tape when said pneumatically shifted assembler returns to its matrix-receiving position.

7. A type-casting machine including classified stores of type-matrices, an assembler adapted to receive a line of such matrices, said assembler being movable between matrix-receiving and discharging positions, and a movable transfer carriage for automatically removing the line of matrices from said assembler in discharging position, pneumatic means for automatically moving said assembler into discharging position when a line of matrices has been assembled therein, and pneumatic means coordinated with the movement of said transfer carriage for initiating the automatic return of said assembler to matrix-receiving position when said line of matrices has been removed from the assembler.

8. In a type-casting machine including an assembler, stores of type-matrices, space-bands, and auxiliary "spaces", a plurality of operating elements severally adapted to effect the individual removal of matrices, space-bands and auxiliary "spaces" from said stores, and means for introducing the so-removed members to said assembler; the combination of a plurality of actuating devices severally organized with said operating elements, automatic means for effecting the individual and selective operation of said actuating devices, whereby matrices, space-bands and auxiliary "spaces" are individually introduced in predetermined order into said assembler, and means subject to automatic control for alternately effecting the introduction of paired space-bands and auxiliary spaces into said assembler in predetermined coordination with the introduction of matrices while admitting of said individual introduction of auxiliary "spaces."

9. In a type-casting machine including an assembler, stores of type-matrices, space-bands, and auxiliary "spaces", a plurality of operating elements severally adapted to effect the individual removal of matrices, space-bands and auxiliary "spaces" from said stores, and means for introducing the so-removed members to said assembler; the combination of a plurality of actuating devices severally organized with said operating elements, a tracker plate including a plurality of orifices, means for feeding a perforate tape over said tracker plate, whereby said orifices are selectively vented by the perforations in said tape, means automatically responsive to such venting of said orifices for controlling the individual operation of said actuating devices, whereby matrices, space-bands and auxiliary "spaces" are individually introduced in predetermined order into said assembler, and normally ineffective means which are adapted occasionally to be rendered effective for automatically introducing paired space-bands and auxiliary "spaces" at predetermined points in the line of individually introduced matrices, thereby effecting automatic "hand spacing", as described.

10. The structure of claim 9, in which the normally ineffective means for automatically "hand spacing" comprise a pneumatic element, and said tracker plate includes a particular orifice which, when vented, operates said pneumatic element, to hold said "hand spacing" means effective until released.

11. The structure of claim 9, in which the normally ineffective means for automatically "hand spacing" are subject to the venting of a particular orifice which is disposed in trailing relation to the first-mentioned orifices in said tracker plate.

12. The structure of claim 9, in which the normally ineffective means for automatically "hand spacing" comprise a pneumatic element, and said tracker plate includes a trailing orifice which, when vented, operates said pneumatic element, whereby said "hand spacing" means are held effective for a predetermined interval, and means responsive to a leading orifice in said tracker plate for restoring said "hand spacing" means to normal condition.

13. In a type-casting machine including an assembler, and means for introducing type-matrices, space-bands and auxiliary "spaces" into said assembler, the combination of means for automatically and selectively controlling said first-mentioned means, and automatic means adapted to be rendered effective for introducing space-bands and auxiliary "spaces" in pairs at predetermined points in a line of matrices being assembled in said assembler while admitting of the automatic introduction of space-bands and auxiliary "spaces" individually at other points in said line.

14. In a type-casting machine including a plurality of magazine channels for the classified storage of type-matrices, a plurality of operating elements severally organized with said channels for effecting the individual release of matrices therefrom, the combination of a plurality of manifolds, a plurality of pneumatic actuating devices organized with each manifold, and the actuating devices of the several manifolds being severally connected to said operating elements, each actuating device having a control tube, means for exhausting said manifolds, manifold vent tubes for selectively controlling said last-mentioned means, means organized with each actuating device and being responsive to the venting of its

control tube, while its associated manifold is exhausted, for operating said device and thereby effecting a matrix-releasing operation of the operating element organized therewith, the control tubes of the actuating devices of said manifolds being interconnected in groups including each a control tube of one actuating device of each manifold, whereby a maximum number of actuating devices may be controlled by a minimum number of vent and control tubes, as described.

15. In a type-casting machine including an assembler, a classified store of type matrices, means including a plurality of elements severally operable for effecting the selective assembly of matrices in said assembler; the combination of a vacuum chest, a plurality of pneumatic actuating devices severally organized with said operating elements, a tracker plate, and pneumatic means responsive to the passage of tape over said tracker plate for selectively subjecting said devices to the influence of said chest.

16. A type-casting machine including a classified store of type matrices, an assembler adapted to receive a line of such matrices, pneumatic means for automatically elevating said assembler upon the assembly of a line of matrices therein, a transfer carriage for removing the line from the elevated assembler, and pneumatic means responsive to the movement of said transfer carriage for automatically controlling the return of said assembler to normal position.

17. A type-casting machine including a classified store of type matrices, an assembler movable between matrix-receiving and matrix-discharging positions, means for removing matrices from said assembler, and pneumatic means responsive to the movement of said last-mentioned means for automatically effecting the movement of said assembler from matrix-discharging to matrix-receiving position.

18. A type-casting machine including a classified store of type matrices, an assembler movable between matrix-receiving and matrix-discharging positions, a travelling control element, means responsive to said control element for automatically assembling matrices in said assembler, pneumatic means responsive to said travelling control element for shifting said assembler into matrix-discharging position, means for interrupting the travel of said control element, a transfer carriage for removing matrices from said assembler, pneumatic means responsive to the movement of said transfer carriage for restoring said assembler to matrix-receiving position, and means responsive to the movement of said assembler into matrix-receiving position for restoring said control element to travelling operation.

19. A composing machine including a classified store of type members, an assembler movable between type-receiving and type-discharging positions, a travelling control element, means responsive to said control element for moving said assembler into type-discharging position, and pneumatically controlled means for automatically intermitting the travel of said control element, and pneumatically controlled means responsive to the movement of said assembler for automatically restoring said control element to travelling operation.

20. In a composing machine including means for automatically assembling a line of type matrices, space-bands, and auxiliary "spaces," the combination of a tape, means for effecting travel of said tape, and means cooperating with said travelling tape for controlling said automatic operation of the composing machine, a series of perforations formed in said tape for controlling the automatic assembly of type matrices, and a perforation formed in said tape subsequently to said first-mentioned perforations for controlling the introduction of grouped space-bands and auxiliary "spaces" at predetermined points throughout said line.

21. In a composing machine including means for automatically assembling a line of type matrices, space-bands, and auxiliary "spaces," the combination of a tape, means for effecting travel of said tape, and means cooperating with said travelling tape for controlling said automatic operation of the composing machine, a series of perforations formed in said tape for controlling the automatic assembly of type matrices, and a perforation formed in said tape subsequently to said first-mentioned perforations for controlling the introduction of grouped space-bands and auxiliary "spaces" at predetermined points throughout said line, while admitting of the individual introduction of auxiliary "spaces" under the control of said tape, as described.

22. In a composing machine including means for automatically assembling a line of type matrices, space-bands, and auxiliary "spaces," the combination of a tape, means for effecting travel of said tape, and means cooperating with said travelling tape for controlling said automatic operation of the composing machine, said tape including a series of perforations for controlling the automatic assembly of type matrices, and a trailing perforation for controlling the introduction of grouped space-bands and auxiliary "spaces" in the assembly of type matrices controlled by the preceding series of perforations.

23. In a composing machine including means for automatically assembling a line of type matrices, space-bands, and auxiliary "spaces," the combination of a tape, means for effecting travel of said tape, and means cooperating with said travelling tape for controlling said automatic operation of the composing machine, said tape including a series of perforations for controlling the automatic assembly of type matrices, and a trailing perforation for controlling the introduction of grouped space-bands and auxiliary "spaces" in the assembly of type matrices controlled by the preceding series of perforations, while admitting of the individual introduction of auxiliary "spaces" under the control of said tape, as described.

24. In a composing machine including means for automatically assembling a line of type matrices, space-bands, and auxiliary "spaces," the combination of a tape, means for effecting travel of said tape, and means cooperating with said travelling tape for controlling said automatic operation of the composing machine, said tape including a series of perforations for controlling the automatic assembly of type matrices, means for effecting the automatic introduction of grouped space-bands and auxiliary "spaces" at predetermined points in said line, a perforation trailing said series of perforations in said tape, means spaced apart in the direction of travel of said tape and cooperating with said trailing perforation in controlling said last-mentioned means.

EDWARD L. MELLINGER.
ORRELL R. HERWICK.