(12) INTERNATIONAL APPLICATION PUBLISHED UNDER THE PATENT COOPERATION TREATY (PCT)

(19) World Intellectual Property Organization
International Bureau

(43) International Publication Date
22 August 2013 (22.08.2013)

WIPO | PCT

(10) International Publication Number
WO 2013/121111 A1

(51) International Patent Classification:
F15B 11/042 (2006.01) *F02D 9/10* (2006.01)
F02B 37/18 (2006.01) *F02D 41/00* (2006.01)

(21) International Application Number:
PCT/FI2013/050167

(22) International Filing Date:
14 February 2013 (14.02.2013)

(25) Filing Language: English

(26) Publication Language: English

(30) Priority Data:
20125180 16 February 2012 (16.02.2012) FI

(71) Applicant: **WÄRTSILÄ FINLAND OY** [FI/FI]; Tarhaajantie 2, FI-65380 Vaasa (FI).

(72) Inventor: **NYNÄS, Håkan**; Nyängsvägen 3 B 2, FI-65280 Vaasa (FI).

(74) Agent: **GENIP OY**; Heikinkatu 7, FI-48100 Kotka (FI).

(81) Designated States *(unless otherwise indicated, for every kind of national protection available)*: AE, AG, AL, AM, AO, AT, AU, AZ, BA, BB, BG, BH, BN, BR, BW, BY, BZ, CA, CH, CL, CN, CO, CR, CU, CZ, DE, DK, DM, DO, DZ, EC, EE, EG, ES, FI, GB, GD, GE, GH, GM, GT, HN, HR, HU, ID, IL, IN, IS, JP, KE, KG, KM, KN, KP, KR, KZ, LA, LC, LK, LR, LS, LT, LU, LY, MA, MD, ME, MG, MK, MN, MW, MX, MY, MZ, NA, NG, NI, NO, NZ, OM, PA, PE, PG, PH, PL, PT, QA, RO, RS, RU, RW, SC, SD, SE, SG, SK, SL, SM, ST, SV, SY, TH, TJ, TM, TN, TR, TT, TZ, UA, UG, US, UZ, VC, VN, ZA, ZM, ZW.

(84) Designated States *(unless otherwise indicated, for every kind of regional protection available)*: ARIPO (BW, GH, GM, KE, LR, LS, MW, MZ, NA, RW, SD, SL, SZ, TZ, UG, ZM, ZW), Eurasian (AM, AZ, BY, KG, KZ, RU, TJ, TM), European (AL, AT, BE, BG, CH, CY, CZ, DE, DK, EE, ES, FI, FR, GB, GR, HR, HU, IE, IS, IT, LT, LU, LV, MC, MK, MT, NL, NO, PL, PT, RO, RS, SE, SI, SK, SM, TR), OAPI (BF, BJ, CF, CG, CI, CM, GA, GN, GQ, GW, ML, MR, NE, SN, TD, TG).

Declarations under Rule 4.17:

— *as to applicant's entitlement to apply for and be granted a patent (Rule 4.17(ii))*

— *as to the applicant's entitlement to claim the priority of the earlier application (Rule 4.17(iii))*

Published:

— *with international search report (Art. 21(3))*

(54) **Title**: A VALVE ARRANGEMENT FOR CONTROLLING GAS FLOW IN A TURBOCHARGED INTERNAL COMBUSTION PISTON ENGINE, A WASTE GATE FOR A TURBOCHARGER UNIT AND METHOD OF CONTROLLING GAS FLOW BY-PASSING A TURBINE SECTION OF THE TURBOCHARGER UNIT

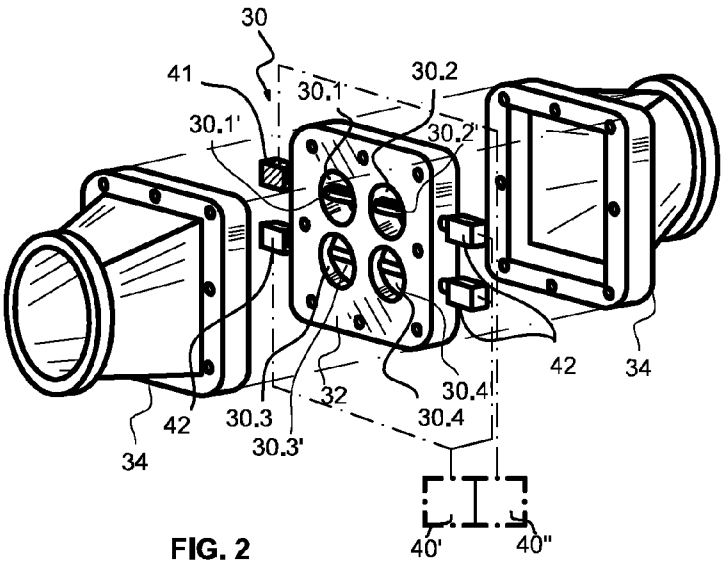

FIG. 2

(57) **Abstract**: Invention relates to a valve arrangement (30) for controlling gas flow in a turbocharged internal combustion piston engine (12) comprising at least two parallel valve units (30.1...30.N), characterized in that a first group of the parallel valve units (30.1) is provided with a continuously variable flow controlling system (40') and a second group of the parallel valve units (30.2...30.N)) are provided with digital flow controlling system (40'). Invention relates also to a waste gate for a turbocharger unit (14) and method of controlling gas flow by-passing a turbine section of the turbocharger unit (14).

WO 2013/121111 A1

A valve arrangement for controlling gas flow in a turbocharged internal combustion piston engine, a waste gate for a turbocharger unit and method of controlling gas flow by-passing a turbine section of the turbocharger unit

Technical field

[001] The present invention relates to a valve arrangement for controlling gas flow in a turbocharged internal combustion piston engine comprising at least two parallel valve units.

[002] The present invention relates to a waste gate for a turbocharger unit comprising a valve arrangement and method of controlling gas flow by-passing a turbine section of the turbocharger unit.

Background art

[003] The operational requirements of combustion engines are becoming more and more demanding and thus the accuracy and reliability of control systems is ever more important. An extremely important fluid flow system in connection with an internal combustion piston engine is the charge air – exhaust gas flow system i.e. the engine gas exchange system. In the efficiently operating internal combustion piston engines, it is almost a rule to use air compressors, typically turbochargers, in connection with the engines. In order to operate the engine properly and efficiently over a wide load range means to control of the gas flow is need at least to some extent. Therefore the turbo charger is often provided with a so called waste gate. The waste gate is a by-pass channel over the turbine part of the turbocharger through which a controllable amount of exhaust gas may be led

without performing work in the turbine part. The waste gate is typically provided with a mechanical valve, the opening/closure of which is depending of the charge air pressure or the engine load. The valve is operating in a very harsh environment, where it is exposed to temperatures of several hundreds of Celsius degrees in exhaust gases flowing at very high velocities. Also in transient load stages the control on the turbocharger has considerable impact on the engine performance.

[004] Different kinds of valve systems are disclosed in the following publications.

[005] JP58197429 A shows a valve arrangement for controlling gas flow in a turbocharged internal combustion piston engine comprising at least two parallel valve units, in which a first group of the parallel valve units is provided with a continuously variable flow controlling system. There is also another valve arrangement which is an on-off valve responsive to the rotational speed of the engine, so that when the speed of the engine exceeds its permissible limit the valve opens, and exhaust gas flows to a bypass and supercharge action by an exhaust turbine is stopped.

[006] JP60230514 A shows a waste gate having one valve member which is controlled by an actuator operated by a diaphragm, which is in turn responsive to the compression pressure of the turbocharger. The valve that controls the connection of the compression pressure to the diaphragm operates in response to the pressure. Additionally there is a solenoid valve which is arranged to open the connection of the compression pressure to the diaphragm which causes opening of the waste gate. The solenoid valve is actuated in response to exhaust gas temperature. The valve that controls the connection of the compression pressure to the diaphragm does not control gas flow but transmitting of the pressure effect to the diaphragm.

[007] US4656834 A shows a waste gate valve having one valve member which opens in response to the pressure of the exhaust gas against a bias

of a spring. There is also an electronic control means responsive to an electronic control signal which acts as a brake for holding the waste gate valve in its present position.

[008] KR20010061233 A shows a waste gate valve having one valve member. The valve member is controlled by means of inlet air pressure and a vacuum source through a diaphragm.

[009] EP0137282 A2 discloses an EGR –system for controlling the amount of exhaust gas recirculation flow between an exhaust gas conduit and the intake manifold. There is a plurality of solenoid actuated valves situated in a conduit linking the exhaust gas system and the intake manifold. There is also disclosed a method comprising energizing a particular one or group of said solenoid responsive valves in a predetermined order such that the composite flow through said orifices is achieved.

[0010] An object of the invention is to provide a valve arrangement for controlling gas flow in a turbocharged internal combustion piston engine which provides better flow control characteristics and more reliable operation than prior art valve arrangements.

[0011] It is also an object of the invention to provide a waste gate for a turbocharger unit for controlling exhaust gas flow in a turbocharged internal combustion piston engine which provides better control characteristics for turbocharger operation and more reliable operation than prior art waste gates.

[0012] It is further an object of the invention to provide a method of controlling gas flow by-passing a turbine section of the turbocharger unit which provides better control characteristics for turbocharger operation and more reliable operation than prior art waste gates.

Disclosure of the Invention

[0013] The objects of the invention are substantially met by a valve arrangement for controlling gas flow in a turbocharged internal combustion piston engine comprising a first group of parallel valve units and a second group of parallel valve units, in which the second group of the parallel valve units comprises at least two valve members and it is provided with digital flow controlling system. It is characteristic to the invention that the first group of the parallel valve units is provided with a continuously variable flow controlling system, and that a control unit is arranged to control the operation of the first and the second group of valve units.

[0014] According to an embodiment of the invention a first group of the parallel valve units is provided with a continuously variable valve positioning system and a second group of the parallel valve units are provided with digital valve positioning system.

[0015] According to another embodiment of the invention the valve units are arranged into a common valve body.

[0016] According to another embodiment of the invention the valve body is a plate-like structure.

[0017] According to an embodiment of the invention a valve body of the valve arrangement is arranged between a first connecting member with extending cross sectional area in the gas flow direction and a second connecting member with constricting cross sectional area in the gas flow direction.

[0018] According to an embodiment of the invention that the first connecting member and the second connecting member are of identical form.

[0019] According to an embodiment of the invention that valve units comprise butterfly valves.

[0020] According to an embodiment of the invention that all valve units are of similar size.

[0021] According to an embodiment of the invention that the valve units of the second group are of increasing size multiplied in sequence of powers of two.

[0022] According to an embodiment of the invention the first group of the parallel valve units consist of one valve unit.

[0023] The objects of the invention are substantially met by a waste gate for a turbocharger unit comprising a valve arrangement having a first group of parallel valve units and a second group of parallel valve units, in which the second group of the parallel valve units comprises at least two valve members and it is provided with digital flow controlling system and in which the first group of the parallel valve units is provided with a continuously variable flow controlling system, and that a control unit is arranged to control the operation of the first and the second group of valve units.

[0024] According to a preferred embodiment of the invention all the valve units of the valve arrangement are arranged to be controlled responsive to a same control signal by the control unit. The same control signal used as control signal for both continuously variable valve positioning system and a digital flow controlling system.

[0025] Such a control signal may be based on single measurement value of the engine's operation, or it may be generated by utilizing a number of measurements.

[0026] The objects of the invention are substantially met by a method of controlling gas flow by-passing a turbine section of the turbocharger unit in which a valve arrangement comprising a first group of parallel valve units and a second group of parallel valve units of three or more parallel valve units is arranged in a conduit connecting an upstream and downstream side of a turbine section, comprising steps of controlling a second group of the valve units comprising at least two parallel valve members in on-off manner, controlling a position of a first group of valve units to have a continuously variable position and the operation of the first and the second group of valve units is controlled by a control unit.

[0027] According to an embodiment of the invention after the valve arrangement being totally closed the smallest flow area is controlled by the one valve unit to have a continuously variable position.

[0028] According to an embodiment of the invention in case the first group of valve units is 100% open and gas flow by-passing the turbine section is to be increased, at least one of the valve units of the second group is changed to on-state, and the first group of valve units controlled in continuously variable manner to fine tune the total opening area of the valve arrangement.

[0029] According to an embodiment of the invention the selection of on-off operated valve units of the second group is performed so that a relative area being nearest lower area to the actual desired relative area is achieved and the a valve unit of the first group is set to a desired position in continuously variable manner to compensate the difference between the nearest lower area and the actual desired relative area.

[0030] According to a preferred embodiment of the invention all the valve units of the valve arrangement are controlled responsive to a same control

signal. The same control signal used as control signal for both continuously variable valve positioning system and a digital flow controlling system.

[0031] According to an embodiment of the invention the first group of valve units is 100% open and gas flow by-passing the turbine section is to be increased, at least one of the valve units of the second group is changed to on-state, and the first group of valve units controlled in continuously variable manner to fine tune the total opening area of the valve arrangement.

[0032] A combination of both analogue and digital valves provides a smooth control curve with very few valves. The movement of the analogue valve is bigger and more continuous, which minimizes the risk of sticking.

Brief Description of Drawings

[0033] In the following, the invention will be described with reference to the accompanying exemplary, schematic drawings, in which

Figure 1 illustrates a gas flow system in an internal combustion piston engine according to an embodiment of the invention,

Figure 2 illustrates a valve arrangement according to an embodiment of the invention,

Figure 3 illustrates a method of operating the valve arrangement according to an embodiment of the invention, and

Figure 4 illustrates a method of operating the valve arrangement according to another embodiment of the invention.

Detailed Description of Drawings

[0034] In figure 1 there is schematically shown a gas flow system 10 in an internal combustion piston engine 12 according to an embodiment of the

invention. The internal combustion piston engine 12 includes a turbocharger unit 14 with a compressor part 16 and a turbine part 18.

[0035] The gas flow system 10 of includes a main gas channel which in this embodiment includes an exhaust gas conduit 20 and an inlet gas conduit 30. The exhaust gas conduit 20 is at its first end in connection with the exhaust manifold 24 of the engine and further with the cylinders 26 of the engine. In the cylinders the pressure and temperature of the exhaust gases is increased by means of combustion of fuel in the cylinders of the engine. The engine is provided with a turbocharger unit 14. The exhaust gas conduit is connected at its second end to the inlet of the turbine part 18 of the turbocharger unit 14 in which turbine part energy of the exhaust gas is partially used for driving the compressor part 16. The compressor part 16 is connected to an inlet manifold 28 of the engine by the inlet gas conduit 30. The turbocharger unit 14 may be of a type known as such. The gas flow system, particularly the turbocharger unit 18 is provided with a bypass channel 20', which connects the engine's exhaust manifold 24 to the outlet side of the turbocharger unit, particularly the turbine part 18 thereof.

[0036] The exhaust gas conduit 20 is provided with a valve arrangement 30 for controlling gas flow in the exhaust gas conduit 20 and the gas flow system. The valve arrangement is arranged upstream the turbine part 18. The valve arrangement 30 controls the flow of exhaust gas to the turbine part 18 and/or passing by the turbine part via the bypass channel 20'. Thus the valve arrangement 30 in the embodiment of figure 1 is, and operates as a waste gate of the turbo charger unit 14. The valve arrangement 30 i.e. the waste gate comprises at least two, preferably three or more parallel valve units 30.1, ... 30.N. There is a control unit 40 arranged to control the operation of the valve arrangement. The control unit 40 comprises a continuously variable valve positioning system 40' and a digital flow controlling system 40". Control unit 40 receives one or more measurement value 41 of the engine's operation. According to a preferred embodiment of the invention all

the valve units 30.1 ...30.N of the valve arrangement are arranged to be controlled responsive to a same control signal by the control unit 40. The same control signal is used as control signal for both continuously variable valve positioning system 40'' and a digital flow controlling system 40'.

[0037] Such a control signal may be based on single measurement value of the engine's operation, or it may be generated by utilizing a number of measurements.

[0038] Thus a combined state of all valve units of the valve arrangement is a combination of at least two digitally controlled on-off valve units and at least one valve unit controlled in continuously variable manner.

[0039] The valve arrangement 30 is provided with at least two groups of parallel valve units in respect to the gas flow. At least one group of the at least two groups is operationally different from the others. According to the invention the first group of the parallel valve units is provided with a continuously variable flow controlling system and a second group of the parallel valve units is provided with digital flow controlling system.

[0040] The continuously variable flow controlling system comprises at least one valve member 30.1, 30.1' (fig.2) and a continuously variable valve positioning system 40''. The digital flow controlling system comprises at least two valve members 30.2 – 30.N and a digital i.e. on-off valve positioning system 40'.

[0041] According to an embodiment of the invention the valve members of the valve units in the first group are physically substantially different to the valve members of the valve units in the second group of the valve units. In this embodiment the continuously variable flow controlling system comprises a continuously variable valve positioning system 40' which provides the continuously variable operation of the valve units. Respectively, the digital flow controlling system 40'' comprises a digital i.e. on-off valve positioning

system which provides the on-off operation of the valve units. Thus, the valve units are physically substantially identical.

[0042] In other words, in this embodiment the valve members of the different groups are substantially different and operation of the valve arrangement is accomplished by different controlling systems or control systems arranged to operate differently.

[0043] According to another embodiment of the invention the valve members of the valve units are physically substantially identical and the continuously variable flow controlling system 40'' comprises a continuously variable valve positioning system 41 which provides the continuously variable operation of the valve units. Respectively, the digital flow controlling system 40' comprises a digital i.e. on-off valve positioning system 42 which provides the on-off operation of the valve units. In other words, the valve members of different groups are substantially identical and operation of the valve arrangement is accomplished by different controlling systems or control systems arranged to operate differently.

[0044] In figure 2 there is shown an embodiment of the valve arrangement 30 according to an invention which is provided with four valve units 30.1, 30.2, 30.3, 30.4 with valve members therein arranged into a common valve body 32, which is a plate-like structure. The valve members 30.1' – 30.4' are all of disk-valve i.e butterfly type. Additionally in the valve arrangement 30 of figure 2 the valve members of the valve units are physically substantially identical. The butterfly type valve solves the problem of the valves hitting the valve seats such as may be the case with poppet valves. A multi-valve butterfly valve system gives a better control compared to one single big valve.

[0045] Valve body 32 is attached between a first and a second connecting member 34, 34' by means of which the valve body may be connected to the exhaust gas conduit 20 of the engine. The connecting members 34, 34' are

preferably identical at both sides of the valve body 32 which is advantageous in manufacturing point of view. According to the embodiment shown in figure 2 the valve body 32 is arranged between a first connecting member with extending cross sectional area in the gas flow direction and a second connecting member with constricting cross sectional area in the gas flow direction. Thus the connecting members 34, 34' are also transitions members to connect the rectangular valve body to circular exhaust gas conduit 20.

[0046] Figure 3 describes a method of operating the valve arrangement according to an embodiment of the invention. The vertical axis represents relative total opening A of the valve arrangement 30 and the horizontal axis X represents conditions of the valve units. The condition illustrated by reference 51 stands for a situation where all the valve units of the second group are closed. The area 50.1 shows that adjustment of the relative opening between 0 - 25% is practised by the valve unit of the first group in continuously variable manner. In case the open area is desired to be more than 25%, but less than 50%, one valve unit of the second group is fully opened and the valve unit of the first group is closed or set to a desired position in continuously variable manner. This condition is illustrated by the reference 52. Again, the area 50.1 shows that adjustment of the relative opening between 25 - 50% and the area 50.2 shows the fully opened state of the valve unit of a second group. In case an increase the open area is desired to be 50% - 75%, one more valve unit of the second group is fully opened and the valve unit of the first group is closed or set to a desired position in continuously variable manner. This condition is illustrated by the reference 53. Again, the area 50.1 shows that adjustment of the relative opening between 50-75% and the area 50.2 shows the fully opened state of the first valve unit of a second group, and further the area 50.3 shows the fully opened state of the second valve unit of the second group. Moreover, in case an increase the open area is desired to be more than 75% one

more valve unit of the second group is fully opened and the valve unit of the first group is closed or set to a desired position in continuously variable manner. This condition is illustrated by the reference 54. Again, the area 50.1 shows that adjustment of the relative opening between 75-100% and the area 50.2 shows the fully opened state of the valve unit of a second group, and the area 50.3 shows the fully opened state of the second valve unit of the second group, and further the area 50.4 shows the fully opened state of the third valve unit of the second group.

[0047] Thus, in the method the selection of on-off operated valve units of the second group is performed so that a relative area being nearest lower area to the actual desired relative area is achieved and the a valve unit of the first group is set to a desired position in continuously variable manner to compensate the difference between the nearest lower area and the actual desired relative area. A total state or a combined state of all valve units of the valve arrangement is a combination of at least two digitally controlled on-off valve units and at least one valve unit controlled in continuously variable manner.

[0048] In the figure 3 the valve units of the second group are of identical form.

[0049] In the figure 4 the valve units of the second group are of increasing multiplied in sequence of powers of two i.e. having relative areas of 100%, 200%, 400%, etc. Figure 4 describes a method of operating the valve arrangement according to another embodiment of the invention. The vertical axis represents relative total opening of the valve arrangement 30 and the horizontal axis X represents conditions of the valve units. The condition illustrated by reference 51 stands for a situation where all the valve units of the second group are closed. The area 50.1 shows that adjustment of the relative opening between 0 – 12,5% is practised by the valve unit of the first group in continuously variable manner. In case an increase the open area

is desired to be more than 12,5%, but less than 25%, a first valve unit of the second group is fully opened and the valve unit of the first group is closed or set to a desired position in continuously variable manner. This condition is illustrated by the reference 52. The area 50.2 shows the fully opened state of the first valve unit of a second group. In case an increase the open area is desired to be more than 25% a second valve unit of the second group is fully opened and the first valve unit of the second group is closed, and the valve unit of the first group is closed or set to a desired position in continuously variable manner. This condition is illustrated by the reference 53. Again, the area 50.1 shows that adjustment of the relative opening between 25%- 37,5% and the area 50.3 shows the fully opened state of the second valve unit of a second group.

[0050] In case an increase the open area is desired to be 35,5% - 50% the second valve unit of the second group is remained open and a the first valve unit of the second group is fully opened , and the valve unit of the first group is closed or set to a desired position in continuously variable manner. This condition is illustrated by the reference 54.

[0051] Respectively, in case an increase the open area is desired to be 50% - 62,5% the first and the second valve units of the second group are closed and a third valve unit of the second group is fully opened, and the valve unit of the first group is closed or set to a desired position in continuously variable manner. This condition is illustrated by the reference 55. Again, the area 50.1 shows that adjustment of the relative opening between 50- 62,5%.

[0052] Further, in case an increase the open area is desired to be 62,5% - 75% the only first and the third valve units of the second group are set fully open, and the valve unit of the first group is closed or set to a desired position in continuously variable manner. This condition is illustrated by the ref-

erence 56. Again, the area 50.1 shows that adjustment of the relative opening between 62,5%- 75%.

[0053] Further, the open area of 75% - 87,5% is accomplished be setting only the second and the third valve units of the second group fully open, and the valve unit of the first group is closed or set to a desired position in continuously variable manner. This condition is illustrated by the reference 57. The open area of 87,5% - 100% is accomplished be setting the first, the second and the third valve units of the second group fully open, and the valve unit of the first group is closed or set to a desired position in continuously variable manner. This condition is illustrated by the reference 58.

[0054] Thus also in this embodiment the selection of fully opened valve units of the second group is performed so that a relative area being nearest lower one to the actual desired relative area is achieved and the a valve unit of the first group is set to a desired position in continuously variable manner to compensate the difference between the nearest lower area and the actual desired relative area. A total state or a combined state of all valve units of the valve arrangement is a combination of at least two digitally controlled on-off valve units and at least one valve unit controlled in continuously variable manner.

[0055] Basically the smallest area is adjusted by an analogue valve. After its capacity is not enough is the first digital step opened. In other words, the required fine tuning of the opening area is done by the analogue valve.

[0056] While the invention has been described herein by means of examples in connection with what are, at present, considered to be the most preferred embodiments, it is to be understood that the invention is not limited to the disclosed embodiments, but is intended to cover various combinations or modifications of its features, and several other applications included within the scope of the invention, as defined in the appended claims. The

coupling of the valve arrangement to the gas flow system may be mad to a different location and/or different way. The details mentioned in connection with any embodiment above may be used in connection with another embodiment when such combination is technically feasible.

Claims

1. A valve arrangement (30) for controlling gas flow in a turbocharged internal combustion piston engine (12) comprising a first group of parallel valve units and a second group of parallel valve units (30.1 ...30.N), in which the second group of the parallel valve units (30.1 ...30.N) comprises at least two valve members (30.2 ...30.N) and it is provided with digital flow controlling system (40'), **characterized** in that the first group of the parallel valve units is provided with a continuously variable flow controlling system (40''), and that a control unit (40) is arranged to control the operation of the first and the second group of valve units (30.1 ...30.N).

2. A valve arrangement according to claim 1, **characterized** in that all the valve units (30.1 ...30.N) of the valve arrangement are arranged to be controlled responsive to a same control signal by the control unit (40).

3. A valve arrangement according to claim 1, **characterized** in that a first group (30.1) of the parallel valve units is provided with a continuously variable valve positioning system (40'') and a second group of the parallel valve units (30.2 ...30.N) is provided with digital valve positioning system (40').

4. A valve arrangement according to claim 1, **characterized** in that the valve units are arranged into a common valve body (34).

5. A valve arrangement according to claim 4, **characterized** in that valve body (32) is a plate-like structure.

6. A valve arrangement according to claim 4, **characterized** in that valve body is arranged between a first connecting member (34) with extending cross sectional area in the gas flow direction and a second connecting member (34') with constricting cross sectional area in the gas flow direction.

7. A valve arrangement according to claim 4, **characterized** in that the first connecting member (34') and the second connecting member (34') are of identical form.

8. A valve arrangement according to anyone of the preceding claims, **characterized** in that valve units (30.1 ...30.N) are identical.

9. A valve arrangement according to anyone of the preceding claims 1-7, **characterized** in that the valve units of the second group are of increasing area multiplied in sequence of powers of two.

10. A valve arrangement according to claim 1, **characterized** in that the first group of the parallel valve units consist of one valve unit (30.1).

11. A waste gate for a turbocharger unit comprising a valve arrangement according to anyone of the preceding claims 1-10.

12. Method of controlling gas flow by-passing a turbine section of the turbocharger unit (14) in which a valve arrangement comprising a first group of parallel valve units (30.1) and a second group of parallel valve units (30.1 ...30.N) of three or more parallel valve units is arranged in a conduit connecting an upstream and downstream side of a turbine section, comprising steps of controlling a second group of the valve units comprising at least two parallel valve members in on-off manner (40'), **characterized** by steps of controlling a position of a first group of valve units to have a continuously variable position (40') and that the operation of the first and the second group of valve units (30) is controlled by a control unit (40).

13. Method according to claim 12, **characterized** in that all the valve units of the valve arrangement are controlled responsive to a same control signal by the control unit (40) so that the same control signal used as control signal for both continuously variable valve positioning system (40'') and a digital flow controlling system (40').

14. Method according to claim 13, **characterized** in that the control signal may be based on single measurement value of the engine's operation, or it may be generated by utilizing a number of measurements.

15. Method according to claim 13, **characterized** in that the smallest flow area is controlled by one valve unit to have a continuously variable position.

16. Method according to claim 12 or 13, **characterized** in that in case the first group of valve units is 100% open and gas flow by-passing the turbine part (18) is to be increased, at least one of the valve units of the second group is changed to on-state, and the first group of valve units controlled in continuously variable manner to fine tune the total opening area of the valve arrangement.

17. Method according to claim 12 or 13, **characterized** in that the method the selection of on-off operated valve units of the second group is performed so that a relative area being nearest lower area to the actual desired relative area is achieved and the a valve unit of the first group is set to a desired position in continuously variable manner to compensate the difference between the nearest lower area and the actual desired relative area.

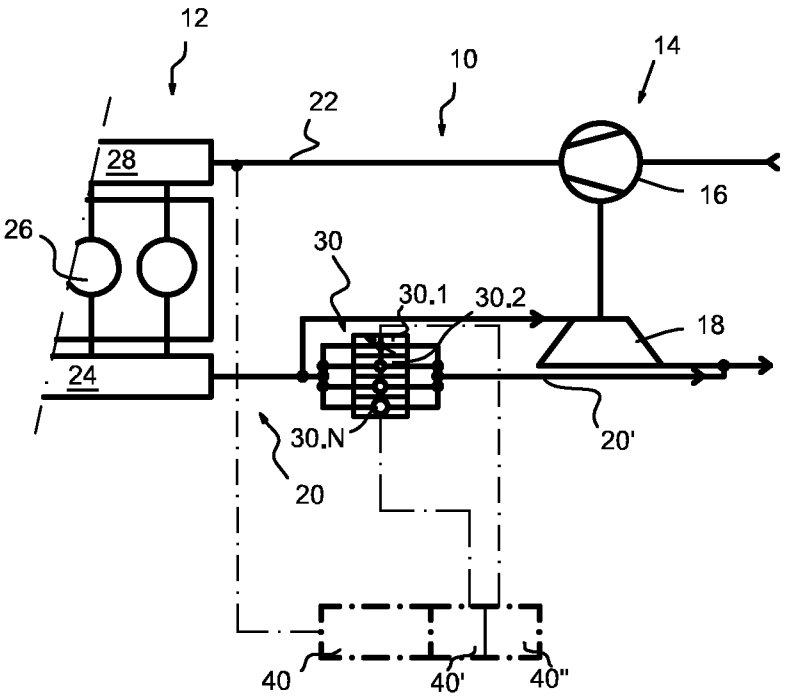
12
10
14
22
28
16
26
30
30.1
30.2
18
24
30.N
20'
20
40
40'
40"

FIG. 1

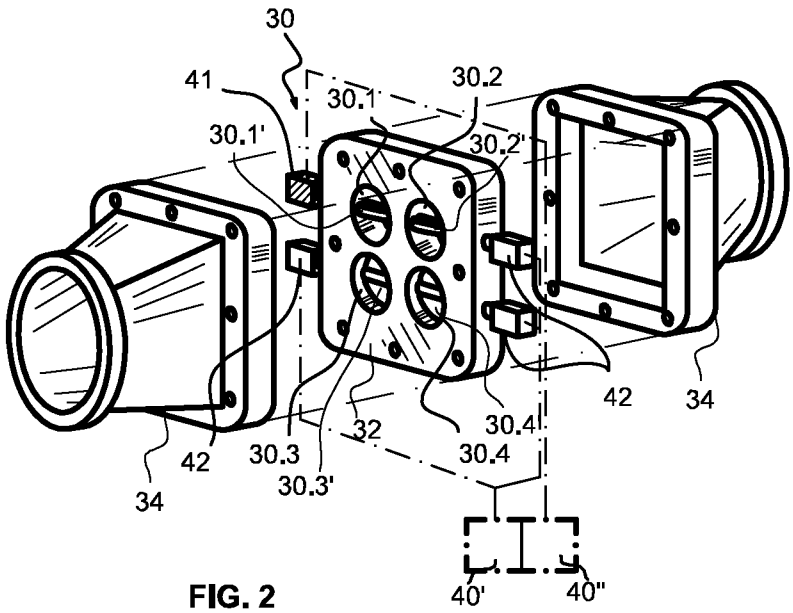
30
41
30.2
30.1
30.1'
30.2'
42
34
32
30.4
30.3
30.4
30.3'
42
34
40'
40"

FIG. 2

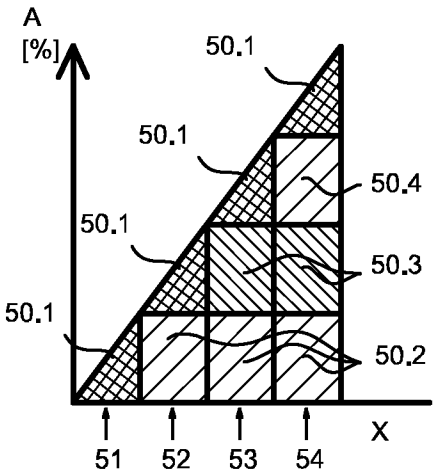
A
[%]
50.1
50.1
50.4
50.1
50.3
50.1
50.2
X
51
52
53
54

FIG. 3

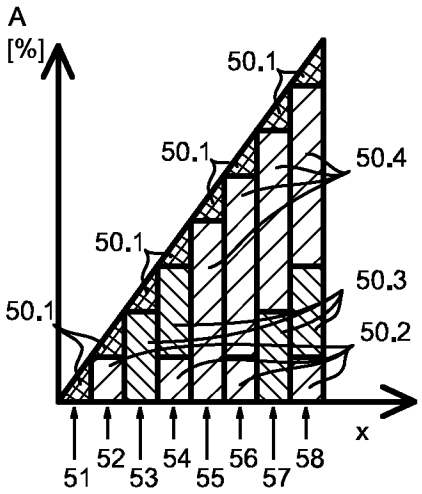
A
[%]
50.1
50.1
50.4
50.1
50.3
50.1
50.2
x
51
52
53
54
55
56
57
58

FIG. 4

INTERNATIONAL SEARCH REPORT

International application No
PCT/FI2013/050167

A. CLASSIFICATION OF SUBJECT MATTER
INV. F15B11/042 F02B37/18 F02D9/10 F02D41/00
ADD.

According to International Patent Classification (IPC) or to both national classification and IPC

B. FIELDS SEARCHED

Minimum documentation searched (classification system followed by classification symbols)
F02B F02D F16K F02M F15B

Documentation searched other than minimum documentation to the extent that such documents are included in the fields searched

Electronic data base consulted during the international search (name of data base and, where practicable, search terms used)
EPO-Internal, WPI Data

C. DOCUMENTS CONSIDERED TO BE RELEVANT

Category*	Citation of document, with indication, where appropriate, of the relevant passages	Relevant to claim No.
X Y	DE 10 2009 052285 A1 (BOSCH GMBH ROBERT [DE]) 12 May 2011 (2011-05-12) paragraphs [0021] - [0024]; figures 1-3	1-3, 10-17 4-9
Y	WO 02/086327 A1 (LINJAMA MATTI [FI]) 31 October 2002 (2002-10-31) page 6, lines 29-33 page 7, lines 9-24 page 10, lines 27-35	4-9
A	FR 2 880 143 A1 (PEUGEOT CITROEN AUTOMOBILES SA [FR]) 30 June 2006 (2006-06-30) the whole document	1-12
A	EP 1 672 197 A1 (BORG WARNER INC [US]) 21 June 2006 (2006-06-21) paragraphs [0047] - [0061]; figure 4	1,12

☐ Further documents are listed in the continuation of Box C.

☒ See patent family annex.

* Special categories of cited documents :

"A" document defining the general state of the art which is not considered to be of particular relevance

"E" earlier application or patent but published on or after the international filing date

"L" document which may throw doubts on priority claim(s) or which is cited to establish the publication date of another citation or other special reason (as specified)

"O" document referring to an oral disclosure, use, exhibition or other means

"P" document published prior to the international filing date but later than the priority date claimed

"T" later document published after the international filing date or priority date and not in conflict with the application but cited to understand the principle or theory underlying the invention

"X" document of particular relevance; the claimed invention cannot be considered novel or cannot be considered to involve an inventive step when the document is taken alone

"Y" document of particular relevance; the claimed invention cannot be considered to involve an inventive step when the document is combined with one or more other such documents, such combination being obvious to a person skilled in the art

"&" document member of the same patent family

Date of the actual completion of the international search	Date of mailing of the international search report
26 April 2013	07/05/2013

Name and mailing address of the ISA/	Authorized officer
European Patent Office, P.B. 5818 Patentlaan 2 NL - 2280 HV Rijswijk Tel. (+31-70) 340-2040, Fax: (+31-70) 340-3016	Nobre Correia, S

1

INTERNATIONAL SEARCH REPORT

Information on patent family members

International application No
PCT/FI2013/050167

Patent document cited in search report	Publication date	Patent family member(s)	Publication date
DE 102009052285 A1	12-05-2011	DE 102009052285 A1	12-05-2011
		FI 20125587 A	30-05-2012
		US 2012286180 A1	15-11-2012
		WO 2011054518 A1	12-05-2011
WO 02086327 A1	31-10-2002	AT 338211 T	15-09-2006
		CA 2483644 A1	31-10-2002
		DE 60214362 T2	13-09-2007
		DK 1386083 T3	08-01-2007
		EP 1386083 A1	04-02-2004
		ES 2271235 T3	16-04-2007
		FI 20010827 A	24-10-2002
		WO 02086327 A1	31-10-2002
FR 2880143 A1	30-06-2006	NONE	
EP 1672197 A1	21-06-2006	DE 202005021914 U1	09-08-2011
		EP 1672197 A1	21-06-2006
		KR 20060067897 A	20-06-2006
		US 2006137343 A1	29-06-2006
		US 2011094222 A1	28-04-2011