(12) INTERNATIONAL APPLICATION PUBLISHED UNDER THE PATENT COOPERATION TREATY (PCT)

(19) World Intellectual Property Organization
International Bureau

(43) International Publication Date
11 August 2016 (11.08.2016)

WIPO | PCT

(10) International Publication Number
WO 2016/126435 A1

(51) International Patent Classification:
G01R 35/00 (2006.01) *G01R 33/032* (2006.01)
G01R 33/02 (2006.01)

(21) International Application Number:
PCT/US2016/014331

(22) International Filing Date:
21 January 2016 (21.01.2016)

(25) Filing Language: English

(26) Publication Language: English

(30) Priority Data:
62/112,079 4 February 2015 (04.02.2015) US
15/003,704 21 January 2016 (21.01.2016) US

(71) Applicant: **LOCKHEED MARTIN CORPORATION** [US/US]; 6801 Rockledge Drive, Bethesda, Maryland 20817 (US).

(72) Inventors: **MANICKAM, Arul**; 6801 Rockledge Drive, Bethesda, Maryland 20817 (US). **KAUP, Peter, G.**; 6801 Rockledge Drive, Bethesda, Maryland 20817 (US). **STETSON, John, B., Jr.**; 6801 Rockledge Drive, Bethesda, Maryland 20817 (US).

(74) Agents: **BILODEAU, Thomas** et al.; Foley & Lardner LLP, 3000 K Street NW, Suite 600, Washington, District of Columbia 20007 (US).

(81) Designated States *(unless otherwise indicated, for every kind of national protection available)*: AE, AG, AL, AM, AO, AT, AU, AZ, BA, BB, BG, BH, BN, BR, BW, BY, BZ, CA, CH, CL, CN, CO, CR, CU, CZ, DE, DK, DM, DO, DZ, EC, EE, EG, ES, FI, GB, GD, GE, GH, GM, GT, HN, HR, HU, ID, IL, IN, IR, IS, JP, KE, KG, KN, KP, KR, KZ, LA, LC, LK, LR, LS, LU, LY, MA, MD, ME, MG, MK, MN, MW, MX, MY, MZ, NA, NG, NI, NO, NZ, OM, PA, PE, PG, PH, PL, PT, QA, RO, RS, RU, RW, SA, SC, SD, SE, SG, SK, SL, SM, ST, SV, SY, TH, TJ, TM, TN, TR, TT, TZ, UA, UG, US, UZ, VC, VN, ZA, ZM, ZW.

(84) Designated States *(unless otherwise indicated, for every kind of regional protection available)*: ARIPO (BW, GH, GM, KE, LR, LS, MW, MZ, NA, RW, SD, SL, ST, SZ, TZ, UG, ZM, ZW), Eurasian (AM, AZ, BY, KG, KZ, RU, TJ, TM), European (AL, AT, BE, BG, CH, CY, CZ, DE, DK, EE, ES, FI, FR, GB, GR, HR, HU, IE, IS, IT, LT, LU, LV, MC, MK, MT, NL, NO, PL, PT, RO, RS, SE, SI, SK, SM, TR), OAPI (BF, BJ, CF, CG, CI, CM, GA, GN, GQ, GW, KM, ML, MR, NE, SN, TD, TG).

Published:
— *with international search report (Art. 21(3))*

(54) Title: APPARATUS AND METHOD FOR ESTIMATING ABSOLUTE AXES' ORIENTATIONS FOR A MAGNETIC DETECTION SYSTEM

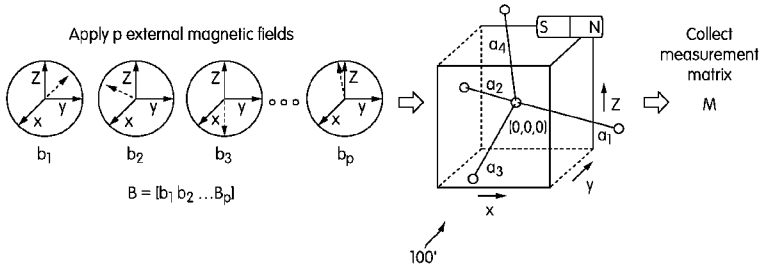

FIG. 10

(57) Abstract: A system for determining an orientation of a nitrogen vacancy (NV) diamond material is disclosed. The system includes the NV diamond material having a plurality of NV centers, a magnetic field generator that generates a magnetic field, a radio frequency (RF) excitation source that provides RF excitation, an optical excitation source that provides optical excitation, an optical detector that receives an optical signal emitted by the NV diamond material, and a controller. The controller controls the magnetic field generator to generate a control magnetic field and controls the magnetic field generator to successively generate calibration magnetic fields. The controller successively receives light detection signals from the optical detector, stores measurement values based on the successively received light detection signals, and calculates an orientation of the NV diamond material based on the stored measurement values.

WO 2016/126435 A1

APPARATUS AND METHOD FOR ESTIMATING ABSOLUTE AXES' ORIENTATIONS FOR A MAGNETIC DETECTION SYSTEM

CROSS-REFERENCE TO RELATED APPLICATIONS

[0001] This application claims the benefit of priority to U.S. Provisional Patent Application No. 62/112,079, filed February 4, 2015, the entire contents of which are incorporated by reference herein in its entirety. This application is related to co-pending U.S. Patent Application filed January 21, 2016, titled "APPARATUS AND METHOD FOR RECOVERY OF THREE DIMENSIONAL MAGNETIC FIELD FROM A MAGNETIC DETECTION SYSTEM" (Atty. Dkt. No. 111423-1046), which is incorporated by reference herein in its entirety.

TECHNICAL FIELD

[0002] The present disclosure generally relates to magnetometers, and more particularly, to apparatuses and methods for estimating orientations of absolute axes for a magnetic detection system.

BACKGROUND

[0003] A number of industrial applications including, but not limited to, medical devices, communication devices, and navigation systems, as well as scientific areas such as physics and chemistry can benefit from magnetic detection and imaging. Many advanced magnetic imaging systems can operate in limited conditions, for example, high vacuum and/or cryogenic temperatures, which can make them inapplicable for imaging applications that require ambient conditions. Furthermore, low cost, small size, weight and power (CSWAP) magnetic sensors of moderate sensitivity, vector accuracy, and bandwidth are valuable in many applications.

[0004] Atomic-sized nitrogen-vacancy (NV) centers in diamond lattices have been shown to have excellent sensitivity for magnetic field measurement and enable fabrication of small magnetic sensors that can readily replace existing-technology (e.g., Hall-effect, SERF, or SQUID) systems and devices. The sensing capabilities of diamond NV (DNV) sensors are maintained in room temperature and atmospheric pressure and these sensors can be even used in

liquid environments (e.g., for biological imaging). Measurement of 3-D vector magnetic fields via (DNV) sensing may be beneficial across a very broad range of applications including communications, geological sensing, two and three dimensional imagery over extended distance, navigation, and attitude determination.

[0005] In order to recover the external magnetic field acting on the diamond NV sensor, the orientation of the axes of the diamond lattice of the sensor system should be known. Currently, methods in establishing the orientation of the axes of the diamond lattice are limited to either pre-manufacturing techniques or visual aid inspection. However, these methods may be time consuming, costly, and/or impractical in some instances. For example, during manufacture of the sensor system, the diamond lattice may be mounted to the sensor in such a way that the orientations of the lattice axes are known and established before use of the sensor system. Such a method requires high accuracy and precision in mounting the diamond lattice to the sensor system and may introduce error during the mounting process. In addition, visual aid inspection, such as X-ray diffraction techniques and the like, may not be feasible in cases where the diamond and/or sensor system is hidden from view.

SUMMARY

[0006] According to certain embodiments, a system for determining an orientation of a nitrogen vacancy diamond material may include a nitrogen vacancy (NV) diamond material comprising a plurality of NV centers, a magnetic field generator configured to generate a magnetic field that is applied to the NV diamond material, a radio frequency (RF) excitation source configured to provide RF excitation to the NV diamond material, an optical excitation source configured to provide optical excitation to the NV diamond material, an optical detector configured to receive an optical signal emitted by the NV diamond material, the optical signal being a fluorescence intensity having a plurality of reduced responses across a frequency range of the RF excitation, and a controller. The controller may be configured to control the magnetic field generator to generate a control magnetic field that separates the plurality of reduced responses in the optical signal emitted by the NV diamond material, and control the magnetic field generator to successively generate a plurality of calibration magnetic fields, each having a predetermined direction. The controller may be further configured to successively receive a

plurality of light detection signals from the optical detector based on the optical signals emitted by the NV diamond material, store a plurality of measurement values based on the successively received plurality of light detection signals, and calculate an orientation of the NV diamond material based on the stored measurement values.

[0007] According to one aspect, a plurality of calibration magnetic fields may consist of three weak magnetic fields.

[0008] According to one aspect, a predetermined direction of one of the three magnetic fields may be orthogonal to the predetermined directions of the other two of the three magnetic fields.

[0009] According to one aspect, predetermined directions of the plurality of calibration magnetic fields may be different from one another.

[0010] According to one aspect, a plurality of calibration magnetic fields may be at least three.

[0011] According to one aspect, a magnetic field generator may comprise a coil, and the controller may be configured to control the coil to generate a magnetic field having a predetermined direction.

[0012] According to one aspect, a magnetic field generator may comprise a plurality of coils. Each of the coils may be configured to generate a magnetic field having a predetermined direction, and each of the predetermined directions may be different from one another.

[0013] According to one aspect, a plurality of coils is three and the plurality of coils may be configured to generate a magnetic field having three directions orthogonal to one another.

[0014] According to one aspect, a controller may calculate the orientation of the NV diamond material relative to a predetermined standard orientation of the NV diamond material.

[0015] According to one aspect, a controller may calculate a rotation and/or reflection of the orientation of the NV diamond material from the predetermined standard orientation of the NV diamond material.

[0016] According to one aspect, a controller may calculate the rotation and/or reflection based on a least squares fit between the stored measurement values and the generated plurality of calibration magnetic fields.

[0017] According to one aspect, a controller may calculate the rotation and/or reflection based on the solution to the Orthogonal Procrustes Problem.

[0018] According to other embodiments, a system for determining an orientation of a nitrogen vacancy diamond material may include a nitrogen vacancy (NV) diamond material comprising a plurality of NV centers, a radio frequency (RF) excitation source configured to provide RF excitation to the NV diamond material, an optical excitation source configured to provide optical excitation to the NV diamond material, and an optical detector configured to receive an optical signal emitted by the NV diamond material, the optical signal being a fluorescence intensity having a plurality of reduced responses across a frequency range of the RF excitation. The system may further include a first magnetic field generator configured to generate a control magnetic field that separates the plurality of reduced responses in the optical signal emitted by the NV diamond material, a second magnetic field generator configured to generate a plurality of calibration magnetic fields, and a controller. The controller may be configured to control the second magnetic field generator to successively generate the plurality of calibration magnetic fields, each having a predetermined direction, successively receive a plurality of light detection signals from the optical detector based on the optical signals emitted by the NV diamond material, store a plurality of measurement values based on the successively received plurality of light detection signals, and calculate an orientation of the NV diamond material based on the stored plurality of measurement values.

[0019] According to one aspect, a first magnetic field generator may be a permanent magnet.

[0020] According to one aspect, a second magnetic field generator may comprise a coil, and the controller may be configured to control the coil to generate a magnetic field having a predetermined direction.

[0021] According to one aspect, a second magnetic field generator may comprise a plurality of coils. Each of the coils may be configured to generate a magnetic field having a predetermined direction.

[0022] According to one aspect, a first magnetic field generator may be affixed to a pivot assembly configured to position the first magnetic field generator to a predetermined orientation such that the first magnetic field generator generates the control magnetic field having a predetermined direction. The controller may be further configured to control the pivot assembly.

[0023] According to one aspect, a second magnetic field generator may be affixed to a pivot assembly configured to position the second magnetic field generator to a predetermined orientation such that the second magnetic field generator generates the control magnetic field having a predetermined direction. The controller may be further configured to control the pivot assembly.

[0024] According to one aspect, a controller may calculate the orientation of the NV diamond material relative to a predetermined standard orientation of the NV diamond material.

[0025] According to one aspect, a controller may calculate a rotation and/or reflection of the orientation of the NV diamond material from the predetermined standard orientation of the NV diamond material.

[0026] According to one aspect, a controller may calculate the rotation and/or reflection based on a least squares fit between the stored measurement values and the generated plurality of calibration magnetic fields.

[0027] According to other embodiments, a system for determining an orientation of a nitrogen vacancy diamond material may include a nitrogen vacancy (NV) diamond material comprising a plurality of NV centers, a radio frequency (RF) excitation source configured to provide RF excitation to the NV diamond material, an optical excitation source configured to provide optical excitation to the NV diamond material, and an optical detector configured to receive an optical signal emitted by the NV diamond material, the optical signal being a fluorescence intensity having a plurality of reduced responses across a frequency range of the RF excitation. The system may further include a first magnetic field generator affixed to a pivot

assembly, the pivot assembly being configured to position the first magnetic field generator to a predetermined orientation such that the first magnetic field generator generates a control magnetic field having a predetermined direction that separates the plurality of reduced responses in the optical signal emitted by the NV diamond material, a second magnetic field generator configured to generate a plurality of calibration magnetic fields, and a controller. The controller may be configured to control the pivot assembly to position the first magnetic field generator to the predetermined orientation to generate the control magnetic field, control the second magnetic field generator to successively generate the plurality of calibration magnetic fields, each having a predetermined direction, successively receive a plurality of light detection signals from the optical detector based on the optical signals emitted by the NV diamond material, store a plurality of measurement values based on the successively received plurality of light detection signals, and calculate an orientation of the NV diamond material based on the stored plurality of measurement values.

[0028] According to other embodiments, a method for determining a lattice orientation of a nitrogen vacancy (NV) diamond material may include generating a control magnetic field applied to the NV diamond material, applying the control magnetic field to the NV diamond material comprising a plurality of NV centers, generating a plurality of calibration magnetic fields, each having a predetermined direction, applying the plurality of calibration magnetic fields to the NV diamond material, receiving a plurality of light detection signals from an optical detector configured to receive a plurality of optical signals emitted by the NV diamond material due to the applied control magnetic field and the plurality of calibration magnetic fields, storing a plurality of measurement values based on the received plurality of light detection signals, and calculating an orientation of the NV diamond material based on the plurality of stored measurement values.

[0029] According to other embodiments, a method for recovering a sign value of measurement values based on a fluorescence intensity having a plurality of reduced responses emitted by a magneto-optical defect center material may include assigning the largest measurement value a first sign value, the first sign value being positive or negative, assigning the second largest measurement value a second sign value, the second sign value being an opposite sign value to the first sign value, assigning the third largest measurement value a third sign value,

the third sign value being an opposite sign value to the first sign value, and assigning the fourth largest measurement value a fourth sign value, the fourth sign value being a sign value such that the sum of the first, second, third, and fourth sign values approach zero.

[0030] According to one aspect, a first sign value may be assigned a positive sign value.

[0031] According to one aspect, a fourth sign value may be assigned a positive sign value.

[0032] According to one aspect, a fourth sign value may be assigned a negative sign value.

[0033] According to other embodiments, a system for determining an orientation of a magneto-optical defect center material may include a magneto-optical defect center material comprising a plurality of defect centers, a magnetic field generator configured to generate a magnetic field, a radio frequency (RF) excitation source configured to provide RF excitation to the magneto-optical defect center material, an optical excitation source configured to provide optical excitation to the magneto-optical defect center material, an optical detector configured to receive an optical signal emitted by the magneto-optical defect center material, the optical signal being a fluorescence intensity having a plurality of reduced responses across a frequency range of the RF excitation, and a controller. The controller may be configured to control the magnetic field generator to generate a control magnetic field that separates the plurality of reduced responses in the optical signal emitted by the magneto-optical defect center material, control the magnetic field generator to successively generate a plurality of calibration magnetic fields, each having a predetermined direction, successively receive a plurality of light detection signals from the optical detector based on the optical signals emitted by the magneto-optical defect center material, store a plurality of measurement values based on the successively received plurality of light detection signals, and calculate an orientation of the magneto-optical defect center material based on the stored measurement values.

[0034] According to one aspect, a magneto-optical defect center material may be a nitrogen vacancy (NV) diamond material.

[0035] According to other embodiments, a system for determining an orientation of a nitrogen vacancy (NV) diamond material comprising a plurality of NV centers may include means for providing radio frequency (RF) excitation to the NV diamond material, means for

receiving an optical signal emitted by the NV diamond material, the optical signal being a fluorescence intensity having a plurality of reduced responses across a frequency range of the RF excitation, means for generating a control magnetic field that separates the plurality of reduced responses in the optical signal emitted by the NV diamond material, means for successively generating a plurality of calibration magnetic fields, each having a predetermined direction, means for successively receiving a plurality of light detection signals based on the optical signals emitted by the NV diamond material, means for storing a plurality of measurement values based on the successively received plurality of light detection signals, and means for calculating an orientation of the NV diamond material based on the stored measurement values.

[0036] According to other embodiments, a system for determining an orientation of a nitrogen vacancy (NV) diamond material may include the NV diamond material comprising a plurality of NV centers, a radio frequency (RF) excitation source configured to provide RF excitation to the NV diamond material, an optical excitation source configured to provide optical excitation to the NV diamond material, an optical detector configured to receive an optical signal emitted by the NV diamond material, the optical signal being a fluorescence intensity having a plurality of reduced responses across a frequency range of the RF excitation, a first magnetic field generator configured to generate a control magnetic field that separates the plurality of reduced responses in the optical signal emitted by the NV diamond material, a second magnetic field generator configured to generate a plurality of calibration magnetic fields, and a controller. The controller may be configured to control the second magnetic field generator to successively generate the plurality of calibration magnetic fields, each having a predetermined direction, successively receive a plurality of light detection signals from the optical detector based on the optical signals emitted by the NV diamond material, store a plurality of measurement values based on the successively received plurality of light detection signals, and calculate a rotation and/or reflection of a predetermined standard orientation of the NV diamond material to an actual orientation of the NV diamond material based on the stored plurality of measurement values.

BRIEF DESCRIPTION OF THE DRAWINGS

[0037] FIG. 1 illustrates one orientation of an NV center in a diamond lattice.

[0038] FIG. 2 is an energy level diagram showing energy levels of spin states for the NV center.

[0039] FIG. 3 is a schematic view illustrating an NV center magnetic sensor system.

[0040] FIG. 4 is a graph illustrating the fluorescence as a function of an applied RF frequency of an NV center along a given direction for a zero magnetic field

[0041] FIG. 5 is a graph illustrating the fluorescence as a function of an applied RF frequency for four different NV center orientations for a non-zero magnetic field.

[0042] FIG. 6 is a schematic diagram illustrating a magnetic field detection system according to an embodiment.

[0043] FIG. 7A is a unit cell diagram of the crystal structure of a diamond lattice having a standard orientation.

[0044] FIG. 7B is a unit cell diagram of the crystal structure of a diamond lattice having an unknown orientation.

[0045] FIG. 8 is a schematic diagram illustrating a step in a method for determining the unknown orientation of the diamond lattice of FIG. 7B.

[0046] FIG. 9 is a flowchart illustrating a sign recovery method for the method for determining the unknown orientation of the diamond lattice of FIG. 7B.

[0047] FIG. 10 is a schematic diagram illustrating a step in the method for determining the unknown orientation of the diamond lattice of FIG. 7B.

DETAILED DESCRIPTION

[0048] The present disclosure relates to apparatuses and methods for accurately estimating the axes' orientation of a diamond lattice used in a magnetic detection system. The process is reduced to a calibration process that may be performed within the system prior to use without the need to perform visual inspection or perform accurate placement of the lattice structure relative to the system. The process may include the application of a bias field that adequately separates

out the frequency responses of the NV diamond produced by optical and RF excitation. Small calibration tests, in the form of weak magnetic fields of varying direction, are then applied to the system to allow the system to calculate a rotation (i.e., a rotation and/or reflection) matrix that rotates and/or reflects a defined orientation of the diamond lattice relative to the coordinate reference frame of the system to an unknown orientation that matches the measurements gathered during the calibration tests.

The NV Center, Its Electronic Structure, and Optical and RF Interaction

[0049] The NV center in a diamond comprises a substitutional nitrogen atom in a lattice site adjacent a carbon vacancy as shown in FIG. 1. The NV center may have four orientations, each corresponding to a different crystallographic orientation of the diamond lattice.

[0050] The NV center may exist in a neutral charge state or a negative charge state. Conventionally, the neutral charge state uses the nomenclature NV^0, while the negative charge state uses the nomenclature NV, which is adopted in this description.

[0051] The NV center has a number of electrons, including three unpaired electrons, each one from the vacancy to a respective of the three carbon atoms adjacent to the vacancy, and a pair of electrons between the nitrogen and the vacancy. The NV center, which is in the negatively charged state, also includes an extra electron.

[0052] The NV center has rotational symmetry, and as shown in FIG. 2, has a ground state, which is a spin triplet with $^3A_2$ symmetry with one spin state $m_s = 0$, and two further spin states $m_s = +1$, and $m_s = -1$. In the absence of an external magnetic field, the $m_s = \pm 1$ energy levels are offset from the $m_s = 0$ due to spin-spin interactions, and the $m_s = \pm 1$ energy levels are degenerate, i.e., they have the same energy. The $m_s = 0$ spin state energy level is split from the $m_s = \pm 1$ energy levels by an energy of 2.87 GHz for a zero external magnetic field.

[0053] Introducing an external magnetic field with a component along the NV axis lifts the degeneracy of the $m_s = \pm 1$ energy levels, splitting the energy levels $m_s = \pm 1$ by an amount $2g\mu_B Bz$, where g is the g-factor, μ_B is the Bohr magneton, and Bz is the component of the external magnetic field along the NV axis. This relationship is correct to a first order and

inclusion of higher order corrections is a straightforward matter and will not affect the computational and logic steps in the systems and methods described below.

[0054] The NV center electronic structure further includes an excited triplet state ^3E with corresponding $m_s = 0$ and $m_s = \pm 1$ spin states. The optical transitions between the ground state $^3A_2$ and the excited triplet ^3E are predominantly spin conserving, meaning that the optical transitions are between initial and final states that have the same spin. For a direct transition between the excited triplet ^3E and the ground state $^3A_2$, a photon of red light is emitted with a photon energy corresponding to the energy difference between the energy levels of the transitions.

[0055] There is, however, an alternative non-radiative decay route from the triplet ^3E to the ground state $^3A_2$ via intermediate electron states, which are thought to be intermediate singlet states A, E with intermediate energy levels. Significantly, the transition rate from the $m_s = \pm 1$ spin states of the excited triplet ^3E to the intermediate energy levels is significantly greater than the transition rate from the $m_s = 0$ spin state of the excited triplet ^3E to the intermediate energy levels. The transition from the singlet states A, E to the ground state triplet $^3A_2$ predominantly decays to the $m_s = 0$ spin state over the $m_s = \pm 1$ spins states. These features of the decay from the excited triplet ^3E state via the intermediate singlet states A, E to the ground state triplet $^3A_2$ allows that if optical excitation is provided to the system, the optical excitation will eventually pump the NV center into the $m_s = 0$ spin state of the ground state $^3A_2$. In this way, the population of the $m_s = 0$ spin state of the ground state $^3A_2$ may be "reset" to a maximum polarization determined by the decay rates from the triplet ^3E to the intermediate singlet states.

[0056] Another feature of the decay is that the fluorescence intensity due to optically stimulating the excited triplet ^3E state is less for the $m_s = \pm 1$ states than for the $m_s = 0$ spin state. This is so because the decay via the intermediate states does not result in a photon emitted in the fluorescence band, and because of the greater probability that the $m_s = \pm 1$ states of the excited triplet ^3E state will decay via the non-radiative decay path. The lower fluorescence intensity for the $m_s = \pm 1$ states than for the $m_s = 0$ spin state allows the fluorescence intensity to be used to determine the spin state. As the population of the $m_s = \pm 1$ states increases relative to the $m_s = 0$ spin, the overall fluorescence intensity will be reduced.

The NV Center, or Magneto-Optical Defect Center, Magnetic Sensor System

[0057] FIG. 3 is a schematic diagram illustrating a conventional NV center magnetic sensor system 300 that uses fluorescence intensity to distinguish the $m_s = \pm 1$ states, and to measure the magnetic field based on the energy difference between the $m_s = +1$ state and the $m_s = -1$ state. The system 300 includes an optical excitation source 310, which directs optical excitation to an NV diamond material 320 with NV centers. The system further includes an RF excitation source 330, which provides RF radiation to the NV diamond material 320. Light from the NV diamond may be directed through an optical filter 350 to an optical detector 340.

[0058] The RF excitation source 330 may be a microwave coil, for example. The RF excitation source 330, when emitting RF radiation with a photon energy resonant with the transition energy between ground $m_s = 0$ spin state and the $m_s = +1$ spin state, excites a transition between those spin states. For such a resonance, the spin state cycles between ground $m_s = 0$ spin state and the $m_s = +1$ spin state, reducing the population in the $m_s = 0$ spin state and reducing the overall fluorescence at resonances. Similarly, resonance occurs between the $m_s = 0$ spin state and the $m_s = -1$ spin state of the ground state when the photon energy of the RF radiation emitted by the RF excitation source is the difference in energies of the $m_s = 0$ spin state and the $m_s = -1$ spin state, or between the $m_s = 0$ spin state and the $m_s = +1$ spin state, there is a decrease in the fluorescence intensity.

[0059] The optical excitation source 310 may be a laser or a light emitting diode, for example, which emits light in the green, for example. The optical excitation source 310 induces fluorescence in the red, which corresponds to an electronic transition from the excited state to the ground state. Light from the NV diamond material 320 is directed through the optical filter 350 to filter out light in the excitation band (in the green, for example), and to pass light in the red fluorescence band, which in turn is detected by the detector 340. The optical excitation light source 310, in addition to exciting fluorescence in the diamond material 320, also serves to reset the population of the $m_s = 0$ spin state of the ground state $^3A_2$ to a maximum polarization, or other desired polarization.

[0060] For continuous wave excitation, the optical excitation source 310 continuously pumps the NV centers, and the RF excitation source 330 sweeps across a frequency range that includes

the zero splitting (when the $m_s = \pm 1$ spin states have the same energy) energy of 2.87 GHz. The fluorescence for an RF sweep corresponding to a diamond material 320 with NV centers aligned along a single direction is shown in FIG. 4 for different magnetic field components Bz along the NV axis, where the energy splitting between the $m_s = -1$ spin state and the $m_s = +1$ spin state increases with Bz. Thus, the component Bz may be determined. Optical excitation schemes other than continuous wave excitation are contemplated, such as excitation schemes involving pulsed optical excitation, and pulsed RF excitation. Examples of pulsed excitation schemes include Ramsey pulse sequence, and spin echo pulse sequence.

[0061] In general, the diamond material 320 will have NV centers aligned along directions of four different orientation classes. FIG. 5 illustrates fluorescence as a function of RF frequency for the case where the diamond material 320 has NV centers aligned along directions of four different orientation classes. In this case, the component Bz along each of the different orientations may be determined. These results, along with the known orientation of crystallographic planes of a diamond lattice, allow not only the magnitude of the external magnetic field to be determined, but also the direction of the magnetic field.

[0062] While FIG. 3 illustrates an NV center magnetic sensor system 300 with NV diamond material 320 with a plurality of NV centers, in general, the magnetic sensor system may instead employ a different magneto-optical defect center material, with a plurality of magneto-optical defect centers. The electronic spin state energies of the magneto-optical defect centers shift with magnetic field, and the optical response, such as fluorescence, for the different spin states is not the same for all of the different spin states. In this way, the magnetic field may be determined based on optical excitation, and possibly RF excitation, in a corresponding way to that described above with NV diamond material.

[0063] FIG. 6 is a schematic diagram of a system 600 for a magnetic field detection system according to an embodiment. The system 600 includes an optical excitation source 610, which directs optical excitation to an NV diamond material 620 with NV centers, or another magneto-optical defect center material with magneto-optical defect centers. An RF excitation source 630 provides RF radiation to the NV diamond material 620.

[0064] As shown in FIG. 6, a first magnetic field generator 670 generates a magnetic field, which is detected at the NV diamond material 620. The first magnetic field generator 670 may be a permanent magnet positioned relative to the NV diamond material 620, which generates a known, uniform magnetic field (e.g., a bias or control magnetic field) to produce a desired fluorescence intensity response from the NV diamond material 620. In some embodiments, a second magnetic field generator 675 may be provided and positioned relative to the NV diamond material 620 to provide an additional bias or control magnetic field. The second magnetic field generator 675 may be configured to generate magnetic fields with orthogonal polarizations. In this regard, the second magnetic field generator 675 may include one or more coils, such as Helmholtz coils. The coils may be configured to provide relatively uniform magnetic fields at the NV diamond material 620 and each may generate a magnetic field having a direction that is orthogonal to the direction of the magnetic field generated by the other coils. In some embodiments, only the first magnetic field generator 670 may be provided to generate the bias magnetic field. Alternatively, only the second magnetic field generator 675 may be provided to generate the bias magnetic field.

[0065] The system 600 further includes a controller 680 arranged to receive a light detection signal from the optical detector 640 and to control the optical excitation source 610, the RF excitation source 630, and the second magnetic field generator 675. The controller may be a single controller, or multiple controllers. For a controller including multiple controllers, each of the controllers may perform different functions, such as controlling different components of the system 600. The second magnetic field generator 675 may be controlled by the controller 680 via an amplifier 660, for example.

[0066] The RF excitation source 630 may be a microwave coil, for example. The RF excitation source 630 is controlled to emit RF radiation with a photon energy resonant with the transition energy between the ground $m_s = 0$ spin state and the $m_s = \pm 1$ spin states as discussed above with respect to FIG. 3.

[0067] The optical excitation source 610 may be a laser or a light emitting diode, for example, which emits light in the green, for example. The optical excitation source 610 induces fluorescence in the red from the NV diamond material 620, where the fluorescence corresponds

to an electronic transition from the excited state to the ground state. Light from the NV diamond material 620 is directed through the optical filter 650 to filter out light in the excitation band (in the green, for example), and to pass light in the red fluorescence band, which in turn is detected by the optical detector 640. The optical excitation light source 610, in addition to exciting fluorescence in the NV diamond material 620, also serves to reset the population of the $m_s = 0$ spin state of the ground state $^3A_2$ to a maximum polarization, or other desired polarization.

[0068] The controller 680 is arranged to receive a light detection signal from the optical detector 640 and to control the optical excitation source 610, the RF excitation source 630, and the second magnetic field generator 675. The controller may include a processor 682 and a memory 684, in order to control the operation of the optical excitation source 610, the RF excitation source 630, and the second magnetic field generator 675. The memory 684, which may include a nontransitory computer readable medium, may store instructions to allow the operation of the optical excitation source 610, the RF excitation source 630, and the second magnetic field generator 675 to be controlled. That is, the controller 680 may be programmed to provide control.

Axes of the Diamond Crystal Lattice

[0069] In deriving the total magnetic field vector impinging on the system 600 from the measurements obtained by the intensity response produced by the NV diamond material 620, it is desirable to establish the orientation of the axes of the diamond lattice of the NV diamond material 620 to allow for the accurate recovery of the magnetic field vector and maximize signal-to-noise information. However, as discussed above, the NV diamond material 620 may be arbitrarily oriented and, thus, have axes in an unknown orientation. Thus, in such a case, the controller 680 may be configured to compute an accurate estimation of the true orientation of the NV diamond lattice, which can be performed on-site as a calibration method prior to use. This information can be subsequently used to accurately recover the full vector information of an unknown external magnetic field acting on the system 600.

[0070] To begin, a desired geospatial coordinate reference frame relative to the system 600 by which measurement of the total magnetic field vector will take place is established. As shown in FIGS. 7A and 7B, a Cartesian reference frame having {x, y, z}orthogonal axes may be

used, but any arbitrary reference frame and orientation may be used. FIG. 7A shows a unit cell 100 of a diamond lattice having a "standard" orientation. The axes of the diamond lattice will fall along four possible directions. Thus, the four axes in a standard orientation relative to the desired coordinate reference frame may be defined as unit vectors corresponding to:

$$\begin{aligned} \boldsymbol{a}_{S,1} &= \frac{1}{\sqrt{3}}[-1 \quad -1 \quad 1]^T \\ \boldsymbol{a}_{S,2} &= \frac{1}{\sqrt{3}}[-1 \quad 1 \quad -1]^T \\ \boldsymbol{a}_{S,3} &= \frac{1}{\sqrt{3}}[1 \quad -1 \quad -1]^T \\ \boldsymbol{a}_{S,4} &= \frac{1}{\sqrt{3}}[1 \quad 1 \quad 1]^T \end{aligned} \tag{1}$$

[0071] For simplicity, the four vectors of equation (1) may be represented by a single matrix $\boldsymbol{A}_S$, which represents the standard orientation of the unit cell 100**:**

$$\boldsymbol{A}_S = \left[\boldsymbol{a}_{S,1} \ \boldsymbol{a}_{S,2} \ \boldsymbol{a}_{S,3} \ \boldsymbol{a}_{S,4}\right] \tag{2}$$

[0072] The angle between axis i and axis j may also be given by the $(i,j)^{th}$ row of the following:

$$\begin{aligned} \cos^{-1}(\boldsymbol{A}_S^T\boldsymbol{A}_S) &= \cos^{-1}\begin{bmatrix} 1 & -\frac{1}{3} & -\frac{1}{3} & -\frac{1}{3} \\ -\frac{1}{3} & 1 & -\frac{1}{3} & -\frac{1}{3} \\ -\frac{1}{3} & -\frac{1}{3} & 1 & -\frac{1}{3} \\ -\frac{1}{3} & -\frac{1}{3} & -\frac{1}{3} & 1 \end{bmatrix} \\ &\approx \begin{bmatrix} 0° & 109.47° & 109.47° & 109.47° \\ 109.47° & 0° & 109.47° & 109.47° \\ 109.47° & 109.47° & 0° & 109.47° \\ 109.47° & 109.47° & 109.47° & 109.47° \end{bmatrix} \end{aligned} \tag{3}$$

[0073] FIG. 7B is a unit cell 100' that represents an arbitrarily placed NV diamond material having unknown axes orientation with respect to the coordinate reference frame. By defining the standard orientation matrix $\boldsymbol{A_S}$ with reference to the established coordinate reference frame, the arbitrary orientation shown in FIG. 7B may be obtained through a rotation and/or reflection of the standard orientation matrix. This can be achieved by applying a transformation matrix $\boldsymbol{R}$, which is defined as a general 3x3 matrix representing the three-dimensional, orthogonal Cartesian space and is, at this stage, unknown. The transformation matrix may be used to obtain our desired matrix $\boldsymbol{A}$ as follows:

$$\boldsymbol{A} = \boldsymbol{R}\boldsymbol{A_S} \tag{4}$$

Deriving the Total Magnetic Field Vector

[0074] As described above with reference to FIGS. 3-5, the total magnetic field acting on the system 600 may be measured fluorescently. These measurements may be modeled as a linear system from which the total magnetic field impinging on the sensor may be determined:

$$\boldsymbol{m} = |\boldsymbol{A}^T\boldsymbol{b} + \boldsymbol{n}| \tag{5}$$

[0075] Here, $\boldsymbol{b} \in \mathbb{R}^{3x1}$ represents the magnetic field vector acting inside the sensor system, expressed in Cartesian coordinates relative to the coordinate reference frame; $\boldsymbol{A}^T\boldsymbol{b}$ represents the projection of the magnetic field vector onto each of the four, arbitrarily-placed NV center diamond lattice axes; $\boldsymbol{n} \in \mathbb{R}^{4x1}$ represents the sensor noise vector; and $\boldsymbol{m} \in \mathbb{R}^{4x1}$ represents the measurement vector, where the i^{th}element represents the estimated projection of the magnetic field onto the sensor axis i. In terms of units, it is assumed that the measurement vector has been converted from the DNV sensor's native units (in terms of microwave resonance frequency) into the units of magnetic field strength. Furthermore, the term $|\boldsymbol{A}^T\boldsymbol{b} + \boldsymbol{n}|$ represents the element-wise absolute value of $\boldsymbol{A}^T\boldsymbol{b} + \boldsymbol{n}$, rather than its determinant.

[0076] Given the linear model for the magnetic field measurement of equation (5) a least squares estimate of the total magnetic field acting on the system 600 may be given by:

$$\widehat{\boldsymbol{b}} = (\boldsymbol{A}^T)^+\boldsymbol{m} \tag{6}$$

[0077] In the above equation, the + superscript denotes the Moore-Penrose pseudoinverse. Because the three four-element columns of $\boldsymbol{A}^T$ are linearly independent, equation (6) may be rewritten as:

$$\begin{aligned}\widehat{\boldsymbol{b}} &= (\boldsymbol{A}\boldsymbol{A}^T)^{-1}\boldsymbol{A}\boldsymbol{m} \\ &= (\boldsymbol{R}\boldsymbol{A}_S\boldsymbol{A}_S^T\boldsymbol{R}^T)^{-1}\boldsymbol{A}\boldsymbol{m} \\ &= \left(\tfrac{4}{3}\boldsymbol{R}\boldsymbol{I}\boldsymbol{R}^T\right)^{-1}\boldsymbol{A}\boldsymbol{m} \\ &= 0.75(\boldsymbol{R}\boldsymbol{R}^T)^{-1}\boldsymbol{A}\boldsymbol{m}\end{aligned} \tag{7}$$

[0078] In equation (7), $\boldsymbol{A}_S{\boldsymbol{A}_S}^T = \frac{4}{3}\boldsymbol{I}$ (established in more detail below) has been substituted. Because $\boldsymbol{R}$ is an orthogonal matrix, equation (7) can be reduced to:

$$\widehat{\boldsymbol{b}} = 0.75(\boldsymbol{I})^{-1}\boldsymbol{A}\boldsymbol{m} = 0.75\boldsymbol{A}\boldsymbol{m} \tag{8}$$

[0079] In equations (7)-(8), it was assumed that all the measurements were weighted equally. If, however, some of the axes have less variance in their measurements or are preferred for other reasons, then different weightings may be used for each of the axes for a more optimal least squares estimate. If $\boldsymbol{w} \in \mathbb{R}^{4x1}$ represents the positive weights for each of the measurements and $\boldsymbol{W} = diag(\boldsymbol{w})$, then the weighted least-squares formulation for the total magnetic field may be written as:

$$\widehat{\boldsymbol{b}} = argmin_{\boldsymbol{b}\in\mathbb{R}^{3x1}} \left\| \boldsymbol{W}^{\frac{1}{2}}\left(\boldsymbol{A}^T\widehat{\boldsymbol{b}} - \boldsymbol{m}\right)\right\|_2 \tag{9}$$

[0080] Based on equation (9), the generalized least squares solution of equation (6) may now be written as:

$$\widehat{\boldsymbol{b}} = \left(\boldsymbol{W}^{\frac{1}{2}}\boldsymbol{A}^T\right)^{+}\boldsymbol{W}^{\frac{1}{2}}\boldsymbol{m} = (\boldsymbol{A}\boldsymbol{W}\boldsymbol{A}^T)^{-1}\boldsymbol{A}\boldsymbol{W}\boldsymbol{m} \tag{10}$$

[0081] For a perfect NV diamond material 620 having no defects (e.g., lattice misalignments, impurities, etc.) and no sensor noise, $\widehat{\boldsymbol{b}}$ should be equal to $\boldsymbol{b}$. However, in an imperfect system, it

is possible to utilize a performance metric to determine the error associated with the measurement. One possible metric that may be used is a 2-norm of the residual vector minimized by the least squares solution. This metric $\boldsymbol{\gamma}$ may be given by:

$$\begin{aligned}\boldsymbol{\gamma} &= \left\|\boldsymbol{A}^T\widehat{\boldsymbol{b}} - \boldsymbol{m}\right\|_2 \\ &= \|\boldsymbol{A}^T(\boldsymbol{A}\boldsymbol{A}^T)^{-1}\boldsymbol{A}\boldsymbol{m} - \boldsymbol{m}\|_2 \\ &= \|(\boldsymbol{A}^T(\boldsymbol{A}\boldsymbol{A}^T)^{-1}\boldsymbol{A} - \boldsymbol{I})\boldsymbol{m}\|_2\end{aligned} \tag{11}$$

[0082] Because the residual vector is proportional to the measurement amplitude, the magnitude of the true magnetic field may be used to normalize the metric to give a consistent metric even in the presence of a changing true magnetic field:

$$\boldsymbol{\gamma}' = \frac{\left\|(\boldsymbol{A}^T(\boldsymbol{A}\boldsymbol{A}^T)^{-1}\boldsymbol{A}-\boldsymbol{I})\boldsymbol{m}\right\|_2}{\|\boldsymbol{b}\|_2} \tag{12}$$

[0083] If the true magnetic field is not known, the measurement vector magnitude may be used to normalize the metric:

$$\boldsymbol{\gamma}'' = \frac{\left\|(\boldsymbol{A}^T(\boldsymbol{A}\boldsymbol{A}^T)^{-1}\boldsymbol{A}-\boldsymbol{I})\boldsymbol{m}\right\|_2}{\|\boldsymbol{m}\|_2} \tag{13}$$

Estimation of Absolute Axes' Orientation in the NV Diamond Material

[0084] By simple substitution of equation (4) into equation (5), the measurement obtained by the system 600 may be represented in terms of the standard orientation matrix:

$$\boldsymbol{m} = |\boldsymbol{A}^T\boldsymbol{b} + \boldsymbol{n}| = |(\boldsymbol{R}\boldsymbol{A}_S)^T\boldsymbol{b} + \boldsymbol{n}| \tag{14}$$

[0085] As described above, a permanent magnet (e.g., the first magnetic field generator 670) and/or coils (e.g., the second magnetic field generator 675) may be used to adequately separate out the Lorentzian dips that correspond to the magnetic field measurements along each diamond axis. However, at this point, the orientations of the sensor's axes are unknown. Thus, the required bias or control magnetic field, defined as $\boldsymbol{b}_{bias}$, that will produce the desired dip separation is unknown.

[0086] As will be described in more detail below, there exists a plurality of $\boldsymbol{b}_{bias}$ vectors that can equally separate out the four Lorentzian dips for adequate measurement purposes. Moreover, for the purposes of determining the unknown orientation of the diamond lattice, it is not necessary to precisely place or apply the bias magnetic field that will result in perfectly equal dip separation, which may be more appropriate during field measurement of an external magnetic field. In this case, any $\boldsymbol{b}_{bias}$ vector that sufficiently separates the four dips may suffice for the determination of the unknown orientation of the diamond lattice, thus increasing the viable $\boldsymbol{b}_{bias}$vectors appropriate for this step. Sufficient spectral dip separation, however, may depend on the width of the dips and the planned magnitude of the calibration magnetic fields (described below). The width of the dips varies, depending on diamond composition and sensor laser and/or RF excitation mechanisms. Based on the resulting widths due to inherent sensor characteristics, the magnitude and orientation should be sufficient to ensure that the anticipated maximum spectral shifts that will occur due to the calibration tests will maintain sufficient separation between neighboring Lorentzian dips.

[0087] FIG. 8 shows a step for determining a viable $\boldsymbol{b}_{bias}$ vector field. As shown in FIG. 8, the first magnetic field generator 670 may be arbitrarily placed in one or more positions and/or orientations such that multiple magnetic fields are applied to the diamond having an unknown orientation 100'. Measurements of the fluorescence intensity response are taken for each position and/or orientation of the first magnetic field generator 670. Once a fluorescence intensity response 800 is produced that adequately separates out the four Lorentzian pairs, the position of the first magnetic field generator 670 is maintained and the process may proceed to calibration tests. In other embodiments, the separation process may be performed by the second magnetic field generator 675. In this case, the controller 680 may be configured to control the second magnetic field generator 675 to generate multiple magnetic fields until the desired separation is produced. In yet other embodiments, the first and/or second magnetic field generators may be affixed to a pivot assembly (e.g., a gimbal assembly) that may be controlled to hold and position the first and/or second magnetic field generators to a predetermined and well-controlled set of orientations, thereby establishing the desired Lorentzian separation and/or calibration magnetic fields (described below). In this case, the controller 680 may be configured

to control the pivot assembly having the first and/or second magnetic field generators to position and hold the first and/or second magnetic field generators at the predetermined orientation.

[0088] After an appropriate calibration $\boldsymbol{b}_{bias}$ field has been found that adequately separates out the four Lorentzian dips, a measurement vector $\boldsymbol{m}_{bias}$ of the corresponding bias magnet's magnetic field projections is collected. The measurement vector may be expressed in a similar manner as the linear model described in equation (5):

$$\boldsymbol{m}_{bias} = |\boldsymbol{A}^T\boldsymbol{b}_{bias} + \boldsymbol{n}_{bias}| \tag{15}$$

[0089] As noted above with regard to equation (5), the variables represented in equation (15) are the same, but represented in relation to the applied bias field.

[0090] At this point, it is unknown which of the four Lorentzian dips correspond to which of the sensor axes, which still remain unknown. However, because any possible permutation of the axes' ordering can be captured by applying an appropriate orthogonal matrix to $\boldsymbol{A}_S$, and, because the process described herein is estimating the orthogonal matrix that best represents the data, any permutation of the axes' ordering will be compensated by the transformation. Due to this, the axes may be generally assigned such as, for example, the Lorentzian dip that is closest to the zero-field splitting frequency is assigned as $\boldsymbol{a}_1$, the second-closest is assigned as $\boldsymbol{a}_2$, and so on.

Sign Recovery of Magnetic Field Projections

[0091] Due to the symmetry of the DNV sensor measurements, the obtained $\boldsymbol{m}_{bias}$ vector has no inherent sign information for each of its four components. However, sign information may be recovered using the following process.

[0092] The projections of the magnetic field vector onto the four axes is given by the vector $\boldsymbol{A}^T\boldsymbol{b}$. The sum of the projections may then be initially presumed to equal zero per the following:

$$\sum_{i=1}^{4}(\boldsymbol{A}^T\boldsymbol{b})_i = \sum_{i=1}^{4}((\boldsymbol{R}\boldsymbol{A}_S)^T\boldsymbol{b})_i$$

$$= \sum_{i=1}^{4}\boldsymbol{a}_{S,i}^T\boldsymbol{R}^T\boldsymbol{b}$$

$$= \boldsymbol{b}^T \boldsymbol{R} \sum_{i=1}^{4} \boldsymbol{a}_{S,i} \tag{16}$$

$$= \boldsymbol{b}^T \boldsymbol{R} \boldsymbol{0}$$

$$= 0$$

[0093] In the above equation (16), $\boldsymbol{0} \in \mathbb{R}^{4x1}$ represents a vector consisting of all zeros. If the sum of the elements of a vector $\boldsymbol{x} \in \mathbb{R}^{4x1}$ equals zero, then a magnetic field vector $\boldsymbol{b}$ may be found whose projections onto the four axes of a diamond is identical to $\boldsymbol{x}$. In this regard, the magnetic field vector $\boldsymbol{b}$ may be defined as follow:

$$\boldsymbol{b} = 0.75\, \boldsymbol{A}\boldsymbol{x} \tag{17}$$

[0094] The projection of the magnetic field vector $\boldsymbol{b}$ onto the four axes of a diamond may be given by:

$$\boldsymbol{A}^T \boldsymbol{b} = 0.75 \boldsymbol{A}^T \boldsymbol{A}\boldsymbol{x}$$

$$= 0.75 (\boldsymbol{R}\boldsymbol{A}_S)^T \boldsymbol{R}\boldsymbol{A}_S \boldsymbol{x} \tag{18}$$

$$= 0.75 \boldsymbol{A}_S^T \boldsymbol{R}^T \boldsymbol{R}\boldsymbol{A}_S \boldsymbol{x}$$

$$= 0.75 \boldsymbol{A}_S^T \boldsymbol{A}_S \boldsymbol{x}$$

[0095] The values for the $\boldsymbol{A}_S$ matrix from equations (1)-(2) may be plugged into equation (18) to give:

$$\boldsymbol{A}^T \boldsymbol{b} = \begin{bmatrix} 0.75 & -0.25 & -0.25 & -0.25 \\ -0.25 & 0.75 & -0.25 & -0.25 \\ -0.25 & -0.25 & 0.75 & -0.25 \\ -0.25 & -0.25 & -0.25 & 0.75 \end{bmatrix} \boldsymbol{x}$$

$$= \left(\boldsymbol{I} - 0.25 \begin{bmatrix} 1 & 1 & 1 & 1 \\ 1 & 1 & 1 & 1 \\ 1 & 1 & 1 & 1 \\ 1 & 1 & 1 & 1 \end{bmatrix} \right) \boldsymbol{x} \tag{19}$$

$$= \boldsymbol{x} - 0.25 \begin{bmatrix} \sum_{i=1}^{4} x_i \\ \sum_{i=1}^{4} x_i \\ \sum_{i=1}^{4} x_i \\ \sum_{i=1}^{4} x_i \end{bmatrix}$$

[0096] Because it was initially assumed that the sum of all the elements of $\boldsymbol{x}$ equals 0, equation (19) can be reduced to:

$$\boldsymbol{A}^T\boldsymbol{b} = \boldsymbol{x} - 0.25 \begin{bmatrix} 0 \\ 0 \\ 0 \\ 0 \end{bmatrix} = \boldsymbol{x} \tag{20}$$

[0097] Thus, a $\boldsymbol{b}$ vector exists whose projections onto the axes of a diamond is identical to $\boldsymbol{x}$ and the initial presumption of equation (16) is proved. Accordingly, the sum of the axes' projections of any magnetic field impinging on a diamond will be equal to zero, and measurements obtained, in the absence of noise, will sum to zero as well. Thus, sign information for the bias measurements may be recovered following this basic principle. This particular step is especially applicable if the bias magnetic field's projections are much larger than the expected noise levels.

[0098] With reference to FIG. 9, a method to recover sign information from the bias field measurements according to one embodiment will now be described. First, in a step S10, the largest of the four measurements is arbitrarily set to a sign value, either positive or negative. Once this is chosen, the next steps are dictated based on this sign choice such that the principles of equation (16) are maintained. For example, as shown in the embodiment of FIG. 8, the largest of the four measurements, measurement 810a, is assigned as positive. Next, in a step S11, the second-largest measurement (e.g., measurement 810b shown in FIG. 8) is set to negative. By setting the second-largest measurement to negative, the positive value assigned to the largest measurement may be offset toward zero. In a step S12, the third-largest measurement (e.g.,

measurement 810c of FIG. 8) is assigned a negative sign value. Because, by definition, the second-largest measurement is smaller than the largest measurement, a negative sign value for the third-largest measurement will offset the largest measurement further towards zero. Finally, in a step S13, the smallest measurement is assigned either a positive or negative value that allows for the sum total of the four measurements to approximately equal zero. In FIG. 8, the smallest measurement 810d is assigned a positive value. After this process, therefore, an appropriately signed $\boldsymbol{m}_{bias}$ vector may be obtained.

[0099] After application of the bias field that cleanly separates out the four Lorentzian dips and a measurement of the resulting bias field has been collected, a series of calibration tests may be performed. As shown in FIG. 10, a series of p known external magnetic fields, in conjunction with the fixed $\boldsymbol{b}_{bias}$ field, is applied and the resulting sensor measurements are collected. In some embodiments, a series of at least three p ($p \geq 3$) weak magnetic fields are applied. In particular embodiments, at least three non-coplanar p ($p \geq 3$) weak magnetic fields are applied. In yet other embodiments, three orthogonally spaced p ($p \geq 3$) weak magnetic fields are applied. In particular embodiments, four or more p (i.e., $p \geq 4, 5, ...$) weak magnetic fields are applied. In certain embodiments, the magnitudes of the applied fields are small relative to the bias magnetic field that is applied to separate the Lorentzian responses in frequency and within the dynamic range of the system as defined by the bias magnetic field. In other embodiments, the magnitudes of the applied magnetic fields are large enough to account for errors in the system. In some embodiments, the ranges of strength of the magnetic fields may be from about 0.5 to about 20 micro-Tesla. Such fields may be applied by the second magnetic generator 675 and, thus, controlled by the controller 680. The known applied external magnetic fields may be represented by the following matrix:

$$\boldsymbol{B} = \left[\boldsymbol{b}_1 \ \boldsymbol{b}_2 \ \ldots \ \boldsymbol{b}_p\right] \tag{21}$$

[0100] In equation (21), $\boldsymbol{b}_k$ represents the kth field for $k = 1 \ldots p$. The obtained measurements $\boldsymbol{m}_k$ corresponding to each $\boldsymbol{b}_k$ may be represented by the linear model described above as:

$$\boldsymbol{m}_k = \left|\boldsymbol{A}^T(\boldsymbol{b}_k + \boldsymbol{b}_{bias}) + \boldsymbol{n}_k\right| \tag{22}$$

[0101] The portion of $\boldsymbol{m}_k$ that corresponds solely to the external magnetic field $\boldsymbol{b}_k$ can be isolated, along with proper sign values, by:

$$\tilde{\boldsymbol{m}}_k = (\boldsymbol{m}_k - |\boldsymbol{A}^T\boldsymbol{b}_{bias}|) \circ \text{sgn}(\boldsymbol{A}^T\boldsymbol{b}_{bias}) \tag{23}$$

[0102] In the above equation, $\circ$ represents the Hadamard (i.e., element-wise) matrix product, while sgn( ) represents the element-wise signum function. At this stage, $\boldsymbol{A}^T$ remains unknown. However, $\boldsymbol{A}^T\boldsymbol{b}_{bias}$ may be estimated. This is possible by substituting $\breve{\boldsymbol{m}}_{bias}$ for $\boldsymbol{A}^T\boldsymbol{b}_{bias}$ in equation (23):

$$\tilde{\boldsymbol{m}}_k \approx (\boldsymbol{m}_k - |\breve{\boldsymbol{m}}_{bias}|) \circ \text{sgn}(\breve{\boldsymbol{m}}_{bias}) \tag{24}$$

[0103] Combining equations (22) and (23), the derived calibration measurement can be written as follows:

$$\tilde{\boldsymbol{m}}_k = \boldsymbol{A}^T\boldsymbol{b}_k + \tilde{\boldsymbol{n}}_k \tag{25}$$

[0104] In the above equation (25), $\tilde{\boldsymbol{n}}_k = \boldsymbol{n}_k \circ sgn(\breve{\boldsymbol{m}}_{bias}) + \boldsymbol{n}_{bias}$.

[0105] By defining the matrices $\tilde{\boldsymbol{M}} = [\tilde{\boldsymbol{m}}_1 \ \tilde{\boldsymbol{m}}_2 \ \dots \ \tilde{\boldsymbol{m}}_p]$ and $\tilde{\boldsymbol{N}} = [\tilde{\boldsymbol{n}}_1 \ \tilde{\boldsymbol{n}}_2 \ \dots \ \tilde{\boldsymbol{n}}_p]$, the external magnetic fields and their corresponding measurements may be compactly represented by:

$$\begin{gathered}\boldsymbol{A}^T[\boldsymbol{b}_1 \ \boldsymbol{b}_2 \ \dots \ \boldsymbol{b}_p] + [\tilde{\boldsymbol{n}}_1 \ \tilde{\boldsymbol{n}}_2 \ \dots \ \tilde{\boldsymbol{n}}_p] = [\tilde{\boldsymbol{m}}_1 \ \tilde{\boldsymbol{m}}_2 \ \dots \ \tilde{\boldsymbol{m}}_p] \\ \Rightarrow \boldsymbol{A}^T\boldsymbol{B} + \tilde{\boldsymbol{N}} = \tilde{\boldsymbol{M}} \\ \Rightarrow (\boldsymbol{R}\boldsymbol{A}_S)^T\boldsymbol{B} + \tilde{\boldsymbol{N}} = \tilde{\boldsymbol{M}}\end{gathered} \tag{26}$$

[0106] Once the known $\boldsymbol{B}$ and the measured $\tilde{\boldsymbol{M}}$ have been obtained, equation (26) may be expanded as follows:

$$\begin{gathered}(\boldsymbol{R}\boldsymbol{A}_S)^T\boldsymbol{B} + \tilde{\boldsymbol{N}} = \tilde{\boldsymbol{M}} \\ \Rightarrow \boldsymbol{A}_S{}^T\boldsymbol{R}^T\boldsymbol{B} + \tilde{\boldsymbol{N}} = \tilde{\boldsymbol{M}}\end{gathered}$$

$$\Rightarrow \boldsymbol{A_S A_S}^T \boldsymbol{R}^T \boldsymbol{B} + \boldsymbol{A_S}\widetilde{\boldsymbol{N}} = \boldsymbol{A_S}\widetilde{\boldsymbol{M}} \tag{27}$$

$$\Rightarrow \frac{4}{3}\boldsymbol{I}\boldsymbol{R}^T \boldsymbol{B} + \boldsymbol{A_S}\widetilde{\boldsymbol{N}} = \boldsymbol{A_S}\widetilde{\boldsymbol{M}}$$

$$\Rightarrow \boldsymbol{R}^T \boldsymbol{B} + \frac{3}{4}\boldsymbol{A_S}\widetilde{\boldsymbol{N}} = \frac{3}{4}\boldsymbol{A_S}\widetilde{\boldsymbol{M}}$$

[0107] From equation (19), $\boldsymbol{A_S A_S}^T = \frac{4}{3}\boldsymbol{I}$ was demonstrated and thus substituted into equation (27) above. Because the singular values of $\boldsymbol{A_S}$ are known and equal (i.e., about 1.15), the noise term $\widetilde{\boldsymbol{N}}$ will not be colored or largely amplified in the expression $\frac{3}{4}\boldsymbol{A_S}\widetilde{\boldsymbol{N}}$. Thus, we can treat the expression $\frac{3}{4}\boldsymbol{A_S}\widetilde{\boldsymbol{N}}$ as a new noise term:

$$\widetilde{\widetilde{\boldsymbol{N}}} = \frac{3}{4}\boldsymbol{A_S}\widetilde{\boldsymbol{N}} \tag{28}$$

[0108] Combining equations (27) and (28) results in:

$$\boldsymbol{R}^T \boldsymbol{B} + \widetilde{\widetilde{\boldsymbol{N}}} = \frac{3}{4}\boldsymbol{A_S}\widetilde{\boldsymbol{M}} \tag{29}$$

[0109] Taking the transpose of both sides of equation (29) gives:

$$\boldsymbol{B}^T \boldsymbol{R} + \widetilde{\widetilde{\boldsymbol{N}}}^T = \frac{3}{4}\widetilde{\boldsymbol{M}}^T \boldsymbol{A_S}^T \tag{30}$$

[0110] In the next step, an orthogonal matrix $\widehat{\boldsymbol{R}}$ is desired that provides the least-squares fit between $\boldsymbol{B}^T$ and $\frac{3}{4}\widetilde{\boldsymbol{M}}^T \boldsymbol{A_S}^T$ in equation (30). Some least-squares formulations may introduce translation and/or angular error into the orthogonal matrix $\widehat{\boldsymbol{R}}$. For example, error may be introduced when applying the matrix $\widehat{\boldsymbol{R}}$ to the standard orientation matrix $\boldsymbol{A_S}$ in the form of a translation of the center of the axes from the standard orientation to the estimated orientation or in a change in the angles shown in equation (3) between given axes. Thus, a least-squares fit that can substantially maintain the relative orientation of the axes to each other when rotating from the standard orientation to the estimated orientation is preferable. In this regard, the orthogonal matrix may be expressed as:

$$\widehat{\boldsymbol{R}} = argmin_{R \in O(3)} \left\| \boldsymbol{B}^T \boldsymbol{R} - \frac{3}{4} \widetilde{\boldsymbol{M}}^T {\boldsymbol{A}_S}^T \right\|_F \quad (31)$$

[0111] Where, in equation (31), $O(3)$ represents the group of orthogonal $3x3$ matrices and $\| \ \|_F$ represents the Frobenius norm.

[0112] By defining the orthogonal matrix $\widehat{\boldsymbol{R}}$ as above, the particular problem may be reduced to the Orthogonal Procrustes Problem to solve for $\widehat{\boldsymbol{R}}$. First, the following is defined:

$$\boldsymbol{Z} = \frac{3}{4} \boldsymbol{B} \widetilde{\boldsymbol{M}}^T \boldsymbol{A}_S^T \quad (32)$$

[0113] A singular devalue decomposition of $\boldsymbol{Z}$ is performed to obtain:

$$\boldsymbol{Z} = \boldsymbol{U} \boldsymbol{\Sigma} \boldsymbol{V}^T \quad (33)$$

[0114] Where in equation (33), $\boldsymbol{U}$ is an orthogonal $3x3$ matrix that contains the left singular vectors of $\boldsymbol{Z}$; $\boldsymbol{\Sigma}$ is an orthogonal $3x3$ matrix that contains the singular values of $\boldsymbol{Z}$; and $\boldsymbol{V}^T$ is an orthogonal $3x3$ matrix that contains the right singular vectors of $\boldsymbol{Z}$. Given the above, the solution to the Orthogonal Procrustes Problem of (33) is given by:

$$\widehat{\boldsymbol{R}} = \boldsymbol{U} \boldsymbol{V}^T \quad (34)$$

[0115] Accordingly, with equation (34), an estimate $\widehat{\boldsymbol{R}}$ is obtained that may be applied to the standard orientation matrix $\boldsymbol{A}_S$to give the true axes orientation matrix $\boldsymbol{A}$. Thus, an estimate $\widehat{\boldsymbol{A}}$ of $\boldsymbol{A}$ can be obtained by applying equation (4) to yield:

$$\widehat{\boldsymbol{A}} = \widehat{\boldsymbol{R}} \boldsymbol{A}_S \quad (35)$$

[0116] In the embodiment described above, the Orthogonal Procrustes Problem provides an advantage in reducing translation and/or angular error that may be introduced by the least-squares fit and, thus, provides an accurate estimation of the needed rotation matrix. By accurately estimating the rotation matrix, an accurate estimation of the orientation of an arbitrarily placed lattice structure in a magnetic field detection system having a magneto-optical defect center material may be produced. This, in turn, reduces the process to determining the orientation of a diamond in the magnetic detection system 600 to a simple calibration method

that may be calculated and controlled by the controller 680 and performed before sensing begins, without the need for pre-manufacturing processes to orient the lattice structure relative to the sensor or additional equipment for visual aid inspection. Moreover, with the above, an accurate estimate of the true orientation of the axes of the NV diamond material 620 may be obtained and recovery of the external magnetic field for magnetic sensing may be improved.

[0117] The embodiments of the inventive concepts disclosed herein have been described in detail with particular reference to preferred embodiments thereof, but it will be understood by those skilled in the art that variations and modifications can be effected within the spirit and scope of the inventive concepts.

WHAT IS CLAIMED IS:

1. A system for determining an orientation of a nitrogen vacancy (NV) diamond material comprising:

the NV diamond material comprising a plurality of NV centers;

a radio frequency (RF) excitation source configured to provide RF excitation to the NV diamond material;

an optical excitation source configured to provide optical excitation to the NV diamond material;

an optical detector configured to receive an optical signal emitted by the NV diamond material, the optical signal being a fluorescence intensity having a plurality of reduced responses across a frequency range of the RF excitation;

a first magnetic field generator configured to generate a control magnetic field that separates the plurality of reduced responses in the optical signal emitted by the NV diamond material;

a second magnetic field generator configured to generate a plurality of calibration magnetic fields; and

a controller configured to:

control the second magnetic field generator to successively generate the plurality of calibration magnetic fields, each having a predetermined direction;

successively receive a plurality of light detection signals from the optical detector based on the optical signals emitted by the NV diamond material;

store a plurality of measurement values based on the successively received plurality of light detection signals; and

calculate a rotation and/or reflection of a predetermined standard orientation of the NV diamond material to an actual orientation of the NV diamond material based on the stored plurality of measurement values.

2. A system for determining an orientation of a nitrogen vacancy diamond material comprising:

a nitrogen vacancy (NV) diamond material comprising a plurality of NV centers;

a magnetic field generator configured to generate a magnetic field that is applied to the NV diamond material;

a radio frequency (RF) excitation source configured to provide RF excitation to the NV diamond material;

an optical excitation source configured to provide optical excitation to the NV diamond material;

an optical detector configured to receive an optical signal emitted by the NV diamond material, the optical signal being a fluorescence intensity having a plurality of reduced responses across a frequency range of the RF excitation; and

a controller configured to:

control the magnetic field generator to generate a control magnetic field that separates the plurality of reduced responses in the optical signal emitted by the NV diamond material;

control the magnetic field generator to successively generate a plurality of calibration magnetic fields, each having a predetermined direction;

successively receive a plurality of light detection signals from the optical detector based on the optical signals emitted by the NV diamond material;

store a plurality of measurement values based on the successively received plurality of light detection signals; and

calculate an orientation of the NV diamond material based on the stored measurement values.

3. The system of claim 2, wherein the plurality of calibration magnetic fields consist of three weak magnetic fields.

4. The system of claim 3, wherein the predetermined direction of one of the three magnetic fields is orthogonal to the predetermined directions of the other two of the three magnetic fields.

5. The system of claim 2, wherein the predetermined directions of the plurality of calibration magnetic fields are different from one another.

6. The system of claim 2, wherein the plurality of calibration magnetic fields is at least three.

7. The system of claim 2, wherein the magnetic field generator comprises a coil, wherein the controller is configured to control the coil to generate a magnetic field having a predetermined direction.

8. The system of claim 2, wherein the magnetic field generator comprises a plurality of coils, each of the coils being configured to generate a magnetic field having a predetermined direction, wherein each of the predetermined directions are different from one another.

9. The system of claim 2, wherein the plurality of coils is three and wherein the plurality of coils is configured to generate a magnetic field having three directions orthogonal to one another.

10. The system of claim 2, wherein the controller calculates the orientation of the NV diamond material relative to a predetermined standard orientation of the NV diamond material.

11. The system of claim 10, wherein the controller calculates a rotation and/or reflection of the orientation of the NV diamond material from the predetermined standard orientation of the NV diamond material.

12. The system of claim 11, wherein the controller calculates the rotation and/or reflection based on a least squares fit between the stored measurement values and the generated plurality of calibration magnetic fields.

13. The system of claim 11, wherein the controller calculates the rotation and/or reflection based on the solution to the Orthogonal Procrustes Problem.

14. A system for determining an orientation of a nitrogen vacancy diamond material comprising:

a nitrogen vacancy (NV) diamond material comprising a plurality of NV centers;

a radio frequency (RF) excitation source configured to provide RF excitation to the NV diamond material;

an optical excitation source configured to provide optical excitation to the NV diamond material;

an optical detector configured to receive an optical signal emitted by the NV diamond material, the optical signal being a fluorescence intensity having a plurality of reduced responses across a frequency range of the RF excitation;

a first magnetic field generator configured to generate a control magnetic field that separates the plurality of reduced responses in the optical signal emitted by the NV diamond material;

a second magnetic field generator configured to generate a plurality of calibration magnetic fields; and

a controller configured to:

control the second magnetic field generator to successively generate the plurality of calibration magnetic fields, each having a predetermined direction;

successively receive a plurality of light detection signals from the optical detector based on the optical signals emitted by the NV diamond material;

store a plurality of measurement values based on the successively received plurality of light detection signals; and

calculate an orientation of the NV diamond material based on the stored plurality of measurement values.

15. The system of claim 14, wherein the first magnetic field generator is a permanent magnet.

16. The system of claim 14, wherein the second magnetic field generator comprises a coil, wherein the controller is configured to control the coil to generate a magnetic field having a predetermined direction.

17. The system of claim 14, wherein the second magnetic field generator comprises a plurality of coils, each of the coils being configured to generate a magnetic field having a predetermined direction.

18. The system of claim 15, wherein the first magnetic field generator is affixed to a pivot assembly configured to position the first magnetic field generator to a predetermined orientation such that the first magnetic field generator generates the control magnetic field having a predetermined direction, and wherein the controller is further configured to control the pivot assembly.

19. The system of claim 14, wherein the second magnetic field generator is affixed to a pivot assembly configured to position the second magnetic field generator to a predetermined orientation such that the second magnetic field generator generates the control magnetic field having a predetermined direction, and wherein the controller is further configured to control the pivot assembly.

20. The system of claim 14, wherein the controller calculates the orientation of the NV diamond material relative to a predetermined standard orientation of the NV diamond material.

21. The system of claim 20, wherein the controller calculates a rotation and/or reflection of the orientation of the NV diamond material from the predetermined standard orientation of the NV diamond material.

22. The system of claim 21, wherein the controller calculates the rotation and/or reflection based on a least squares fit between the stored measurement values and the generated plurality of calibration magnetic fields.

23. A system for determining an orientation of a nitrogen vacancy diamond material comprising:

a nitrogen vacancy (NV) diamond material comprising a plurality of NV centers;

a radio frequency (RF) excitation source configured to provide RF excitation to the NV diamond material;

an optical excitation source configured to provide optical excitation to the NV diamond material;

an optical detector configured to receive an optical signal emitted by the NV diamond material, the optical signal being a fluorescence intensity having a plurality of reduced responses across a frequency range of the RF excitation;

a first magnetic field generator affixed to a pivot assembly, the pivot assembly being configured to position the first magnetic field generator to a predetermined orientation such that the first magnetic field generator generates a control magnetic field having a predetermined direction that separates the plurality of reduced responses in the optical signal emitted by the NV diamond material;

a second magnetic field generator configured to generate a plurality of calibration magnetic fields; and

a controller configured to:

control the pivot assembly to position the first magnetic field generator to the predetermined orientation to generate the control magnetic field;

control the second magnetic field generator to successively generate the plurality of calibration magnetic fields, each having a predetermined direction;

successively receive a plurality of light detection signals from the optical detector based on the optical signals emitted by the NV diamond material;

store a plurality of measurement values based on the successively received plurality of light detection signals; and

calculate an orientation of the NV diamond material based on the stored plurality of measurement values.

24. A method for determining a lattice orientation of a nitrogen vacancy (NV) diamond material comprising:

generating a control magnetic field applied to the NV diamond material;

applying the control magnetic field to the NV diamond material comprising a plurality of NV centers;

generating a plurality of calibration magnetic fields, each having a predetermined direction;

applying the plurality of calibration magnetic fields to the NV diamond material;

receiving a plurality of light detection signals from an optical detector configured to receive a plurality of optical signals emitted by the NV diamond material due to the applied control magnetic field and the plurality of calibration magnetic fields;

storing a plurality of measurement values based on the received plurality of light detection signals;

and

calculating an orientation of the NV diamond material based on the plurality of stored measurement values.

25. A method for recovering a sign value of measurement values based on a fluorescence intensity having a plurality of reduced responses emitted by a magneto-optical defect center material, comprising:

assigning the largest measurement value a first sign value, the first sign value being positive or negative;

assigning the second largest measurement value a second sign value, the second sign value being an opposite sign value to the first sign value;

assigning the third largest measurement value a third sign value, the third sign value being an opposite sign value to the first sign value; and

assigning the fourth largest measurement value a fourth sign value, the fourth sign value being a sign value such that the sum of the first, second, third, and fourth sign values approach zero.

26. The method of claim 25, wherein the first sign value is assigned a positive sign value.

27. The method of claim 26, wherein the fourth sign value is assigned a positive sign value.

28. The method of claim 26, wherein the fourth sign value is assigned a negative sign value.

29. A system for determining an orientation of a magneto-optical defect center material comprising:

a magneto-optical defect center material comprising a plurality of defect centers;

a magnetic field generator configured to generate a magnetic field;

a radio frequency (RF) excitation source configured to provide RF excitation to the magneto-optical defect center material;

an optical excitation source configured to provide optical excitation to the magneto-optical defect center material;

an optical detector configured to receive an optical signal emitted by the magneto-optical defect center material, the optical signal being a fluorescence intensity having a plurality of reduced responses across a frequency range of the RF excitation; and

a controller configured to:

control the magnetic field generator to generate a control magnetic field that separates the plurality of reduced responses in the optical signal emitted by the magneto-optical defect center material;

control the magnetic field generator to successively generate a plurality of calibration magnetic fields, each having a predetermined direction;

successively receive a plurality of light detection signals from the optical detector based on the optical signals emitted by the magneto-optical defect center material;

store a plurality of measurement values based on the successively received plurality of light detection signals; and

calculate an orientation of the magneto-optical defect center material based on the stored measurement values.

30. The system of claim 29, wherein the magneto-optical defect center material is a nitrogen vacancy (NV) diamond material.

31. A system for determining an orientation of a nitrogen vacancy (NV) diamond material comprising a plurality of NV centers, comprising:

means for providing radio frequency (RF) excitation to the NV diamond material;

means for receiving an optical signal emitted by the NV diamond material, the optical signal being a fluorescence intensity having a plurality of reduced responses across a frequency range of the RF excitation;

means for generating a control magnetic field that separates the plurality of reduced responses in the optical signal emitted by the NV diamond material;

means for successively generating a plurality of calibration magnetic fields, each having a predetermined direction;

means for successively receiving a plurality of light detection signals based on the optical signals emitted by the NV diamond material;

means for storing a plurality of measurement values based on the successively received plurality of light detection signals; and

means for calculating an orientation of the NV diamond material based on the stored measurement values.

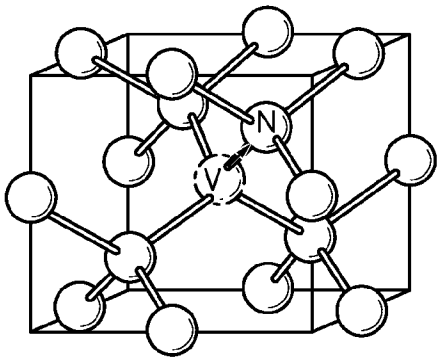
N
V

FIG. 1

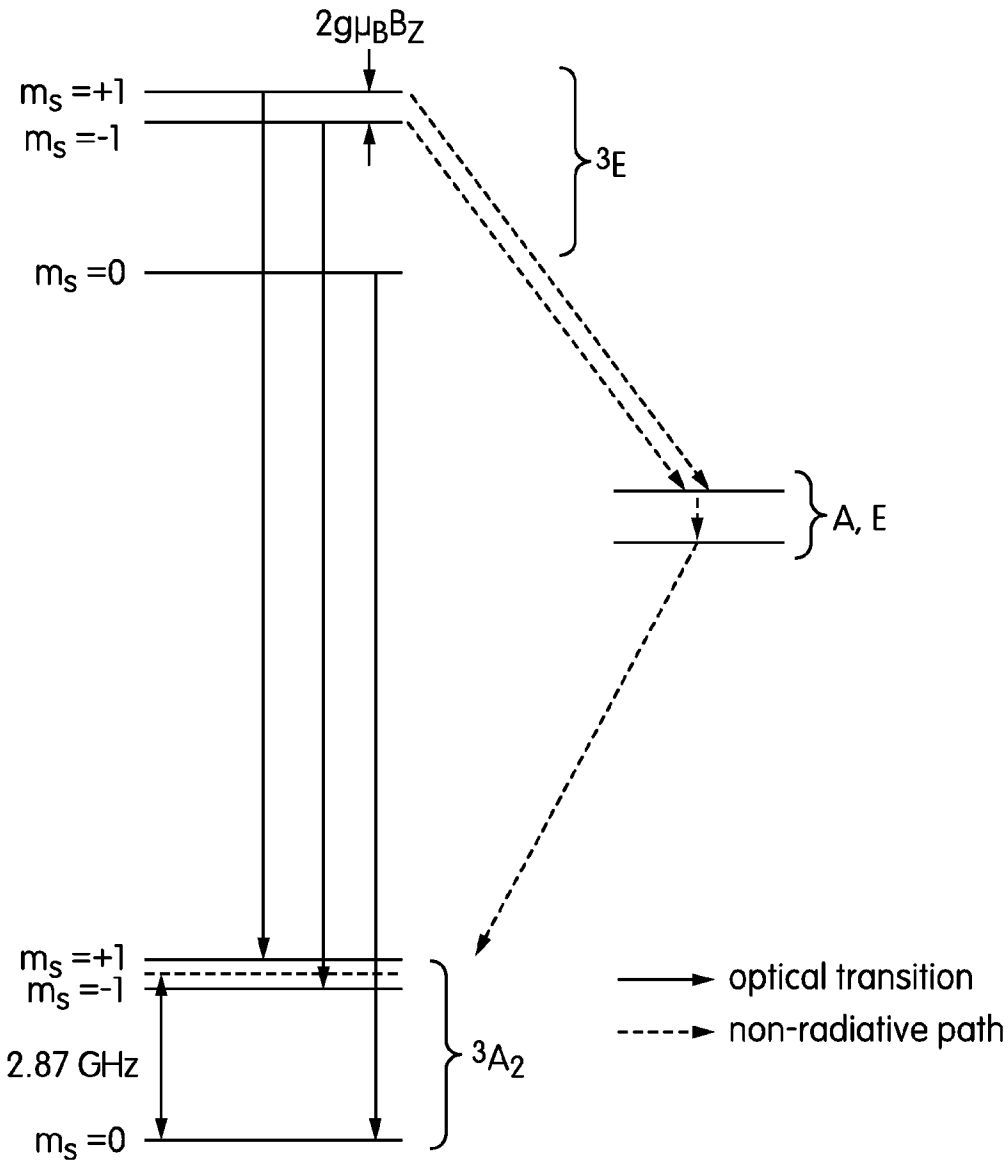
2gμBBZ
ms =+1
ms =-1
ms =0
3E
A, E
ms =+1
ms =-1
2.87 GHz
ms =0
3A2
optical transition
non-radiative path

FIG. 2

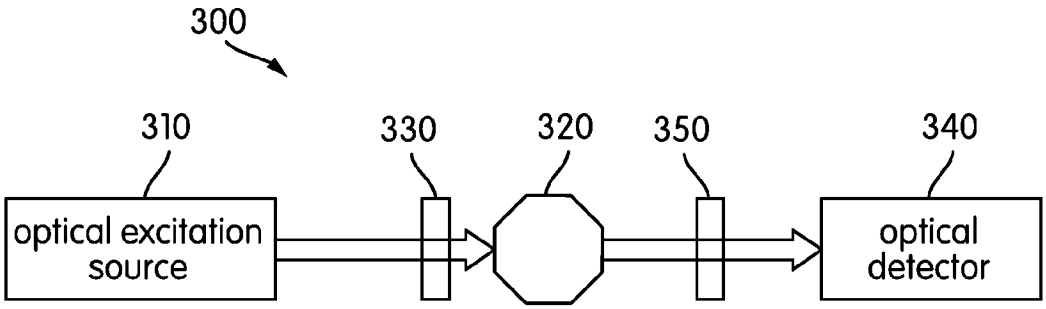

FIG. 3

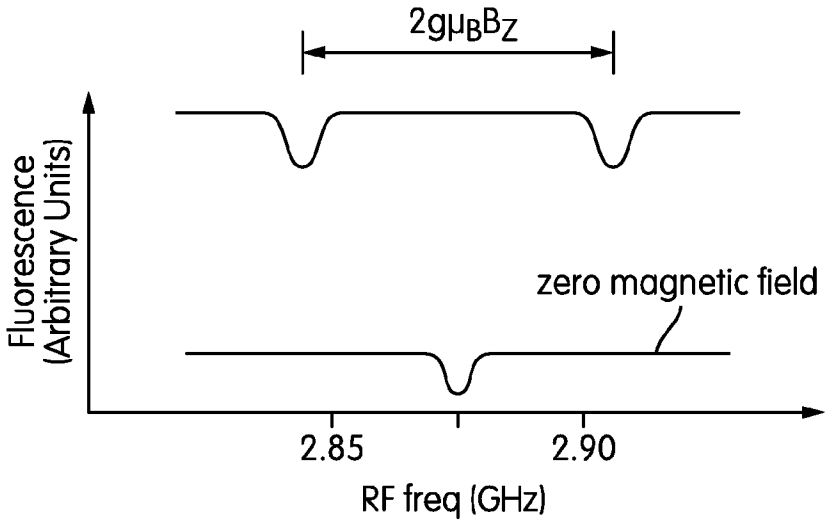

FIG. 4

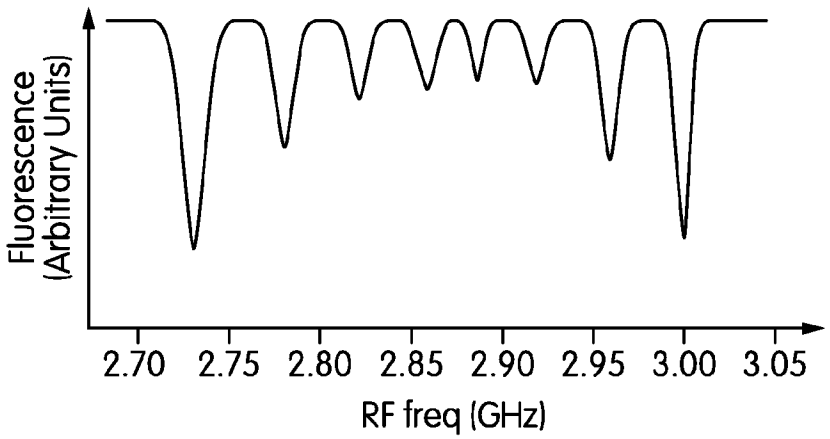

FIG. 5

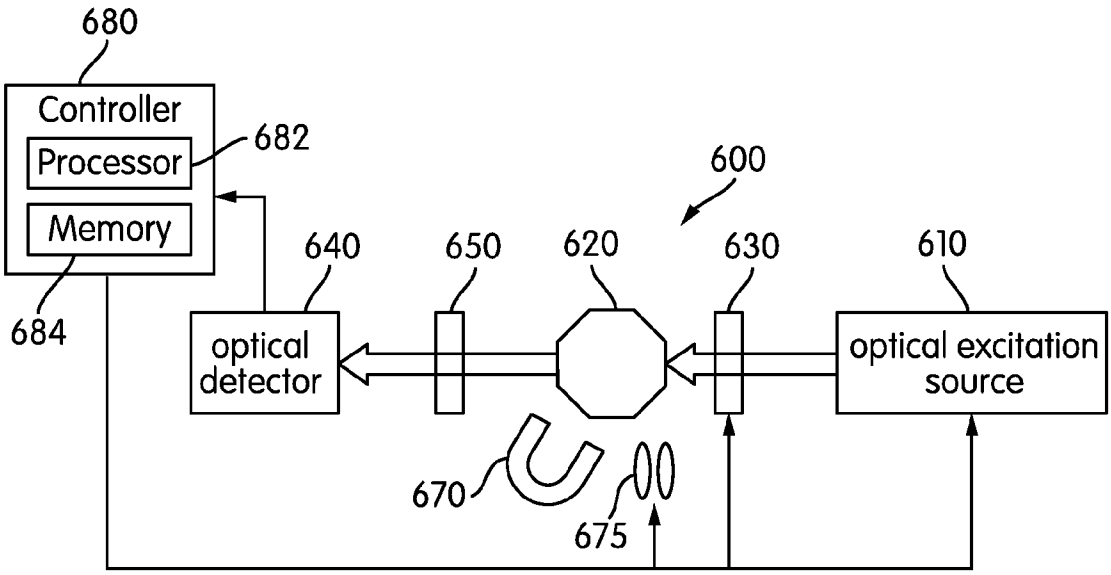
680
Controller
Processor
682
Memory
684
600
640
650
620
630
610
optical detector
optical excitation source
670
675

FIG. 6

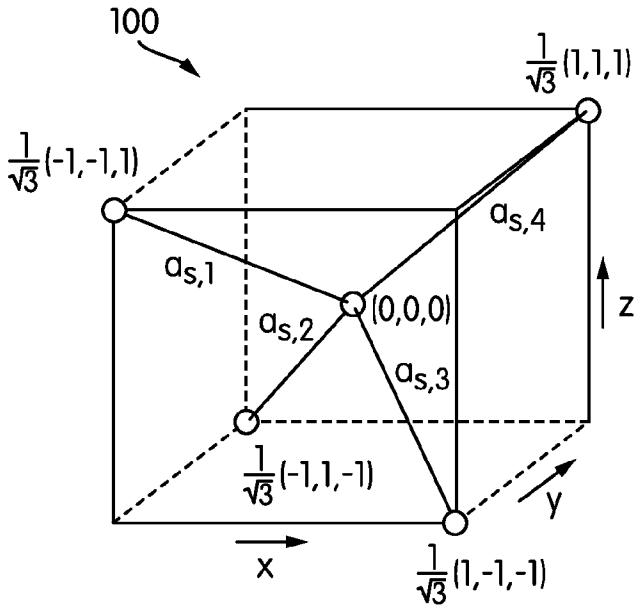
100
$\frac{1}{\sqrt{3}}(1,1,1)$
$\frac{1}{\sqrt{3}}(-1,-1,1)$
$a_{s,4}$
$a_{s,1}$
$a_{s,2}$
(0,0,0)
$a_{s,3}$
z
$\frac{1}{\sqrt{3}}(-1,1,-1)$
y
x
$\frac{1}{\sqrt{3}}(1,-1,-1)$

FIG. 7A

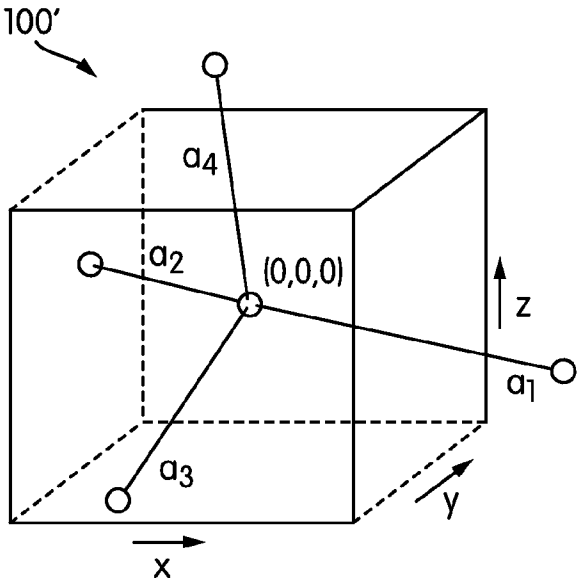
100'
a_4
a_2
(0,0,0)
z
a_1
a_3
y
x

FIG. 7B

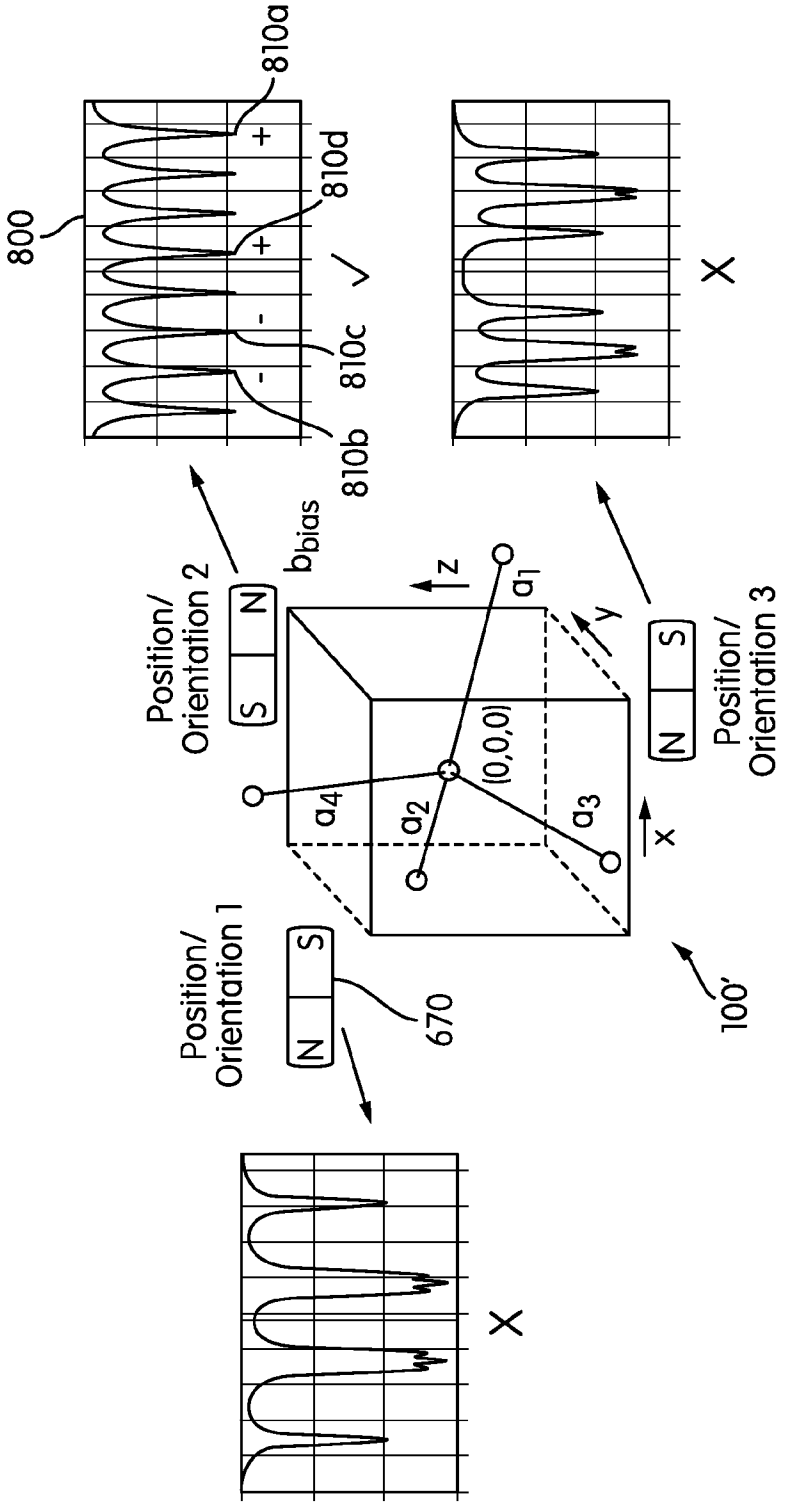
800
810a
810d
810c
810b
+
+
-
-
X
X
Position/
Orientation 2
Position/
Orientation 1
Position/
Orientation 3
b_{bias}
z
y
x
a_1
a_2
a_3
a_4
(0,0,0)
N
S
S
N
N
S
670
100'

FIG. 8

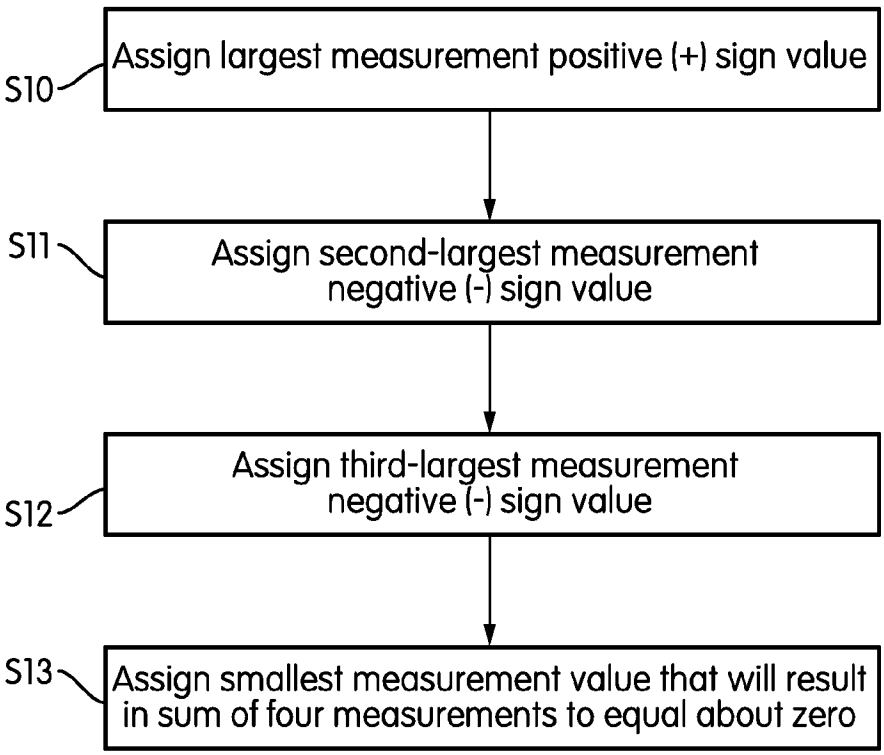
S10
Assign largest measurement positive (+) sign value
S11
Assign second-largest measurement negative (-) sign value
S12
Assign third-largest measurement negative (-) sign value
S13
Assign smallest measurement value that will result in sum of four measurements to equal about zero

FIG. 9

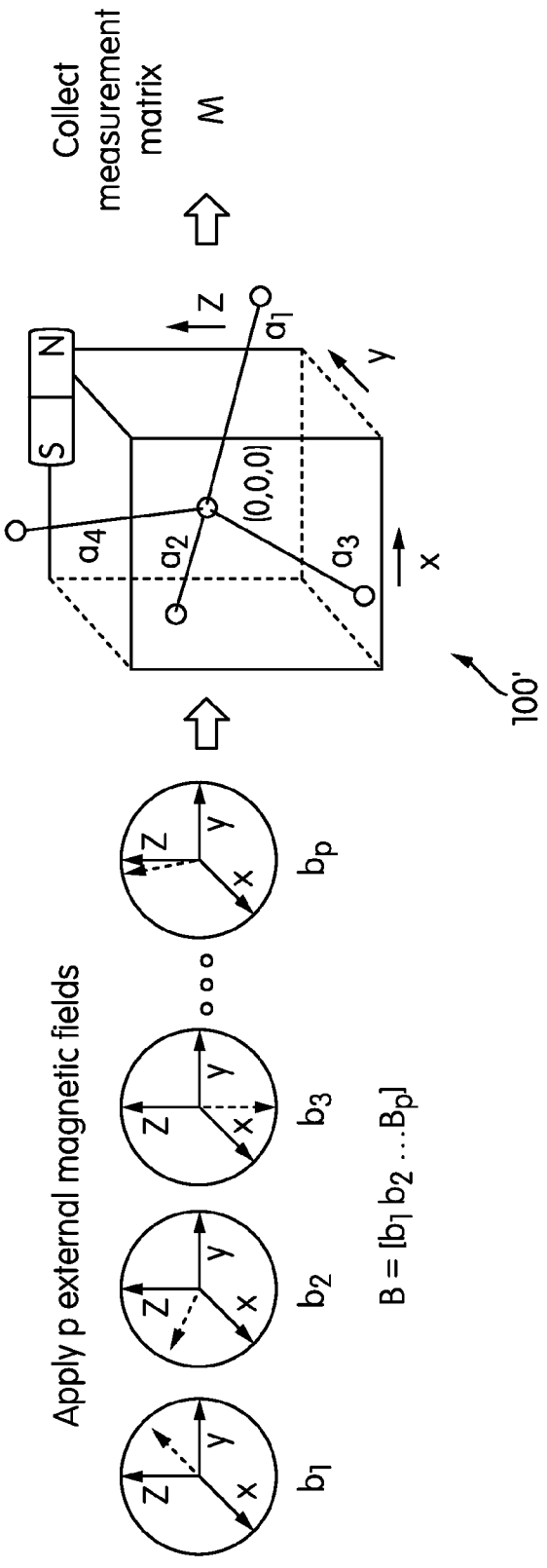
Collect measurement matrix
M
Apply p external magnetic fields
B = [b1 b2 ...Bp]
b1
b2
b3
bp
a1
a2
a3
a4
(0,0,0)
N
S
x
y
z
100'

FIG. 10

INTERNATIONAL SEARCH REPORT

International application No.
PCT/US2016/014331

Box No. II Observations where certain claims were found unsearchable (Continuation of item 2 of first sheet)

This international search report has not been established in respect of certain claims under Article 17(2)(a) for the following reasons:

1. ☐ Claims Nos.:
because they relate to subject matter not required to be searched by this Authority, namely:

2. ☐ Claims Nos.:
because they relate to parts of the international application that do not comply with the prescribed requirements to such an extent that no meaningful international search can be carried out, specifically:

3. ☐ Claims Nos.:
because they are dependent claims and are not drafted in accordance with the second and third sentences of Rule 6.4(a).

Box No. III Observations where unity of invention is lacking (Continuation of item 3 of first sheet)

This International Searching Authority found multiple inventions in this international application, as follows:
See supplemental page

1. ☐ As all required additional search fees were timely paid by the applicant, this international search report covers all searchable claims.

2. ☐ As all searchable claims could be searched without effort justifying additional fees, this Authority did not invite payment of additional fees.

3. ☐ As only some of the required additional search fees were timely paid by the applicant, this international search report covers only those claims for which fees were paid, specifically claims Nos.:

4. ☒ No required additional search fees were timely paid by the applicant. Consequently, this international search report is restricted to the invention first mentioned in the claims; it is covered by claims Nos.:
1-24, 29-31

Remark on Protest

☐ The additional search fees were accompanied by the applicant's protest and, where applicable, the payment of a protest fee.

☐ The additional search fees were accompanied by the applicant's protest but the applicable protest fee was not paid within the time limit specified in the invitation.

☐ No protest accompanied the payment of additional search fees.

INTERNATIONAL SEARCH REPORT

International application No.
PCT/US2016/014331

A. CLASSIFICATION OF SUBJECT MATTER
IPC(8) - G01R 35/00, G01R 33/02, G01R 33/032 (2016.01)
CPC - G01R 33/0023, G01R 33/02, G01R 33/032, G01R 35/00 (2016.02)
According to International Patent Classification (IPC) or to both national classification and IPC

B. FIELDS SEARCHED

Minimum documentation searched (classification system followed by classification symbols)
IPC(8) - G01R 33/02, G01R 33/032, G01R 35/00 (2016.01)
CPC - G01R 33/0023, G01R 33/02, G01R 33/032, G01R 35/00 (2016.02)

Documentation searched other than minimum documentation to the extent that such documents are included in the fields searched
USPC - 324/244, 324/244.1 (keyword delimited)

Electronic data base consulted during the international search (name of data base and, where practicable, search terms used)
PatBase, Google Patents, Google Scholar
Search terms used: nitrogen vacancy, color center, color defect, spin defect, spin center, calibration, magnetic field generation, least squares, procrustes, pivot assembly

C. DOCUMENTS CONSIDERED TO BE RELEVANT

Category*	Citation of document, with indication, where appropriate, of the relevant passages	Relevant to claim No.
Y	WO 2013/188732 A1 (THE TRUSTEES OF COLUMBIA UNIVERSITY IN THE CITY OF NEW YORK) 19 December 2013 (19.12.2013) entire document	1-24, 29-31
Y	US 3,389,333 A (WOLFF et al) 18 June 1968 (18.06.1968) entire document	1-22, 24, 29-31
Y	US 2014/0335339 A1 (ELEMENT SIX TECHNOLOGIES LIMITED) 13 November 2014 (13.11.2014) entire document	12, 22
Y	US 2014/0012505 A1 (SMITH et al) 09 January 2014 (09.01.2014) entire document	13
Y	US 2008/0016677 A1 (CREIGHTON) 24 January 2008 (24.01.2008) entire document	18, 19, 23
A	US 2003/0235136 A1 (AKSELROD et al) 25 December 2003 (25.12.2003) entire document	1-24, 29-31

☐ Further documents are listed in the continuation of Box C. ☐ See patent family annex.

* Special categories of cited documents:
"A" document defining the general state of the art which is not considered to be of particular relevance
"E" earlier application or patent but published on or after the international filing date
"L" document which may throw doubts on priority claim(s) or which is cited to establish the publication date of another citation or other special reason (as specified)
"O" document referring to an oral disclosure, use, exhibition or other means
"P" document published prior to the international filing date but later than the priority date claimed
"T" later document published after the international filing date or priority date and not in conflict with the application but cited to understand the principle or theory underlying the invention
"X" document of particular relevance; the claimed invention cannot be considered novel or cannot be considered to involve an inventive step when the document is taken alone
"Y" document of particular relevance; the claimed invention cannot be considered to involve an inventive step when the document is combined with one or more other such documents, such combination being obvious to a person skilled in the art
"&" document member of the same patent family

Date of the actual completion of the international search	Date of mailing of the international search report
06 May 2016	26 MAY 2016
Name and mailing address of the ISA/ Mail Stop PCT, Attn: ISA/US, Commissioner for Patents P.O. Box 1450, Alexandria, VA 22313-1450 Facsimile No. 571-273-8300	Authorized officer Blaine R. Copenheaver PCT Helpdesk: 571-272-4300 PCT OSP: 571-272-7774

INTERNATIONAL SEARCH REPORT

International application No.
PCT/US2016/014331

Continued from Box No. III Observations where unity of invention is lacking

This application contains the following inventions or groups of inventions which are not so linked as to form a single general inventive concept under PCT Rule 13.1. In order for all inventions to be examined, the appropriate additional examination fees must be paid.

Group I, claims 1-24,29-31, drawn to determining an orientation of a nitrogen vacancy (NV) diamond material.
Group II, claims 25-28, drawn to a method for recovering a sign value of measurement values.

The inventions listed as Groups I-II do not relate to a single general inventive concept under PCT Rule 13.1 because, under PCT Rule 13.2, they lack the same or corresponding special technical features for the following reasons: the special technical feature of the Group I invention: a first magnetic field generator configured to generate a control magnetic field that separates the plurality of reduced responses in the optical signal emitted by the material; calculate a rotation and/or reflection of a predetermined standard orientation of the material to an actual orientation of the material based on the stored plurality of measurement values as claimed therein is not present in the invention of Group II. The special technical feature of the Group II invention: assigning the third largest measurement value a third sign value, the third sign value being an opposite sign value to the first sign value; and assigning the fourth largest measurement value a fourth sign value, the fourth sign value being a sign value such that the sum of the first, second, third, and fourth sign values approach zero as claimed therein is not present in the invention of Group I.

Groups I and II lack unity of invention because even though the inventions of these groups require the technical feature of a fluorescence intensity emitted by a magneto-optical defect center material, this technical feature is not a special technical feature as it does not make a contribution over the prior art.

Specifically, US 2003/0235136 A1 (AKSELROD et al) 25 December 2003 (25.12.2003) teaches a fluorescence intensity emitted by a magneto-optical defect center material 9Paras. 75-78 and 85-86).

Since none of the special technical features of the Group I or II inventions are found in more than one of the inventions, unity of invention is lacking.