(19) LE GOUVERNEMENT DU GRAND-DUCHÉ DE LUXEMBOURG
Ministère de l'Économie

(11) N° de publication : **LU509337**

https://patent.public.lu/fo-eregister-view/

(12) **BREVET D'INVENTION** **B1**

(21) N° de dépôt: LU509337

(51) Int. Cl.:
E04B 9/00, E04F 13/00, E04B 2/56

(22) Date de dépôt: 13/12/2024

(30) Priorité:
19/11/2024 CN 202411653338.7

(43) Date de mise à disposition du public: 19/06/2025

(47) Date de délivrance: 19/06/2025

(DX) Date d'expiration: 13/12/2030

(85) Date d'entrée en phase nationale:

(86) N° de dépôt de la demande internationale:

(73) Titulaire(s):
CHONGQING VOCATIONAL INSTITUTE OF ENGINEERING – 402260 Chongqing (China)

(72) Inventeur(s):
SUN Lei – China

(74) Mandataire(s):
Patent42 SA – 4081 Esch-sur-Alzette (Luxembourg)

(54) **AUXILIARY DEVICE FOR BUILDING INTERIOR DECORATION.**

(57) The application discloses an auxiliary device for building interior decoration, which comprises at least two expansion joints vertically propped between two indoor walls; a plurality of cross bars, fixed between two expansion joints, are used as a keel bracket of the ceiling frame; a plurality of vertical bars are fixed between two indoor walls as another keel bracket of the ceiling frame; the vertical bars and the cross bars are staggered to form the ceiling frame, and the gusset plates are placed in the grid of the ceiling frame. In the application, the traditional ceiling keel structure is changed, and an expansion joint is adopted, which is propped between the wall surfaces, and a gusset plate is installed between the two expansion joints.

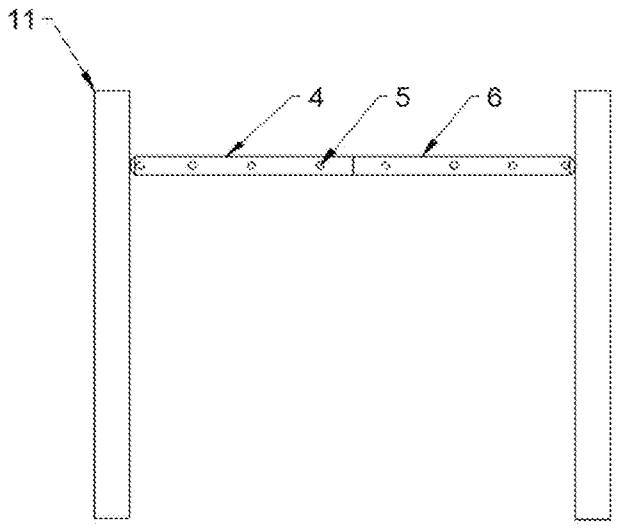

Fig. 5

DESCRIPTION

AUXILIARY DEVICE FOR BUILDING INTERIOR DECORATION

TECHNICAL FIELD

The application relates to the technical field of architectural design, in particular to an auxiliary device for building interior decoration.

BACKGROUND

When building interior decoration, the ceiling is a necessary process indoors. By installing aluminum alloy and other frames on the ceiling, it is used as the installation structure of ceiling plates.

As shown in Fig. 1, in the traditional ceiling structure, a ceiling frame 1 is fixedly installed on the wall, and the ceiling frame 1 is fixedly supported on the wall by angle steel or other supporting pieces 2 fixed on the wall. The ceiling frame 1 has a grid for placing gusset plates 3.

When the above-mentioned frame is installed, it is necessary to punch holes in the wall and install supports such as angle steel, which will damage the wall. Secondly, aluminum alloy mounting frames are mostly sheet structures with low bearing capacity. Finally, because the frame keel is generally installed in grid structure, it is necessary to assemble multiple sheet keels on site when disassembling and assembling, which requires many supporting facilities, and it is time-consuming to disassemble and assemble the ceiling frame.

SUMMARY

The main purpose of this application is to provide an auxiliary device for building interior decoration, so as to solve the current problems.

In order to achieve the above objectives, the application provides the following technologies:

an auxiliary device for building interior decoration comprises,

at least two expansion joints vertically propped between two indoor walls;

a plurality of cross bars, fixed between two expansion joints, are used as a keel bracket of the ceiling frame;

a plurality of vertical bars are fixed between two indoor walls as another keel bracket of the ceiling frame;

the vertical bars and the cross bars are staggered to form the ceiling frame, and the gusset plates are placed in the grid of the ceiling frame.

As an optional embodiment of the application, optionally, the expansion joint comprises:

a main section, which is a straight rod;

an auxiliary section, which is a straight rod and is telescopically connected with the main section;

a plurality of mounting holes, which are uniformly arranged on the main section and the auxiliary section; both ends of the cross bar are connected to the mounting hole between the two expansion joints.

As an optional embodiment of the application, optionally, both the main section and the auxiliary section are both hollow tubes with a wall thickness of 2.0-3.5 mm.

As an optional embodiment of the present application, optionally, the vertical bar and the cross bar are both hollow tubes with a wall thickness of 1.0-2.5 mm; and the two ends are provided with connectors corresponding to the expansion joints.

As an optional embodiment of the application, optionally, the vertical bar and the cross bar are both sheets with a thickness of 2.5-4.5 mm; and the two ends are provided with connectors corresponding to the expansion joints.

As an optional embodiment of the application, it optionally further comprises:

a plurality of right-angle shoulder-lifting structures which are uniformly arranged on the outer side surfaces of the vertical bar and the cross bar; two adjacent vertical bars and right-angle shoulder-lifting structures adjacent to the cross bars form a grid frame unit;

the gusset plate is placed in the grid frame unit.

As an optional embodiment of the application, it optionally further comprises:

a threaded hole arranged on one of the main section or the auxiliary section;

the screw is arranged on that other of the main section or the auxiliary section;

the screw is fitted into the threaded hole to telescopically connect the main section and the auxiliary section.

As an optional embodiment of the application, it optionally further comprises:

a positioning piece which is arranged on the end face of the main section and/or the auxiliary section on the side far from the joint; when that expansion joint is tightly adjusted, two ends of the expansion joint are limited between two wall surfaces by the positioning piece.

As an optional embodiment of the application, it optionally further comprises:

a positioning hole arranged on the end face of the main section and/or the auxiliary section on the side far from the joint;

a positioning connecting rod arranged on the positioning piece;

a positioning connecting rod fitted in the positioning hole to fix the positioning piece on the end face of the main section.

As an optional embodiment of the application, it optionally further comprises:

a first lock nut, which is fitted on the screw and used for locking the main section;

a second lock nut, which is fitted on the screw for locking the auxiliary section;

the first lock nut and the second lock nut have the same thread or the opposite thread.

Compared with the prior art, the application can bring the following technical effects.

1. In this application, the traditional ceiling keel structure is changed, and an expansion joint is adopted, which is pushed between the wall surfaces, and a gusset plate is installed between the two expansion joints, so that it is unnecessary to drill holes in the wall surfaces to install supporting angle steel, and the wall surfaces are protected from being damaged.

2. The expansion joint can be assembled and disassembled quickly, which greatly shortens the construction gas supply for ceiling installation; and is simple in structure, telescopic and adjustable in length, can adapt to indoor spaces with different sizes, and saves working hours and the cost of installing keels.

BRIEF DESCRIPTION OF THE FIGURES

The accompanying drawings, which constitute a part of this application, are provided to provide a further understanding of this application and make other features, objects and advantages of this application more obvious. The drawings of exemplary embodiments of this application and their descriptions are used to explain this application, and do not constitute undue limitations on this application. In the attached drawings:

Fig. 1 is a schematic structural view of an existing ceiling installation frame;

Fig. 2 is a schematic structural view of the expansion joint of the present invention;

Fig. 3 is a schematic structural diagram of the present invention in which a frame keel is installed on an expansion joint;

Fig. 4 is a schematic plan view of the present invention when it is fixed between walls;

Fig. 5 is a schematic side view of Fig. 4 of the present invention;

Fig. 6 is a schematic side view of the keel bar of the present invention;

Fig. 7 is a schematic diagram of the use structure of the gusset plate placed on the grid frame unit of the present invention;

Fig. 8 is a schematic diagram of the explosion structure of the expansion joint of the present invention;

Fig. 9 is a schematic diagram of the explosion structure of the expansion joint according to another embodiment of the present invention;

In the drawings: 1. ceiling frame, 2. supporting piece, 3. gusset plate, 4. main section, 5. mounting hole, 6. auxiliary section, 7. screw, 8. positioning piece, 9. cross bar, 10. vertical bar, 11. wall, 12. right-angle shoulder-lifting structure, 13. first lock nut, 14. second lock nut.

DESCRIPTION OF THE INVENTION

In order to make people in the technical field better understand the scheme of the application, the technical scheme in the embodiment of the application will be described clearly and completely with the attached drawings. Obviously, the described embodiment is only a part of the embodiment of the application, but not the whole embodiment. Based on the embodiments in this application, all other embodiments obtained by ordinary technicians in this field without creative work should belong to the protection scope of this application.

It should be noted that the terms "first" and "second" in the description and claims of this application and the above drawings are used to distinguish similar objects, and are not necessarily used to describe a specific order or sequence. It should be understood that the data thus used can be interchanged under appropriate circumstances, so that the embodiments of the present application described herein. Furthermore, the terms "including" and "having" and any variations thereof are intended to cover non-exclusive inclusion, for example, a process, method, system, product or equipment that includes a series of steps or units is not necessarily limited to those explicitly listed, but may include other steps or units not explicitly listed or inherent to such processes, methods, products or equipment.

In this application, the terms "up", "down", "left", "right", "front", "back", "top", "bottom", "inside", "outside", "center", "vertical", "horizontal", "transverse", "longitudinal", etc. indicate orientation or positional relationships based on the orientation or positional relationships shown in the accompanying drawings. These terms are mainly used to better describe the present application and its embodiments, and are not intended to limit that the indicated device, element, or component must have a specific orientation or be constructed and operated in a specific orientation.

Moreover, some of the above terms can be used to indicate not only the orientation or positional relationship, but also the other meaning. For example, the term "up" may also be used to indicate a certain dependency or connection relationship in some cases. For those skilled in the art, the specific meanings of these terms in this application can be understood according to the specific situation.

In addition, the meaning of the term "multiple" should be two or more.

It should be noted that the embodiments in this application and the features in the embodiments can be combined with each other without conflict. The present application will be described in detail with reference to the attached drawings and examples.

Example 1

As shown in Fig. 2-Fig. 4, an auxiliary device for building interior decoration includes,

at least two expansion joints vertically propped between two indoor walls 11; the expansion joint is a bar with adjustable length, which is used to push between two indoor walls 11 and serve as the main keel of the ceiling frame. Multiple can be set, but generally only two are needed. As shown in Fig. 4, just set a pair between the front and rear walls, close to the left and right adjacent walls (not shown), and install a network frame between the left and right expansion joints for gusset plate installation.

A plurality of cross bars 9, fixed between two expansion joints, are used as a keel bracket of the ceiling frame;

a plurality of vertical bars 10 are fixed between two indoor walls as another keel bracket of the ceiling frame;

the vertical bars 10 and the cross bars 9 are staggered to form the ceiling frame, and the gusset plates 3 are placed in the grid of the ceiling frame.

As shown in Fig. 3, the network frame for installing the gusset plate 3 is composed of the vertical bars 10 and the cross bars 9, which are staggered, and the cross bars 9 are perpendicular to the expansion joints, and the two ends are fixed by screwing or welding. In this embodiment, the screwing method is preferred. The vertical bar 10 can be arranged through the cross bars 9, or several short bars can be adopted and fixed between adjacent cross bars 9. The specific fixing method and structure are not limited here. Note that the movable distance between bars should be 3-10 mm, and it should not be too full. Grooves are needed on the outer side surfaces of the vertical bar 10 and the cross bar 9 for stably placing the gusset plate 3, and the specific structure is not limited.

When installed on the wall, the network frame shown in Fig. 3 can be formed first and then pushed between the walls, or the expansion joint can be pushed between two walls and then the keel frame can be built.

As shown in Fig. 4, the assembled gusset plate mounting frame is pushed between the walls 11 through two expansion joints, so that the gusset plate 3 can be mounted, and the process of quick disassembly and assembly can be realized. It's a man-hour when you get married, and it's convenient for later maintenance.

As shown in Fig. 2, as an alternative embodiment of the present application, optionally, the expansion joint comprises:

a main section 4, which is a straight rod;

an auxiliary section 6, which is a straight rod and is telescopically connected with the main section 4;

a plurality of mounting holes 5, which are uniformly arranged on the main section 4 and the auxiliary section 6; both ends of the cross bar 9 are connected to the mounting hole 5 between the two expansion joints.

As shown in Fig. 5, the expansion joint is composed of two main sections 4 and auxiliary sections 6, and the distance between them can be adjusted to adjust the length of the expansion joint. The main section 4 and the auxiliary section 6 are provided with a plurality of mounting holes for connecting the cross bars 9. As shown in Fig. 4, the two ends of the cross bar 9 are respectively screwed to the mounting holes 5 of the left and right expansion joints.

The diameter of the expansion joint can be kept larger than that of the cross bar and the vertical bar, which is convenient for processing installation holes.

As an optional embodiment of the present application, optionally, the main section 4 and the auxiliary section 6 are both hollow tubes with a wall thickness of 2.0-3.5 mm.

As an optional embodiment of the present application, optionally, the vertical bar 10 and the cross bar 9 are both hollow tubes with a wall thickness of 1.0-2.5 mm; and the two ends are provided with connectors corresponding to the expansion joints.

All adopt hollow tubes, which can reduce weight and save materials. The thickness can be set by yourself.

As an optional embodiment of the application, it optionally further comprises:

a plurality of right-angle shoulder-lifting structures 12 which are uniformly arranged on the outer side surfaces of the vertical bar 10 and the cross bar 9; two adjacent vertical bars 10 and right-angle shoulder-lifting structures 12 adjacent to the cross bars 9 form a grid frame unit;

the gusset plate 3 is placed in the grid frame unit.

As shown in Fig. 6, in order to prevent the gusset plate 3 from sliding in the grid surrounded by the vertical bar 10 and the cross bar 9 and improve the stability, a right-angle groove, namely a right-angle shoulder-lifting structure 12, is integrally formed on the outer side surfaces of the vertical bar 10 and the cross bar 9, which is convenient for stably placing the gusset plate without sliding.

As shown in Fig. 7, the four corners of the gusset plate 3 are placed in the grid formed by the vertical bar 10 and the cross bar 9, or in the grid formed by the vertical bar 10 and the cross bar 9 and the expansion joint, so long as one side of the grid is provided with a lifting shoulder, both of them can be stable and preferable. On the bar surfaces around the grid, the lifting shoulders are correspondingly arranged.

As an optional embodiment of the application, it optionally further comprises:

a threaded hole arranged on one of the main section 4 or the auxiliary section 6;

the screw 7 is arranged on that other of the main section 4 or the auxiliary section 6;

the screw 7 is fitted into the threaded hole to telescopically connect the main section 4 and the auxiliary section 6.

As shown in Fig. 8, in this embodiment, a screw 7 is arranged on the upper end face of the auxiliary section 6, which is correspondingly fitted in the threaded hole of the lower end face of the main section 4 and connected to form an expansion joint.

As shown in Fig. 8, as an optional embodiment of the present application, it optionally further includes:

a positioning piece 8 which is arranged on the end face of the main section 4 and/or the auxiliary section 6 on the side far from the joint; when that expansion joint is tightly adjusted, two ends of the expansion joint are limited between two wall surfaces by the positioning piece 8.

The two ends of the expansion joint need to be pressed against the wall 11. In order to protect the two ends of the expansion joint, a pressing positioning piece is arranged at both ends of the expansion joint. At the same time, it is used to improve the positioning support of the expansion joint and avoid sliding. In this embodiment, both the upper end face of the main section 4 and the lower end face of the auxiliary section 6 are provided with a positioning piece.

As an optional embodiment of the application, it optionally further comprises:

a positioning hole arranged on the end face of the main section 4 and/or the auxiliary section 6 on the side far from the joint;

a positioning connecting rod arranged on the positioning piece 8;

a positioning connecting rod fitted in the positioning hole to fix the positioning piece 8 on the end face of the main section 4.

The positioning piece is installed by screwing, so the upper end face of the main section 4 and the lower end face of the auxiliary section 6 are provided with threaded holes.

The positioning piece 8 consists of a connecting rod and a positioning cap, and the connecting rod is screwed in the positioning hole to fixedly connect the positioning piece to the expansion joint.

As an optional embodiment of the application, it optionally further comprises:

a first lock nut 13, which is fitted on the screw 7 and used for locking the main section 4;

a second lock nut 14, which is fitted on the screw 7 for locking the auxiliary section 6;

the first lock nut 13 and the second lock nut 14 have the same thread or the opposite thread.

Locking nuts are adopted and matched on the screw for locking the main section and the auxiliary section on both sides respectively. Avoid sliding between the main section and the auxiliary section after a long time because of the reaction force of the wall to the expansion joint, which leads to the frame falling off.

Example 2

On the basis of the above-mentioned Embodiment 1, this embodiment proposes another auxiliary device for building interior decoration, in which, as an optional embodiment of the application, the vertical bar 10 and the cross bar 9 are both sheets with a thickness of 2.5-4.5 mm; and the two ends are provided with connectors corresponding to the expansion joints.

In this embodiment, the sheet with mesh is used as the frame keel, which makes it follow the mainstream frame keel structure in the existing market and is convenient for direct processing.

Wherein, the two ends of the sheet are provided with threaded heads for fixing between expansion joints.

In order to ensure the strength, the thickness of the sheet is kept at 4.0 mm.

See Embodiment 1 for other structures, and this embodiment will not be described in detail.

The above is only the preferred embodiment of this application, and it is not used to limit this application. For those skilled in the art, this application can be modified and varied. Any modification, equivalent substitution, improvement, etc. made within the spirit and principles of this application shall be included in the protection scope of this application.

CLAIMS

1. An auxiliary device for building interior decoration, characterized by comprising:

at least two expansion joints vertically propped between two indoor walls (11);

a plurality of cross bars (9), fixed between two expansion joints, are used as a keel bracket of the ceiling frame;

a plurality of vertical bars (10) are fixed between two indoor walls as another keel bracket of the ceiling frame;

the vertical bars (10) and the cross bars (9) are staggered to form the ceiling frame, and the gusset plates (3) are placed in the grid of the ceiling frame.

2. The auxiliary device for building interior decoration according to claim 1, wherein the expansion joint comprises:

a main section (4), which is a straight rod;

an auxiliary section (6), which is a straight rod and is telescopically connected with the main section (4);

a plurality of mounting holes (5), which are uniformly arranged on the main section (4) and the auxiliary section (6); both ends of the cross bar (9) are connected to the mounting hole (5) between the two expansion joints.

3. The auxiliary device for building interior decoration according claim 2, characterized in that both the main section (4) and the auxiliary section (6) are both hollow tubes with a wall thickness of 2.0-3.5 mm.

4. The auxiliary device for building interior decoration according to claim 1 or 2, characterized in that the vertical bar (10) and the cross bar (9) are both hollow tubes with a wall thickness of 1.0-2.5 mm; and the two ends are provided with connectors corresponding to the expansion joints.

5. The auxiliary device for building interior decoration according to claim 1 or 2, characterized in that the vertical bar (10) and the cross bar (9) are both sheets with a thickness of 2.5-4.5 mm; and the two ends are provided with connectors corresponding to the expansion joints.

6. The auxiliary device for building interior decoration according to claim 1, characterized by further comprising:

a plurality of right-angle shoulder-lifting structures (12) which are uniformly arranged on the outer side surfaces of the vertical bar (10) and the cross bar (9); two adjacent vertical bars (10) and right-angle shoulder-lifting structures (12) adjacent to the cross bars (9) form a grid frame unit;

the gusset plate (3) is placed in the grid frame unit.

7. The auxiliary device for building interior decoration according to claim 2, characterized by further comprising:

a threaded hole arranged on one of the main section (4) or the auxiliary section (6);

the screw (7) is arranged on that other of the main section (4) or the auxiliary section (6);

the screw (7) is fitted into the threaded hole to telescopically connect the main section (4) and the auxiliary section (6).

8. The auxiliary device for building interior decoration according to claim 7, characterized by further comprising:

a positioning piece (8) which is arranged on the end face of the main section (4) and/or the auxiliary section (6) on the side far from the joint; when that expansion joint is tightly adjusted, two ends of the expansion joint are limited between two wall surfaces by the positioning piece (8).

9. The auxiliary device for building interior decoration according to claim 8, characterized by further comprising:

a positioning hole arranged on the end face of the main section (4) and/or the auxiliary section (6) on the side far from the joint;

a positioning connecting rod arranged on the positioning piece (8);

a positioning connecting rod fitted in the positioning hole to fix the positioning piece (8) on the end face of the main section (4).

10. The auxiliary device for building interior decoration according to claim 7, characterized by further comprising:

a first lock nut (13), which is fitted on the screw (7) and used for locking the main section (4);

a second lock nut (14), which is fitted on the screw (7) for locking the auxiliary section (6);

the first lock nut (13) and the second lock nut (14) have the same thread or the opposite thread.

PATENTANSPRÜCHE

1. Hilfsvorrichtung für die Innendekoration von Gebäuden, dadurch gekennzeichnet, dass welche umfasst:
mindestens zwei Dehnungsfugen, die vertikal zwischen zwei Innenwänden (11) angebracht sind;
eine Vielzahl von Querstäben (9), die zwischen zwei Dehnungsfugen befestigt sind und als Kielträger des Deckenrahmens verwendet werden;
eine Vielzahl von vertikalen Stangen (10), die zwischen zwei Innenwänden befestigt sind und als ein weiterer Kielträger des Deckenrahmens dienen;
die vertikalen Stangen (10) und die Querstangen (9) sind versetzt angeordnet, um den Deckenrahmen zu bilden, und die Knotenbleche (3) sind in dem Gitter des Deckenrahmens angeordnet.

2. Hilfsvorrichtung für die Innendekoration von Gebäuden nach Anspruch 1, wobei die Dehnungsfuge Folgendes umfasst:
einen Hauptabschnitt (4), der eine gerade Stange ist;
einen Hilfsabschnitt (6), der eine gerade Stange ist und teleskopisch mit dem Hauptabschnitt (4) verbunden ist;
eine Vielzahl von Montagelöchern (5), die gleichmäßig auf dem Hauptabschnitt (4) und dem Hilfsabschnitt (6) angeordnet sind; beide Enden der Querstange (9) sind mit dem Montageloch (5) zwischen den beiden Kompensatoren verbunden.

3. Hilfsvorrichtung für die Innendekoration von Gebäuden nach Anspruch 2, dadurch gekennzeichnet, dass sowohl der Hauptabschnitt (4) als auch der Hilfsabschnitt (6) Hohlrohre mit einer Wandstärke von 2,0-3,5 mm sind.

4. Hilfsvorrichtung für die Innendekoration von Gebäuden nach Anspruch 1 oder 2, dadurch gekennzeichnet, dass sowohl die vertikale Stange (10) als auch die Querstange (9) Hohlrohre mit einer Wandstärke von 1,0-2,5 mm sind; und die beiden Enden sind mit den Dehnungsfugen entsprechenden Verbindungsstücken versehen.

5. Hilfsvorrichtung für die Innendekoration von Gebäuden nach Anspruch 1 oder 2, dadurch gekennzeichnet, dass die vertikale Stange (10) und die Querstange (9) beide aus Blechen mit einer Dicke von 2,5 bis 4,5 mm bestehen, und die beiden Enden sind mit den Dehnungsfugen entsprechenden Verbindungsstücken versehen.

6. Hilfsvorrichtung für die Innendekoration von Gebäuden nach Anspruch 1, dadurch gekennzeichnet, dass welche ferner umfasst

eine Vielzahl von rechtwinkligen Schulterheben-Strukturen (12), die gleichmäßig auf den äußeren Seitenflächen der vertikalen Stangen (10) und der Querstangen (9) angeordnet sind; zwei benachbarte vertikale Stangen (10) und rechtwinklige Schulterheben-Strukturen (12), die an die Querstangen (9) angrenzen, bilden eine Gitterrahmeneinheit;

das Knotenblech (3) ist in der Einheit von Gitterrahmen angeordnet.

7. Hilfsvorrichtung für die Innendekoration von Gebäuden nach Anspruch 2, dadurch gekennzeichnet, dass sie ferner umfasst:

ein Gewindeloch, das an einem der Hauptabschnitte (4) oder dem Hilfsabschnitt (6) angeordnet ist;

die Schraube (7) ist an dem anderen der Hauptabschnitte (4) oder der Hilfsabschnitt (6) angeordnet;

die Schraube (7) wird in das Gewindeloch eingepasst, um den Hauptabschnitt (4) und den Hilfsabschnitt (6) teleskopartig zu verbinden.

8. Hilfsvorrichtung für die Innendekoration von Gebäuden nach Anspruch 7, dadurch gekennzeichnet, dass welche ferner umfasst

ein Positionierungsstück (8), das an der fugenabgewandten Endfläche des Hauptabschnitts (4) und/oder des Hilfsabschnitts (6) angeordnet ist; wenn diese Dehnungsfuge fest eingestellt ist, werden zwei Enden der Dehnungsfuge zwischen zwei Wandflächen durch das Positionierungsstück (8) begrenzt.

9. Hilfsvorrichtung für die Innendekoration von Gebäuden nach Anspruch 8, dadurch gekennzeichnet, dass welche ferner umfasst:
eine Positionierungsbohrung, die an der fugenabgewandten Endfläche des Hauptabschnitts (4) und/oder des Hilfsabschnitts (6) angeordnet ist;
eine Verbindungsstange zur Positionierung, die an dem Positionierungsstück (8) angeordnet ist;
eine Verbindungsstange zur Positionierung, die in die Positionierungsbohrung eingepasst ist, um das Positionierungsstück (8) an der Endfläche des Hauptabschnitts (4) zu befestigen.

10. Hilfsvorrichtung für die Innendekoration von Gebäuden nach Anspruch 7, dadurch gekennzeichnet, dass welche ferner umfasst:
eine erste Kontermutter (13), die auf der Schraube (7) angebracht ist und zum Verriegeln des Hauptabschnitts (4) verwendet wird;
eine zweite Kontermutter (14), die auf der Schraube (7) zum Verriegeln des Hilfsabschnitts (6) angebracht ist;
die erste Kontermutter (13) und die zweite Kontermutter (14) haben das gleiche oder das entgegengesetztes Gewinde.

FIGURES

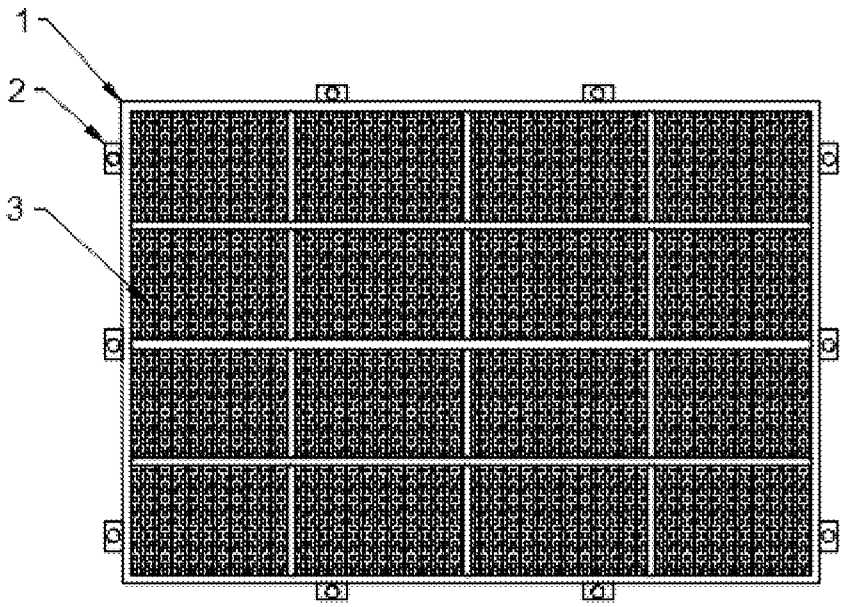

Fig. 1

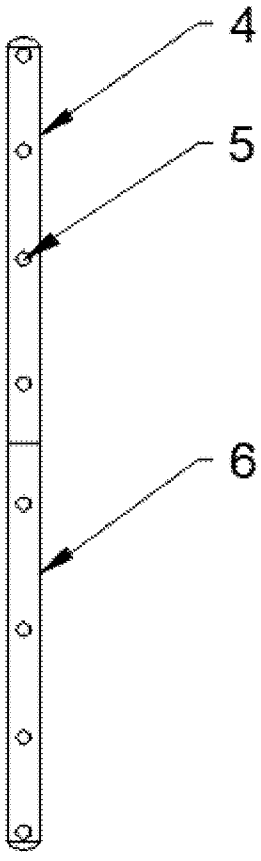

Fig. 2

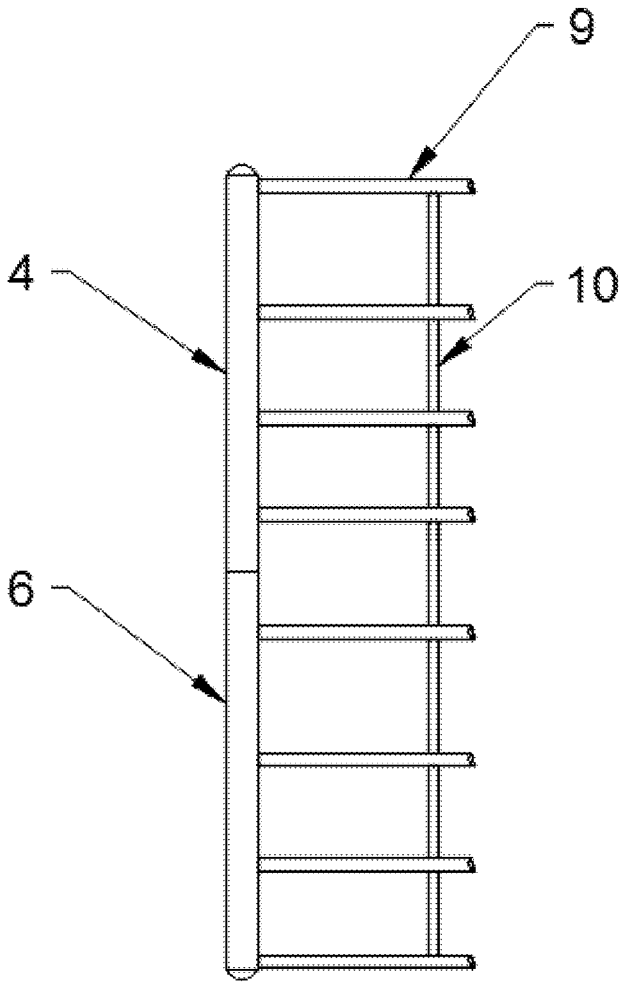

Fig. 3

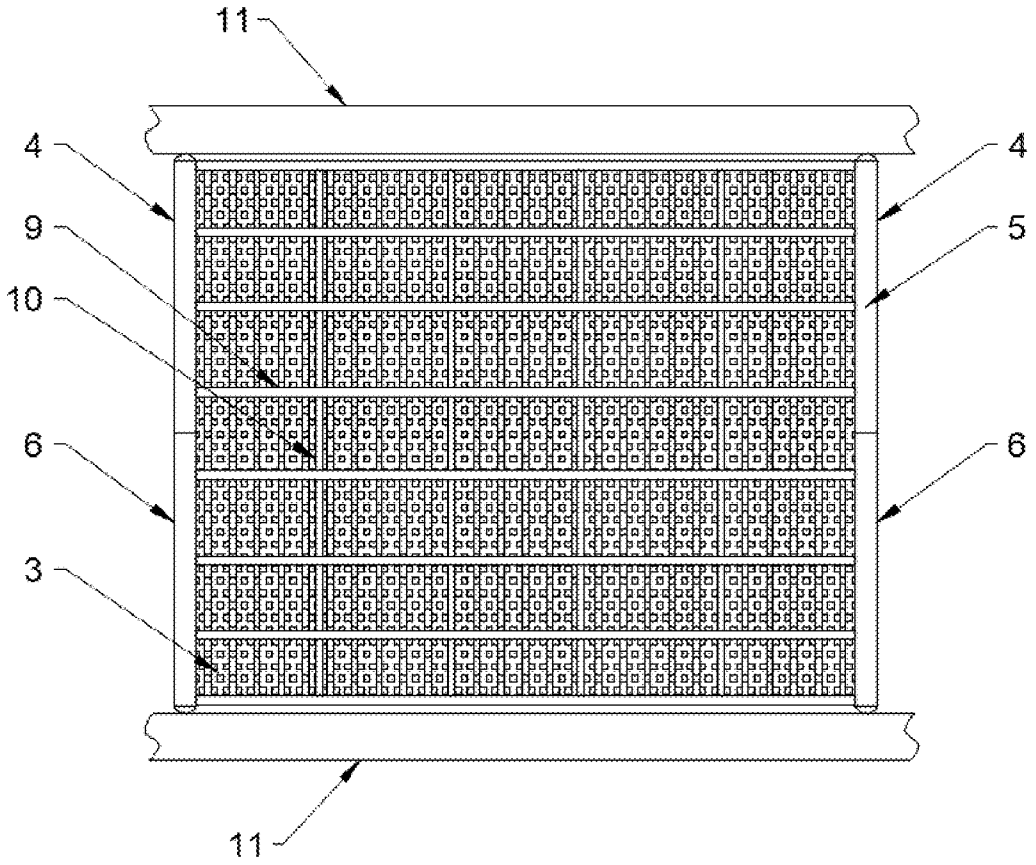

Fig. 4

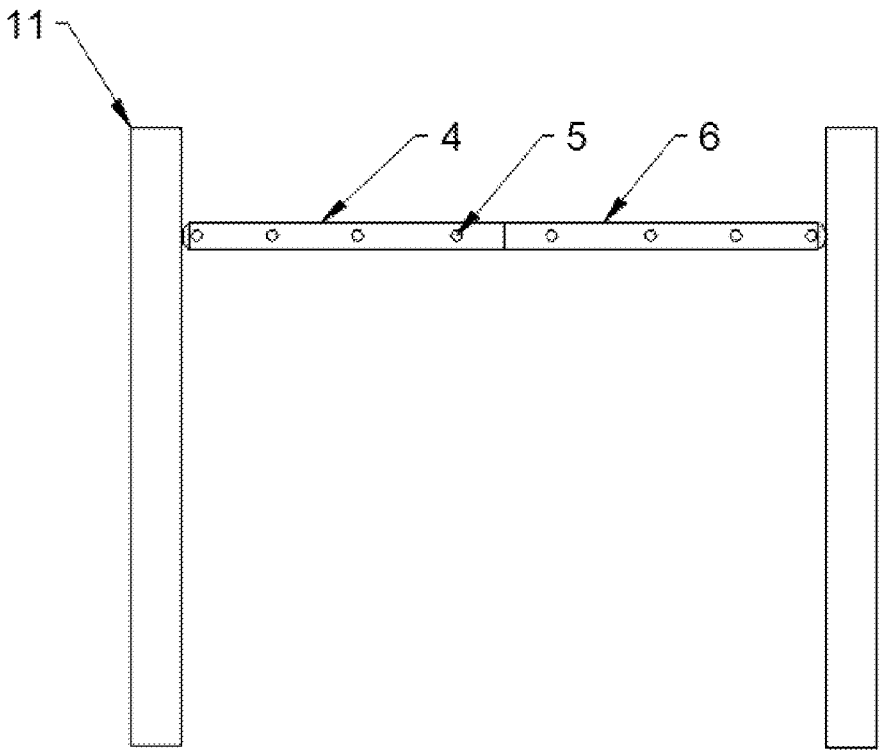

Fig. 5

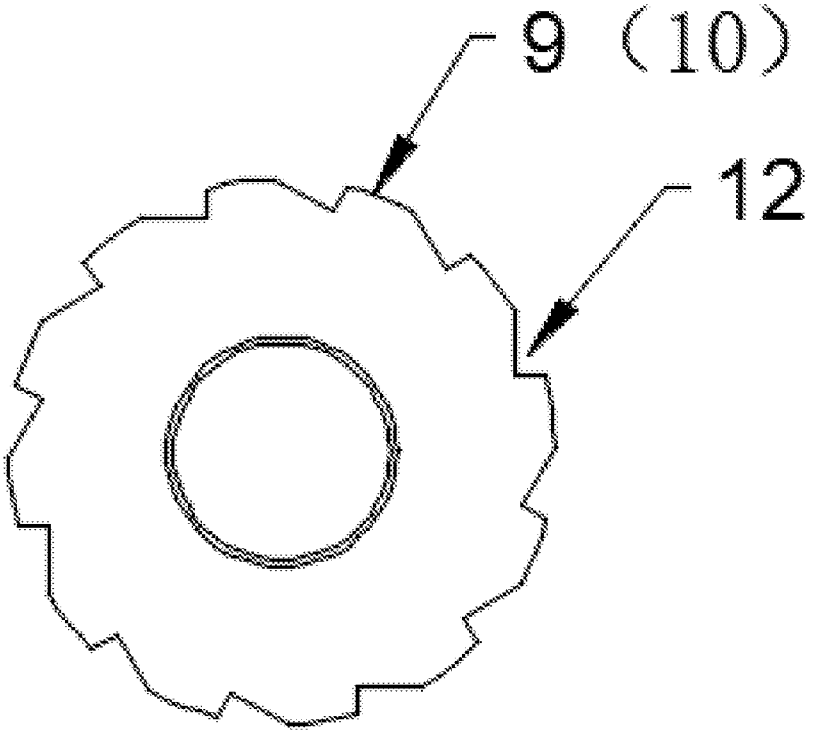

Fig. 6

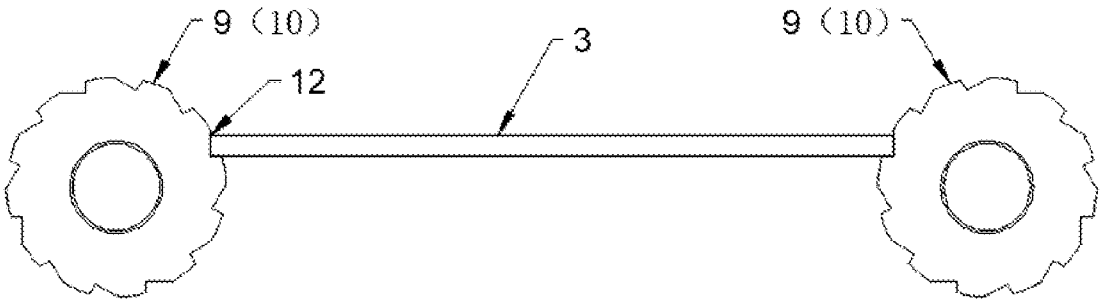

Fig. 7

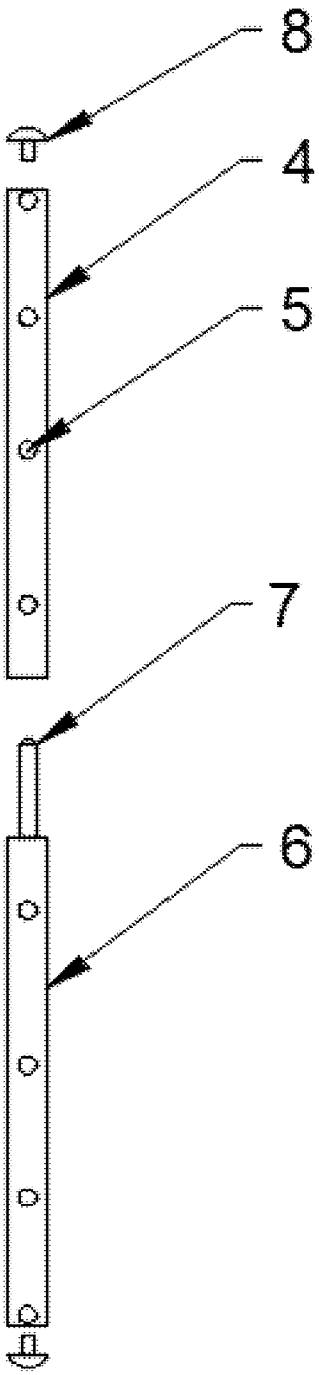

Fig. 8

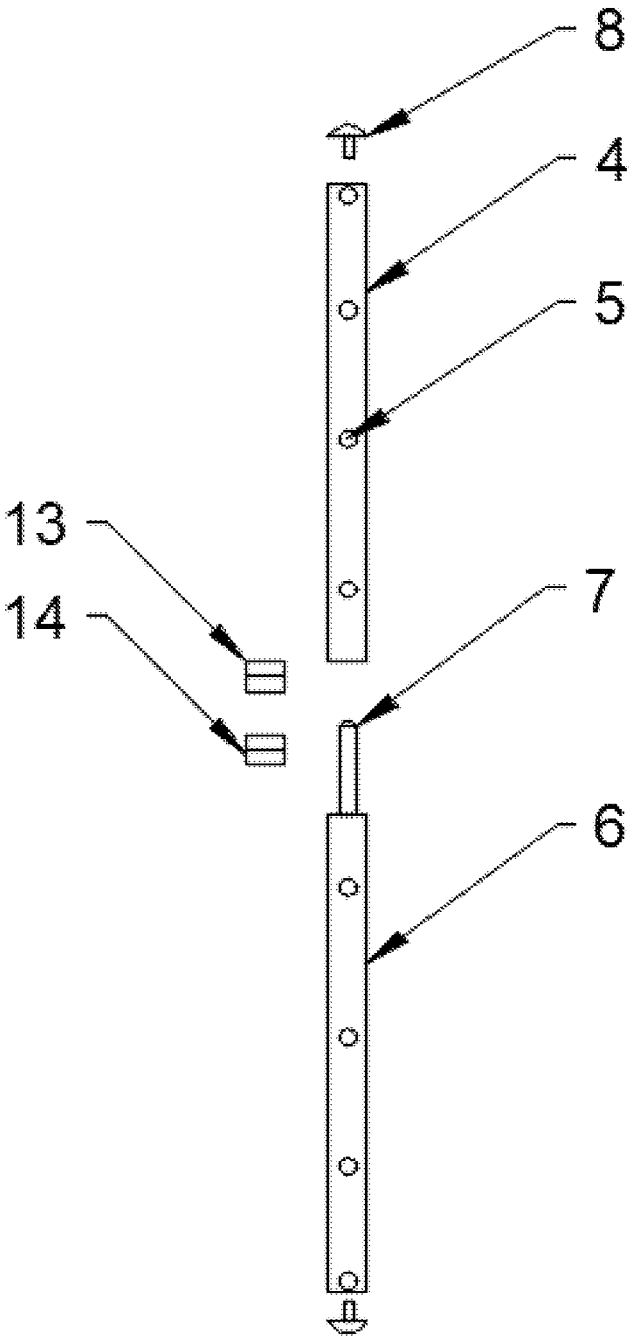

Fig. 9