US 20030109868A1

(19) **United States**

(12) **Patent Application Publication** (10) **Pub. No.: US 2003/0109868 A1**

Chin et al. (43) **Pub. Date: Jun. 12, 2003**

(54) **MEDICAL INSTRUMENT POSITIONING TOOL AND METHOD**

(75) Inventors: **Sing Fatt Chin**, Fremont, CA (US); **Dany Berube**, Fremont, CA (US); **Dinesh I. Mody**, Pleasanton, CA (US); **Nancy Norris**, Fremont, CA (US)

Correspondence Address:
AFX INC.
47929 FREMONT BLVD
FREMONT, CA 94538 (US)

(73) Assignee: **AFX, INC.**, FREMONT, CA

(21) Appl. No.: **10/301,975**

(22) Filed: **Nov. 21, 2002**

Related U.S. Application Data

(63) Continuation of application No. 09/872,652, filed on Jun. 1, 2001, which is a continuation-in-part of application No. 09/751,472, filed on Dec. 29, 2000.

Publication Classification

(51) **Int. Cl.**[7] **A61B 18/14**

(52) **U.S. Cl.** **606/41**

(57) **ABSTRACT**

A system and method for positioning a medical instrument at a desired biological target tissue site is provided. The system includes an elongated sheath having a deflectable distal end configured to deflect or otherwise position at least a portion of a medical instrument during a surgical procedure allowing for the placement of the deflected portion adjacent or proximate to a predetermined target tissue surface. The positioning system may be incorporated into the medical instrument. The medical instrument may be an ablation system.

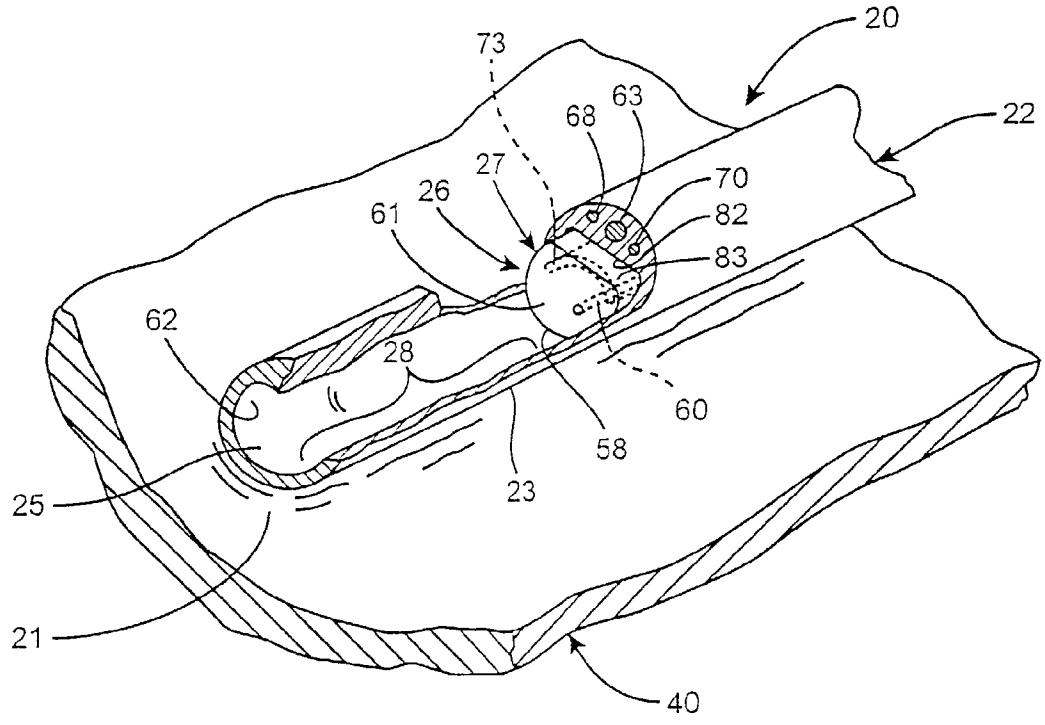

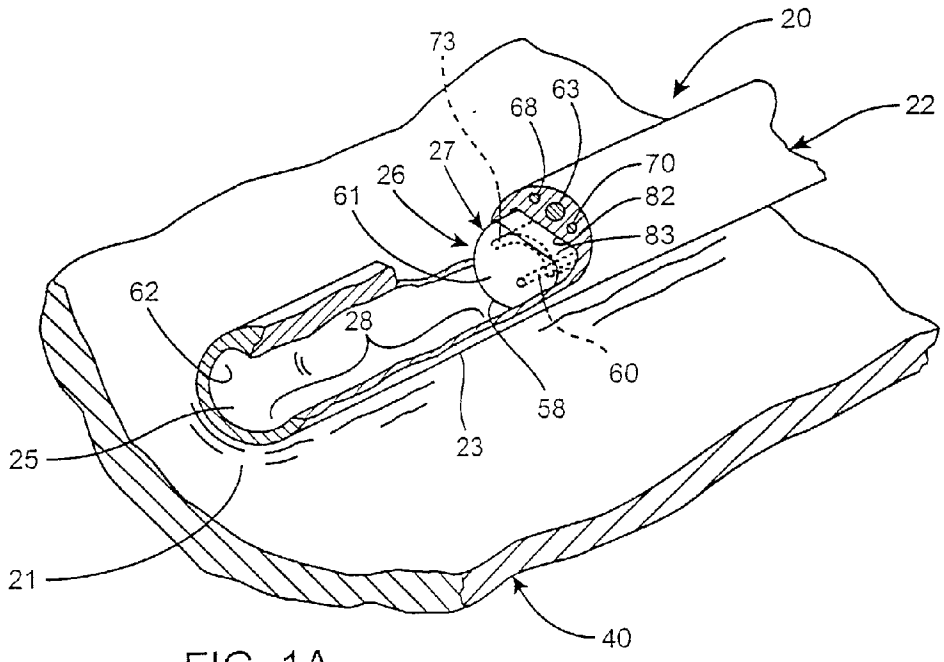
20
73
63
68
22
27
70
26
61
82
83
62
28
60
58
25
23
21
40

FIG. 1A

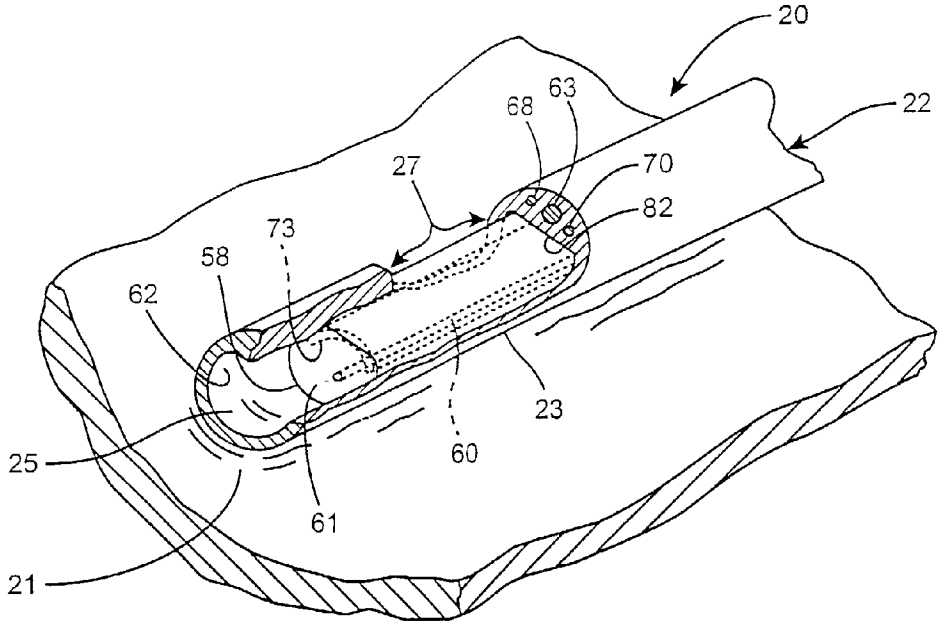
20
63
68
22
27
70
82
73
58
62
23
60
25
61
21

FIG. 1B

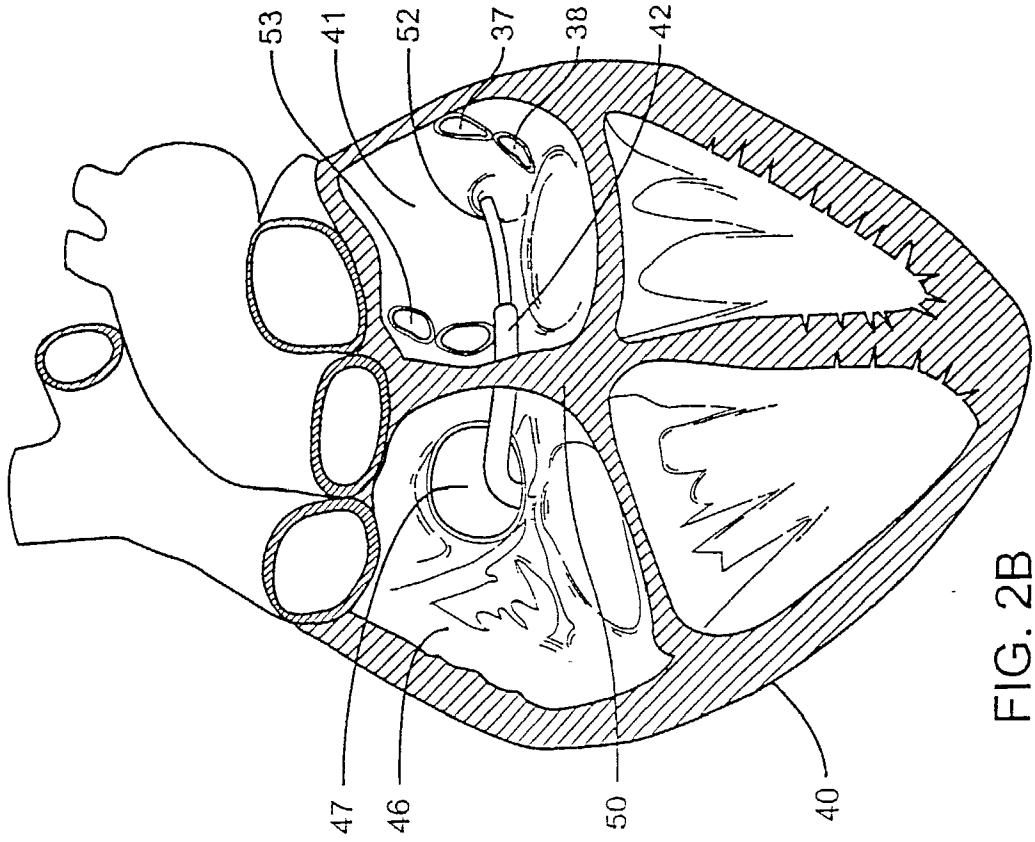

FIG. 2B

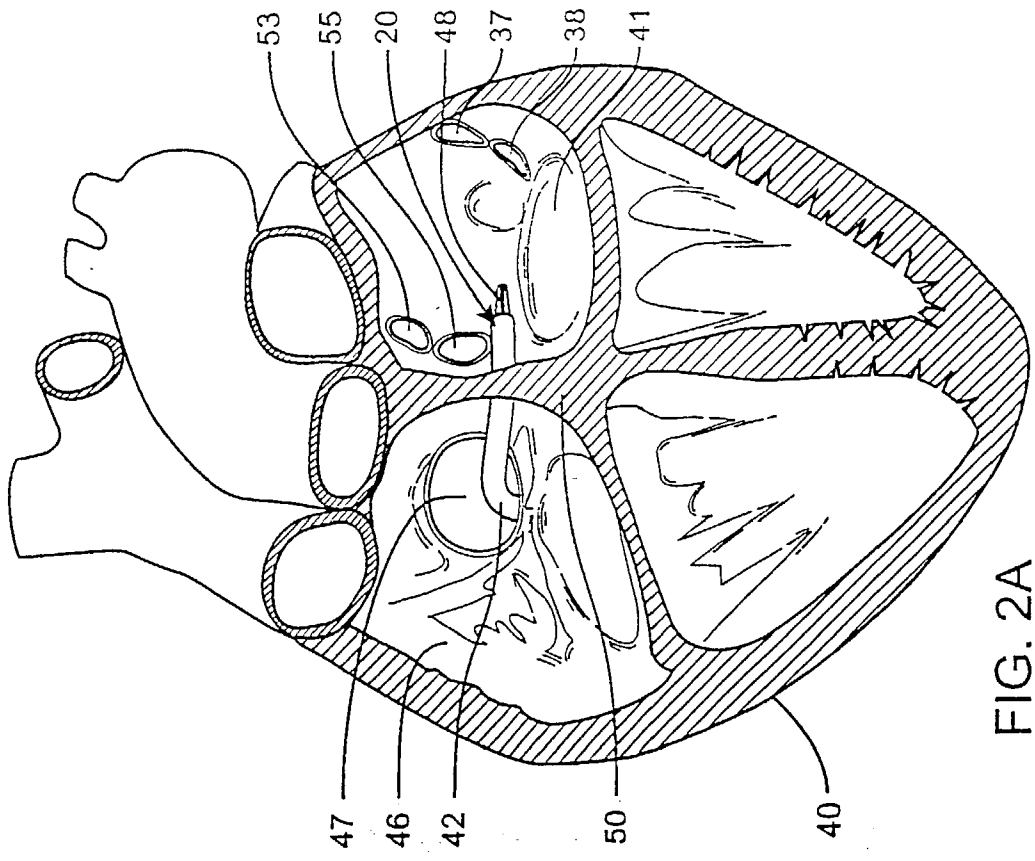

FIG. 2A

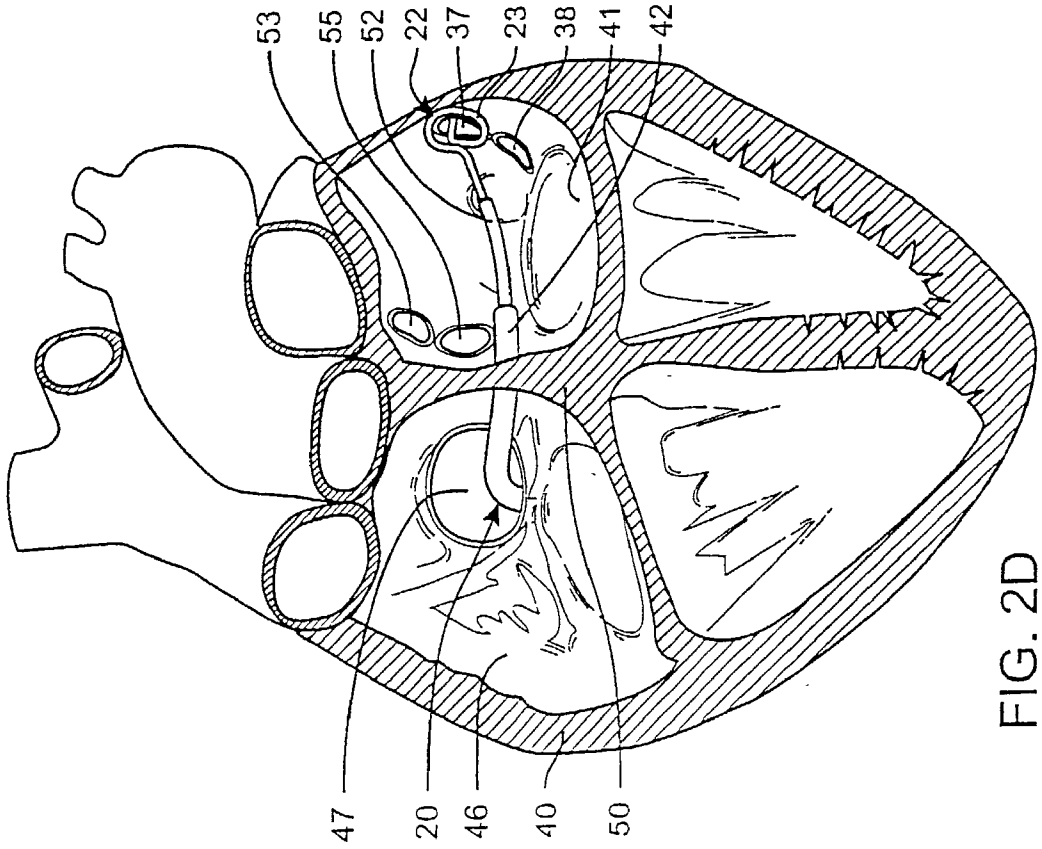
53
55
52
22
37
23
38
41
42
47
20
46
40
50

FIG. 2D

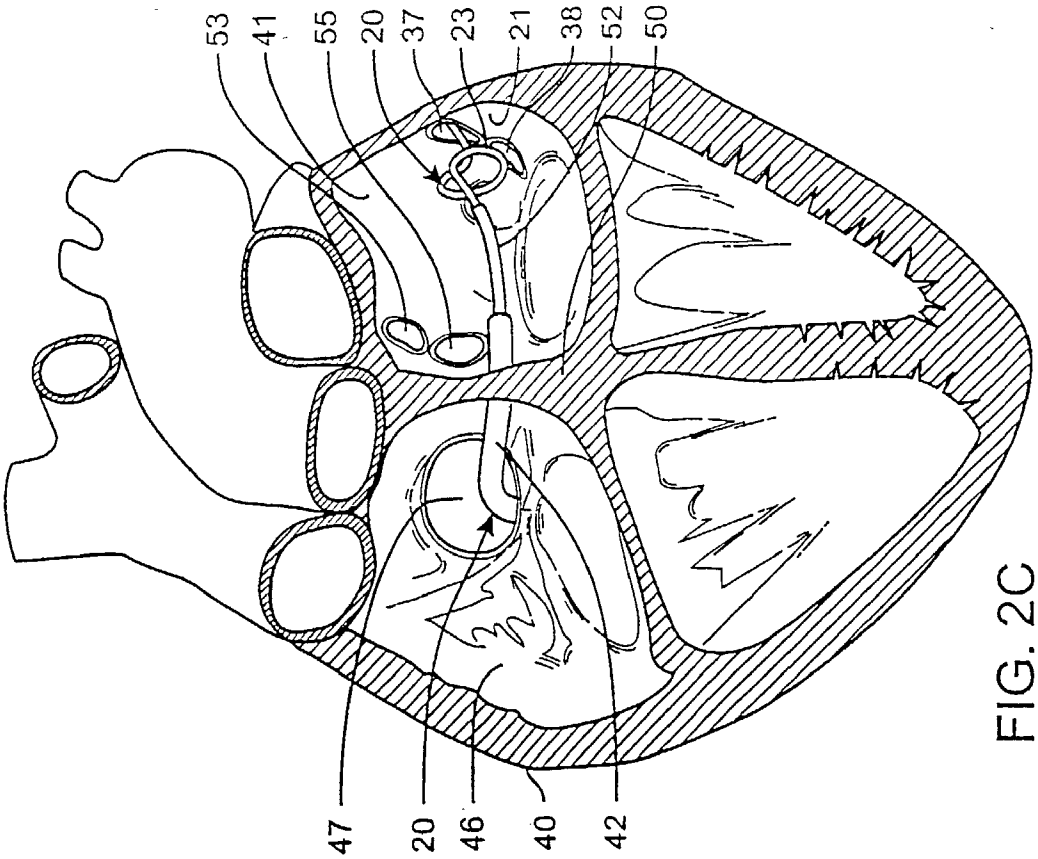
53
41
55
20
37
23
21
38
52
50
47
20
46
40
42

FIG. 2C

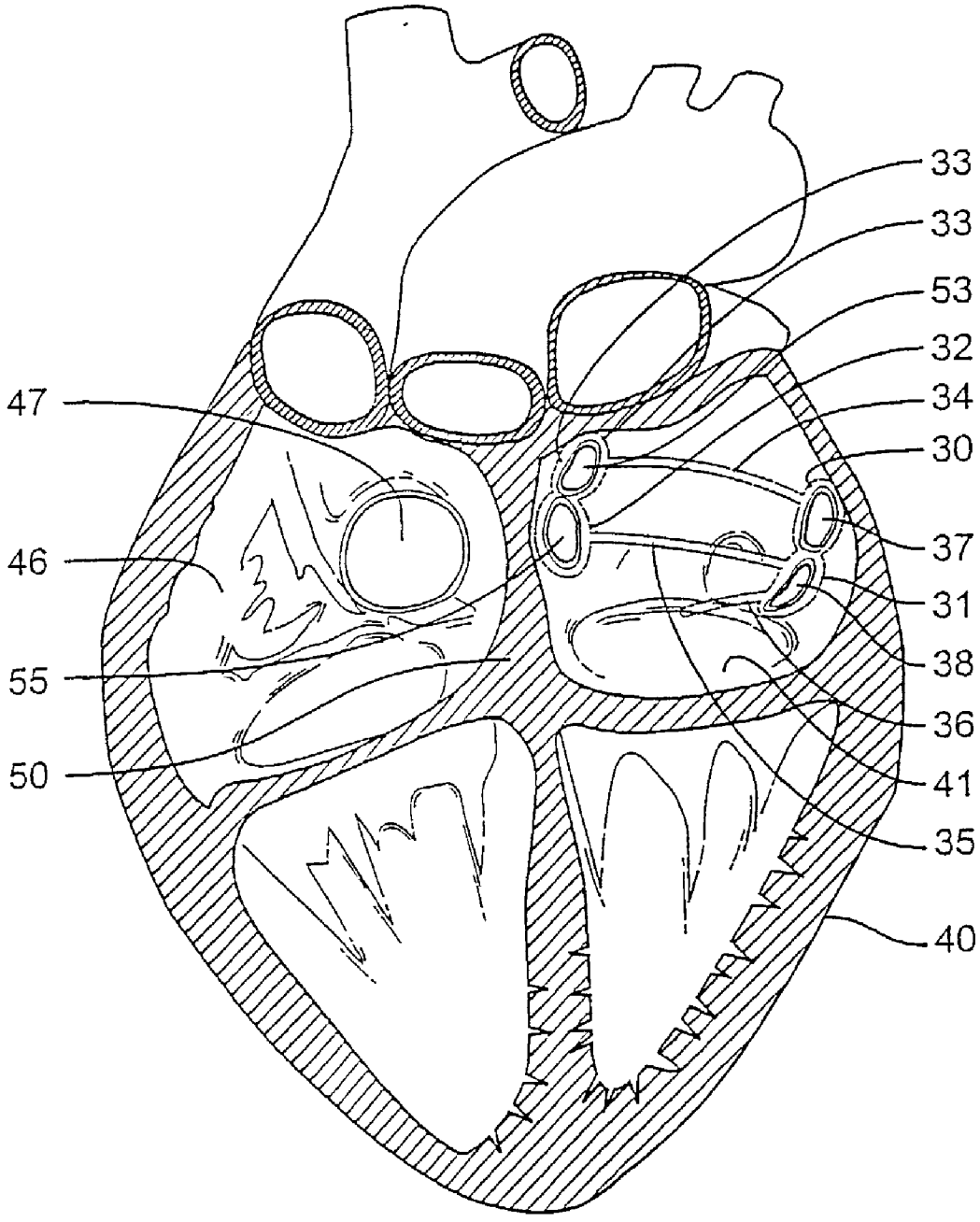

FIG. 3

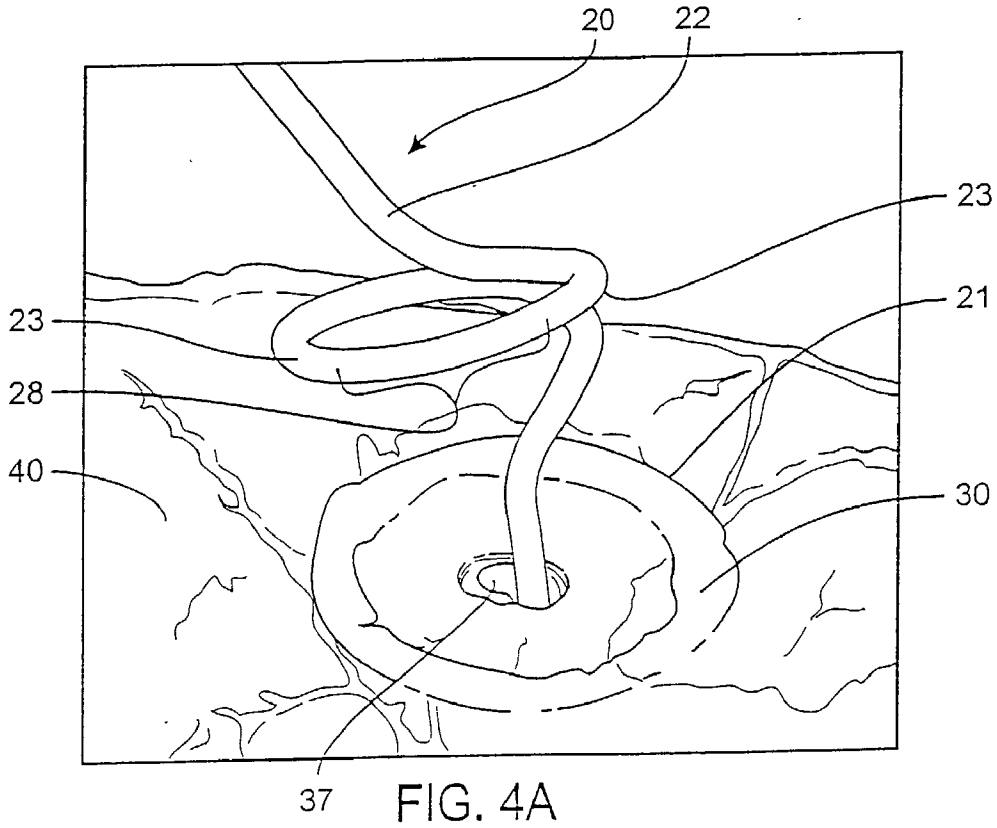

FIG. 4A

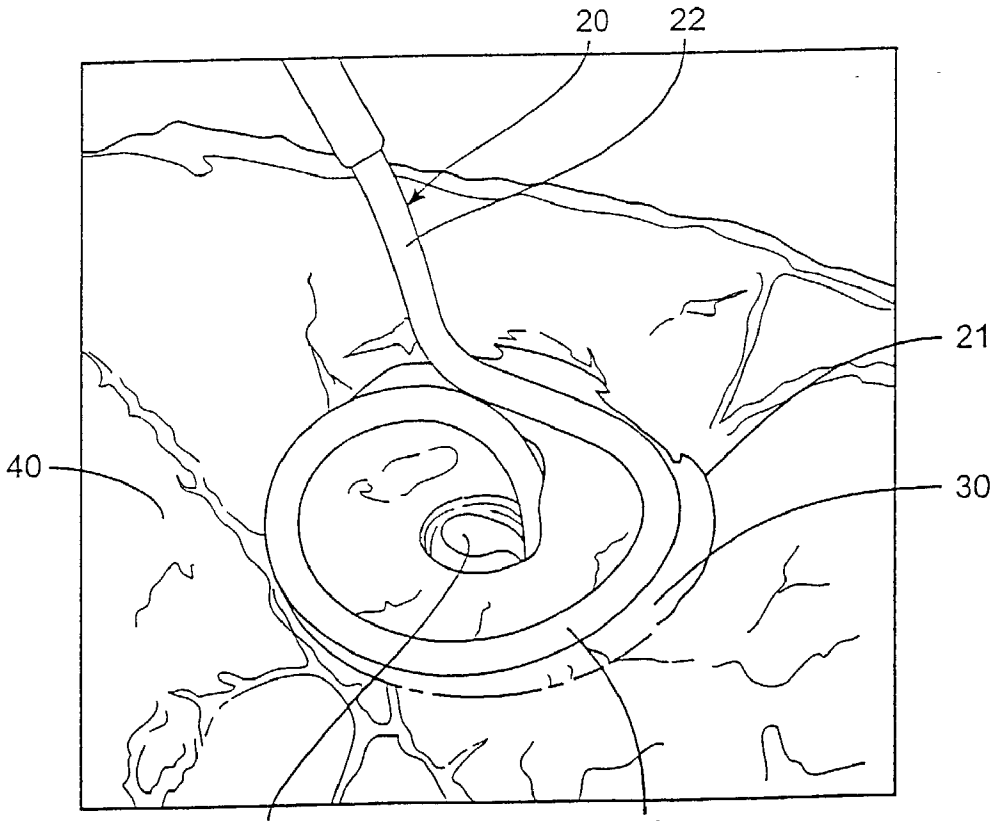

FIG. 4B

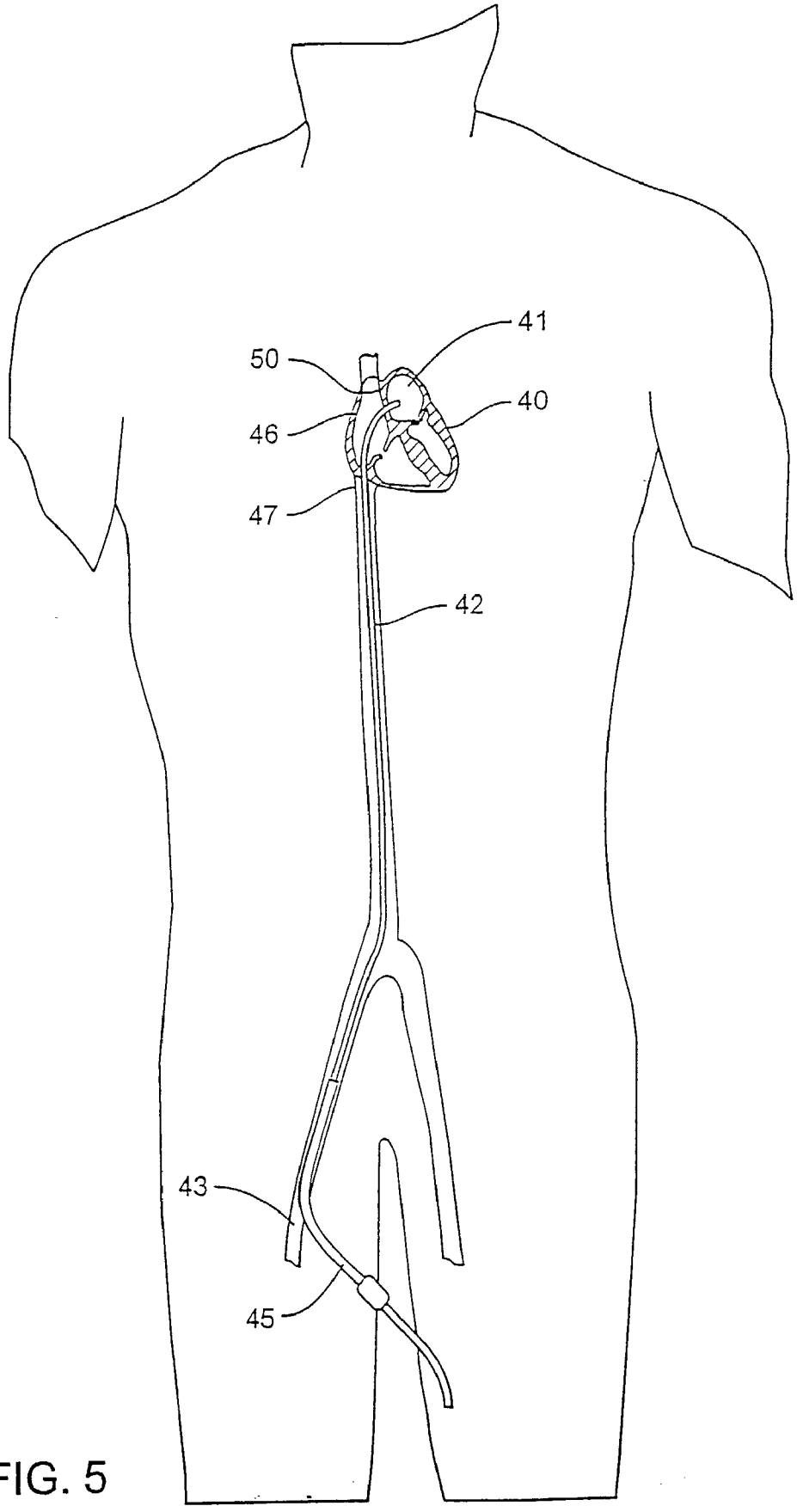

FIG. 5

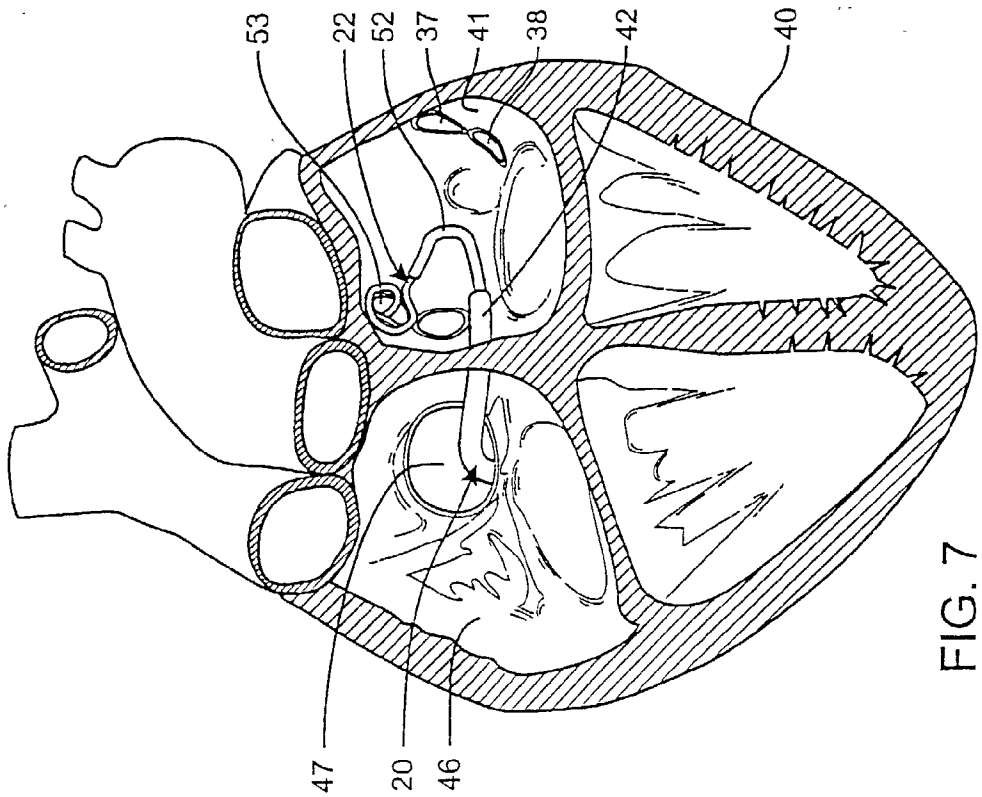

FIG. 7

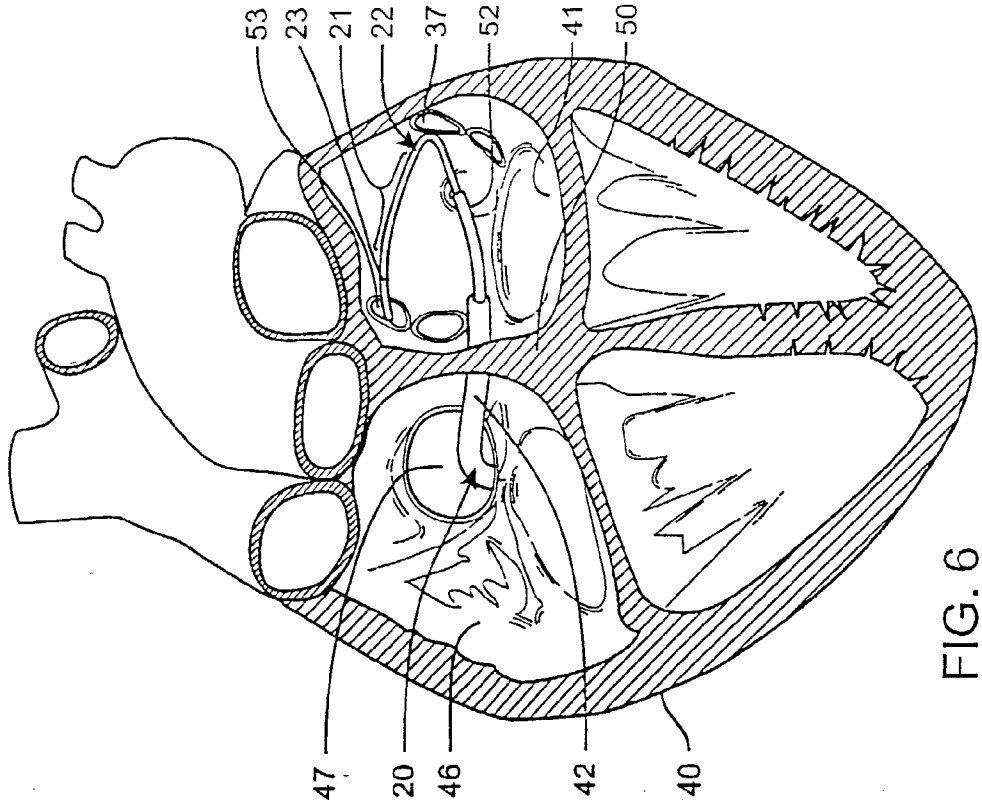

FIG. 6

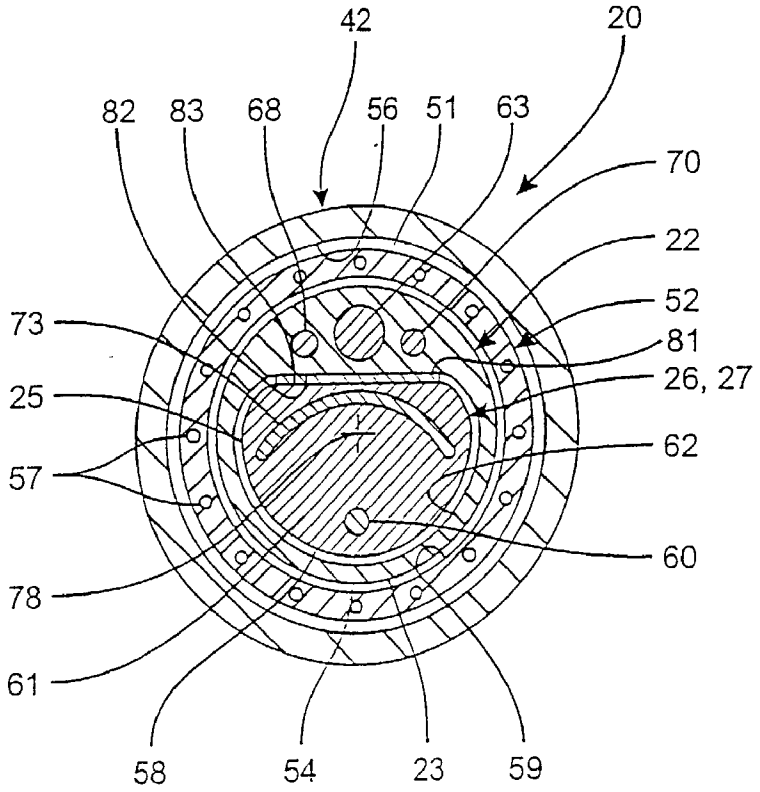
42
20
82
83
68
56
51
63
70
22
52
73
81
26, 27
25
62
57
60
78
61
58
54
23
59

FIG. 8

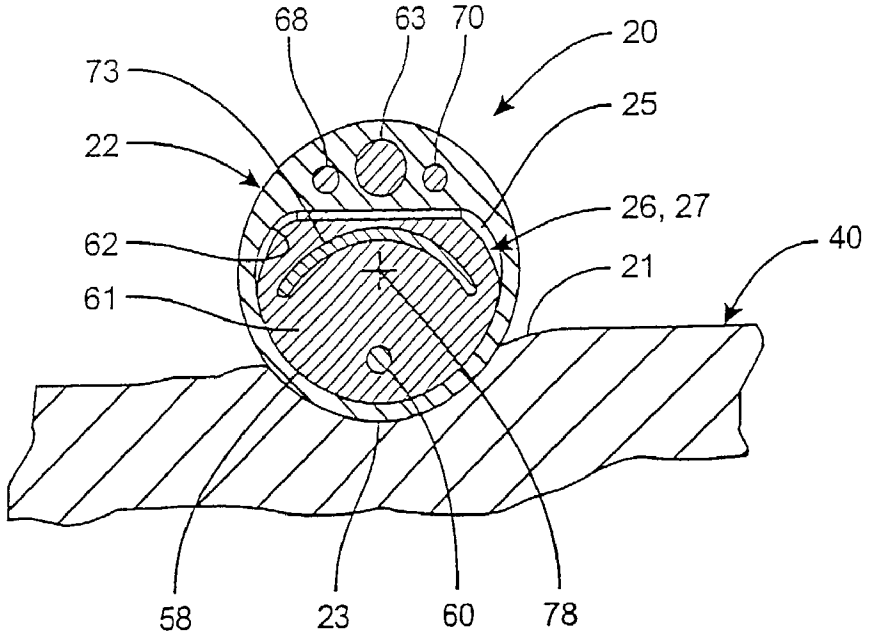
68
63
70
20
73
25
22
26, 27
40
62
21
61
58
23
60
78

FIG. 9

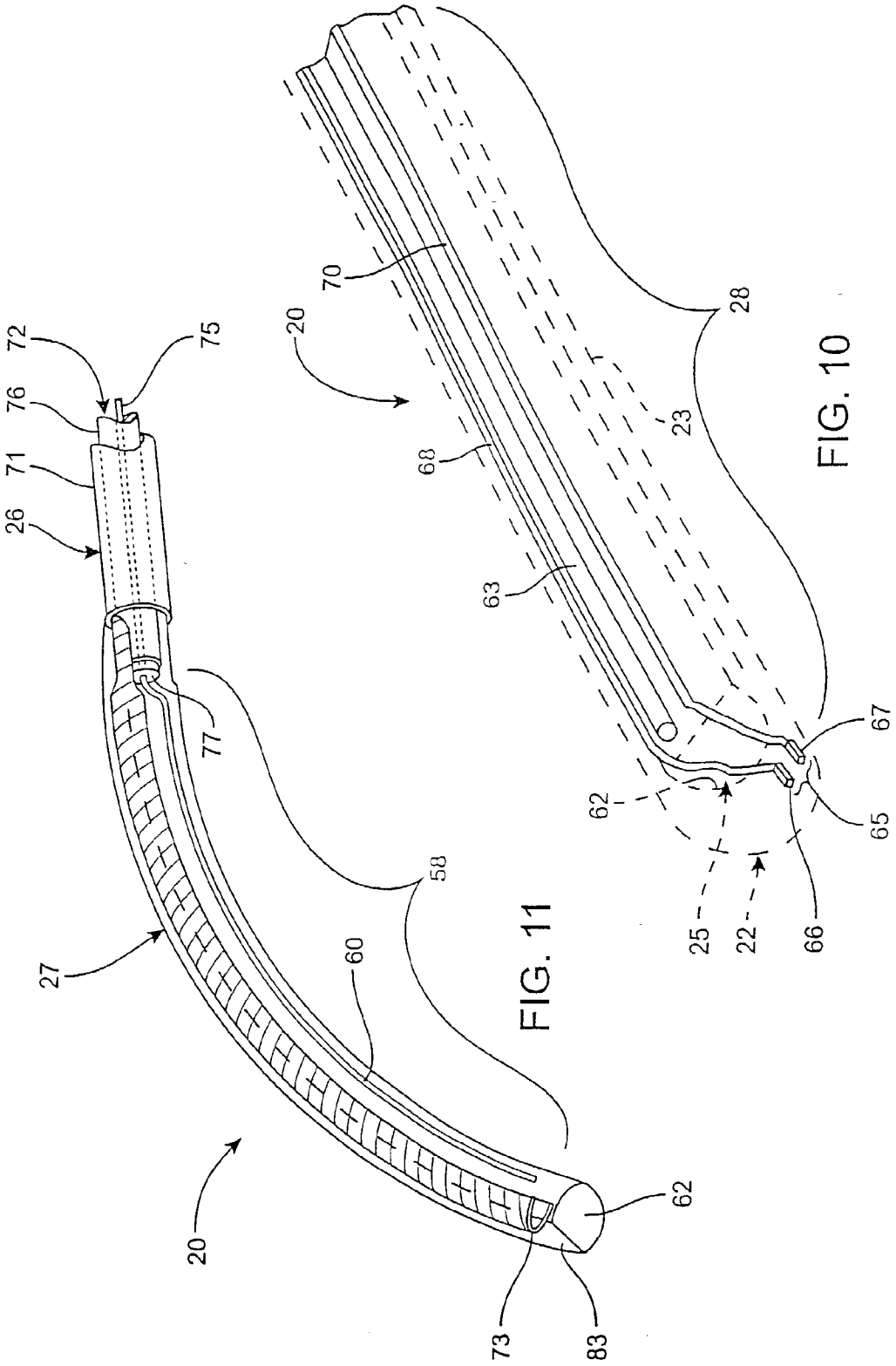
72
75
76
71
26
77
58
27
60
20
62
73
83
70
20
28
68
23
63
67
62
65
25
22
66

FIG. 10

FIG. 11

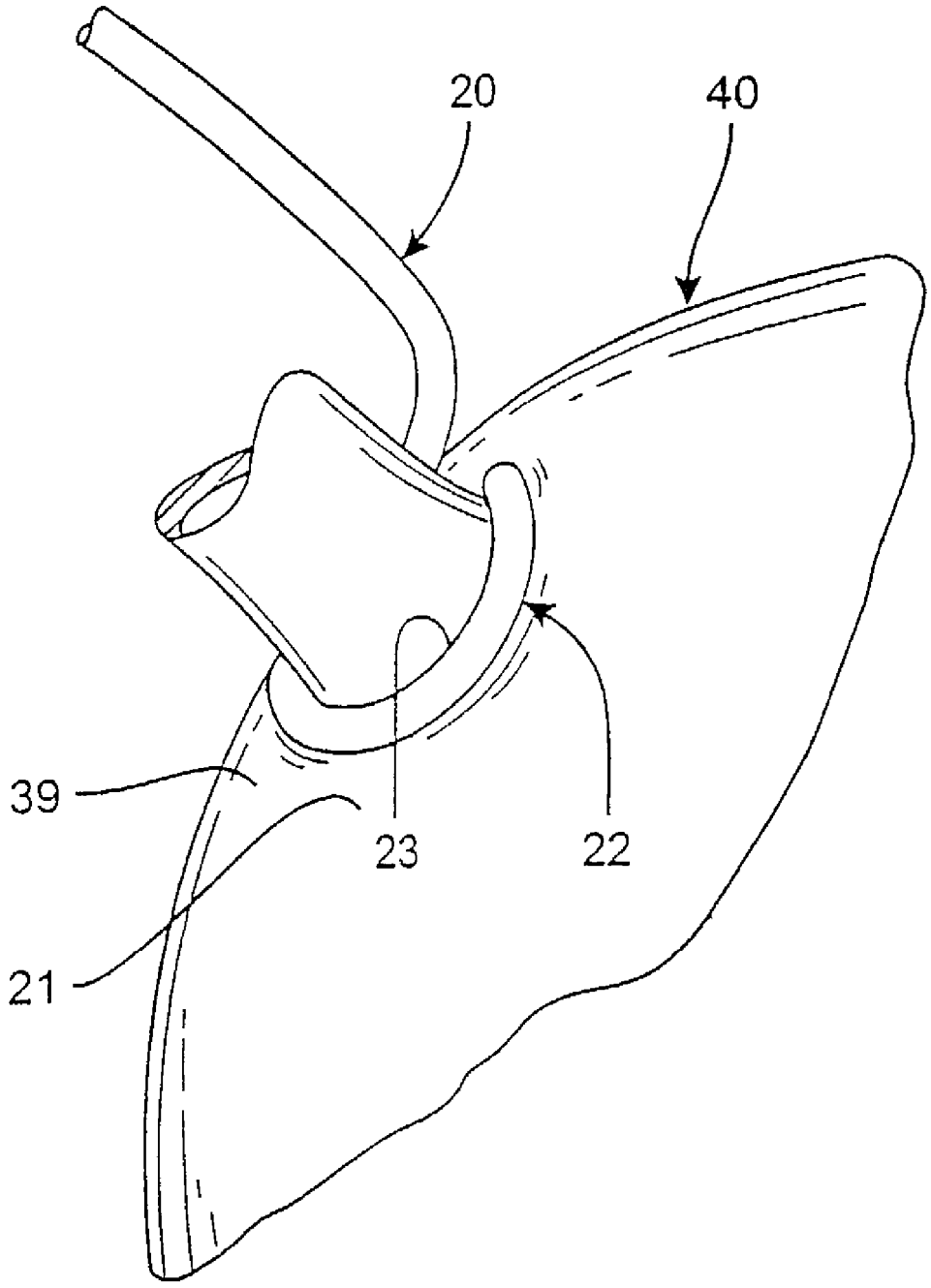

FIG. 12

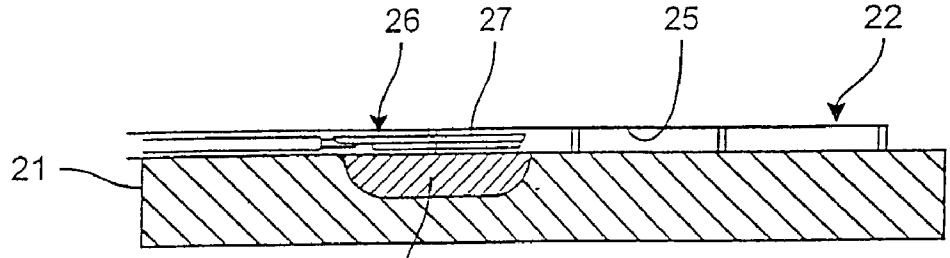

FIG. 13A

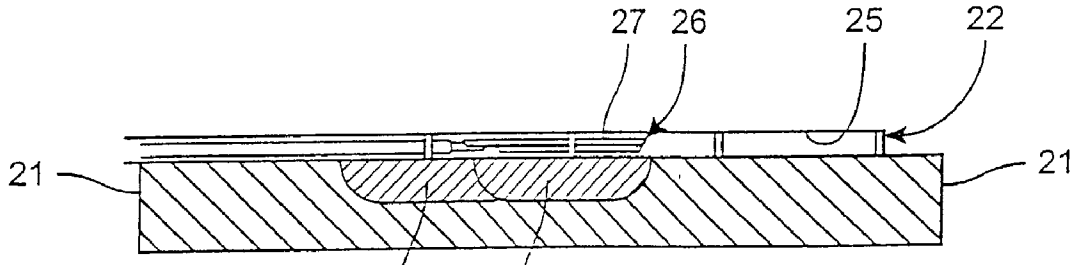

FIG. 13B

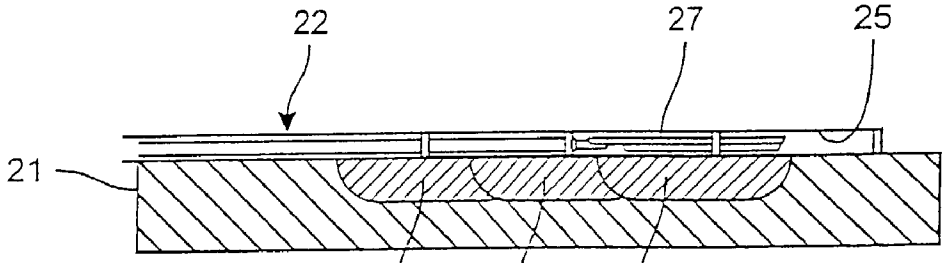

FIG. 13C

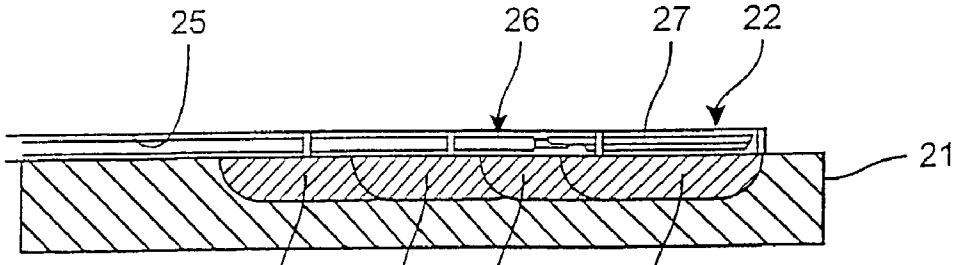

FIG. 13D

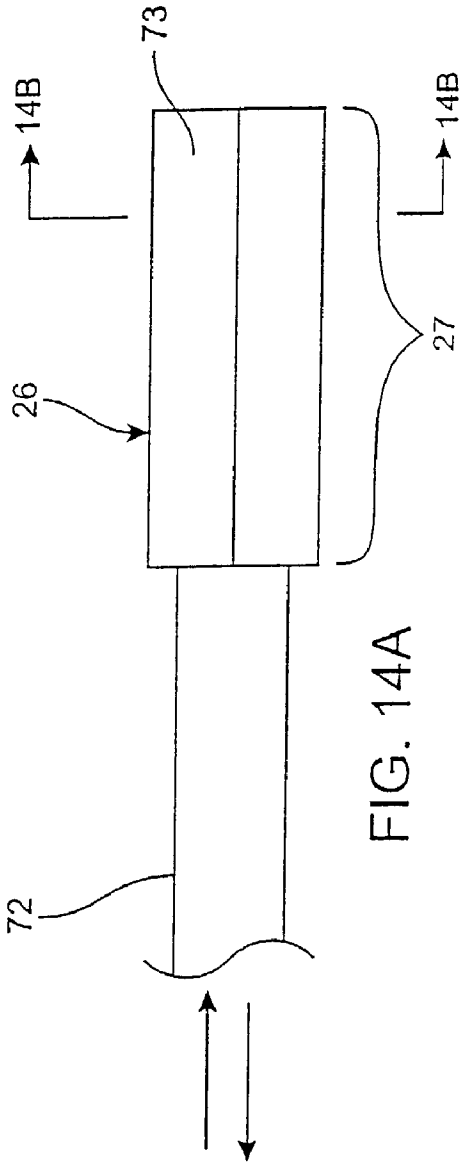

FIG. 14A

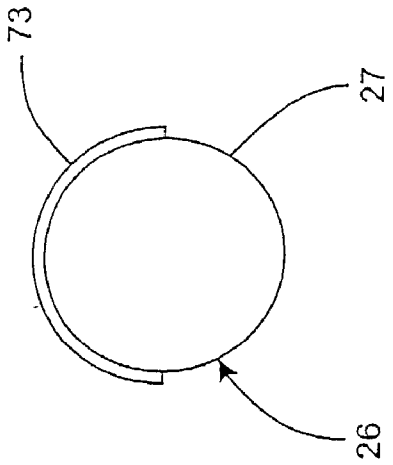

FIG. 14B

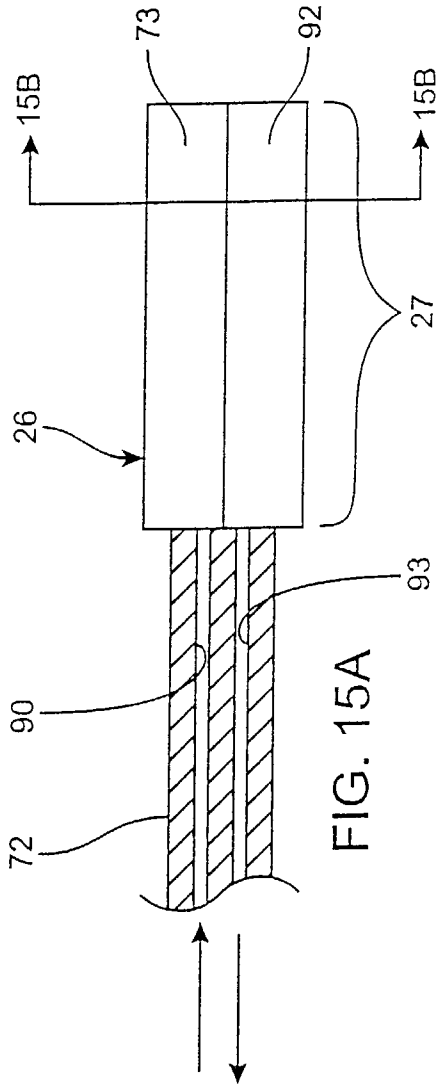

FIG. 15A

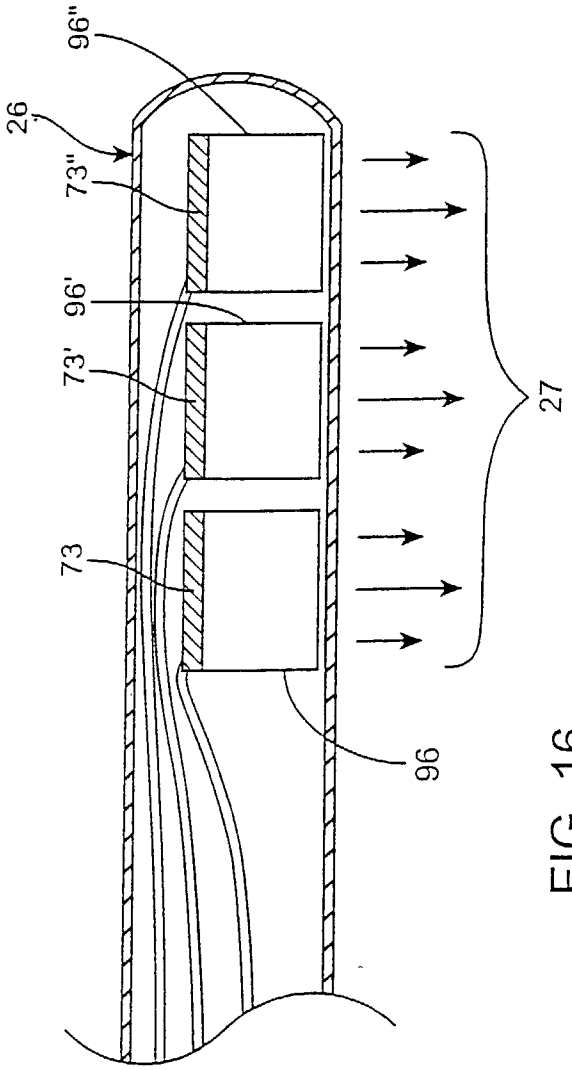

FIG. 16

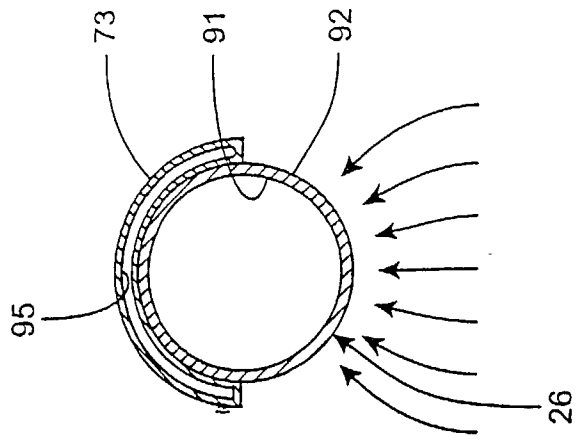

FIG. 15B

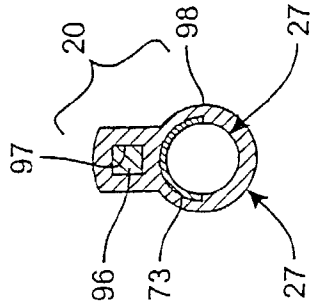

FIG. 19

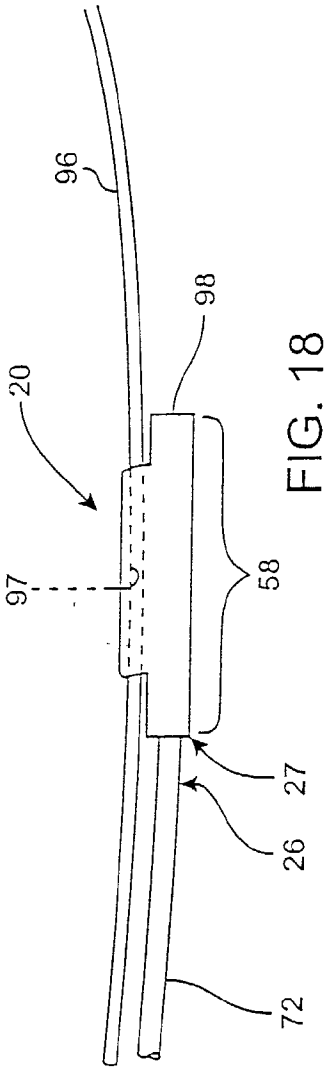

FIG. 18

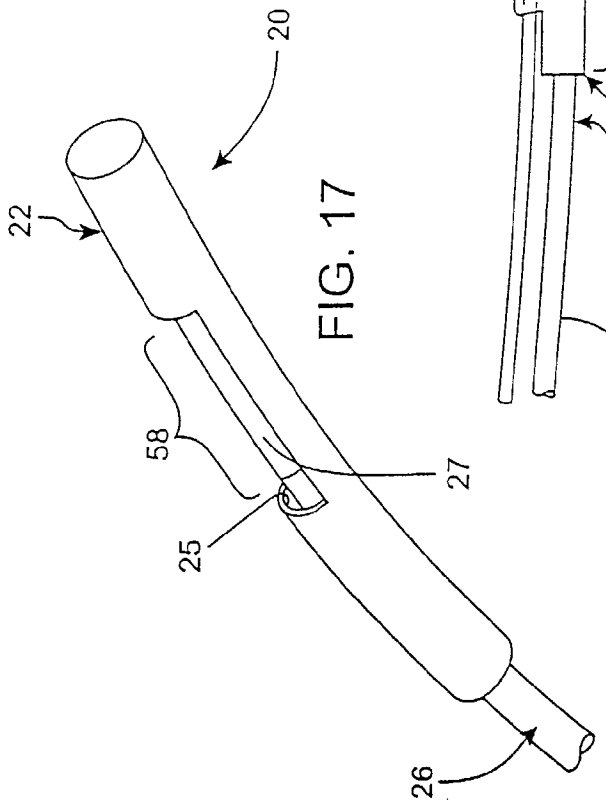

FIG. 17

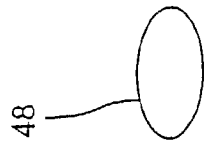

FIG. 20C



FIG. 20B

FIG. 20A

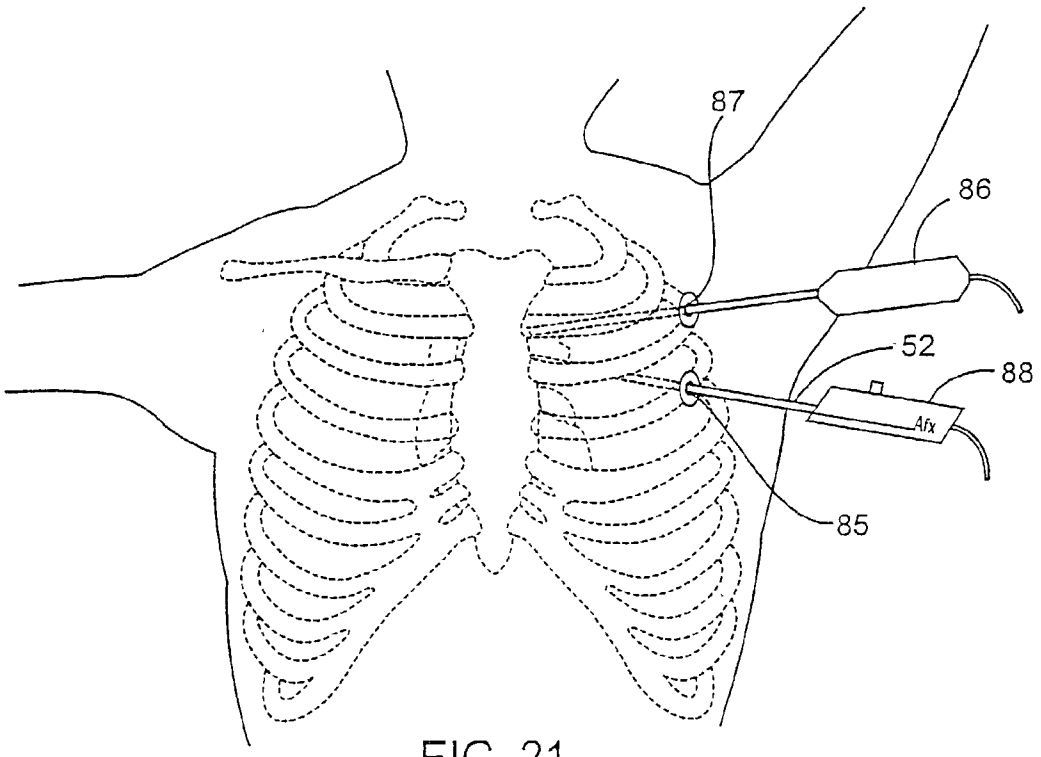

FIG. 21

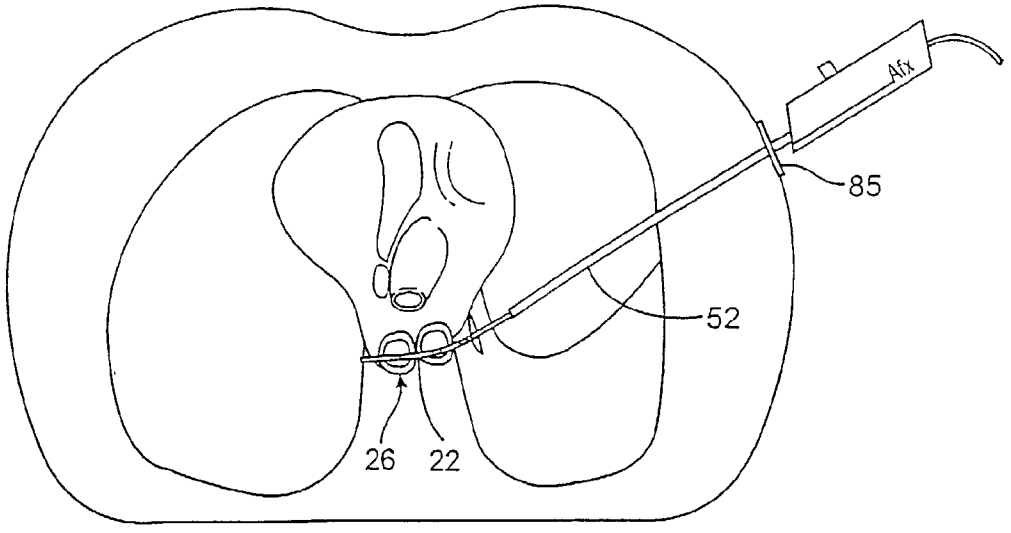

FIG. 22

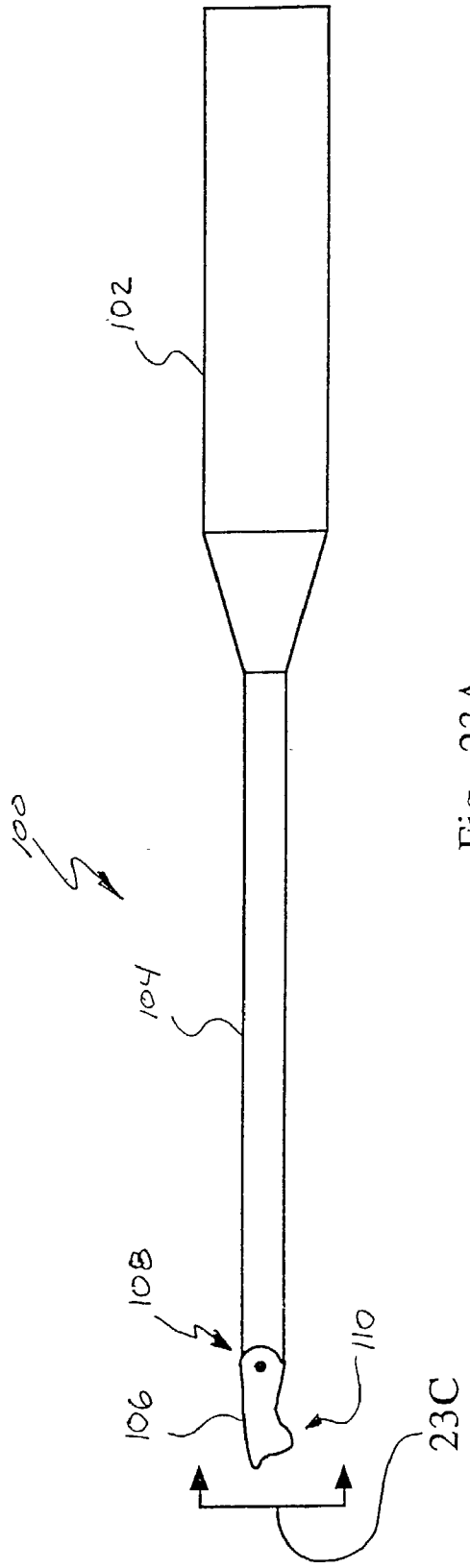

Fig. 23A

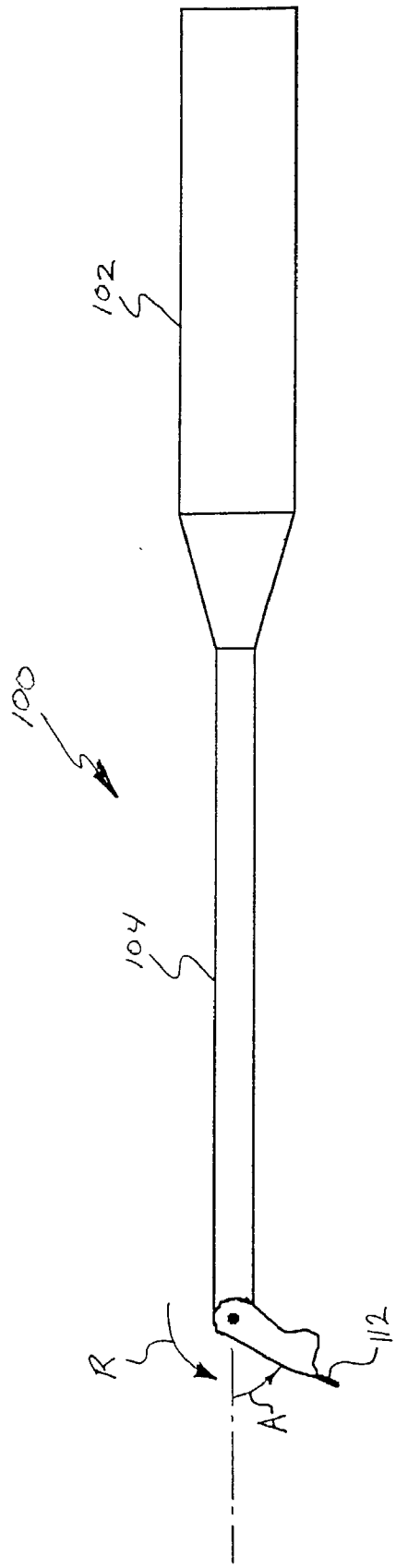

Fig. 23B

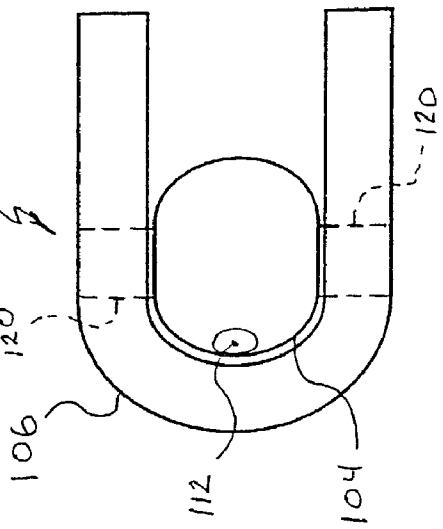

Fig. 23D

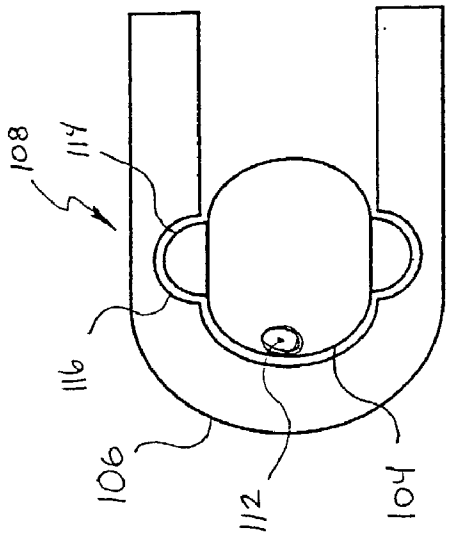

Fig. 23C

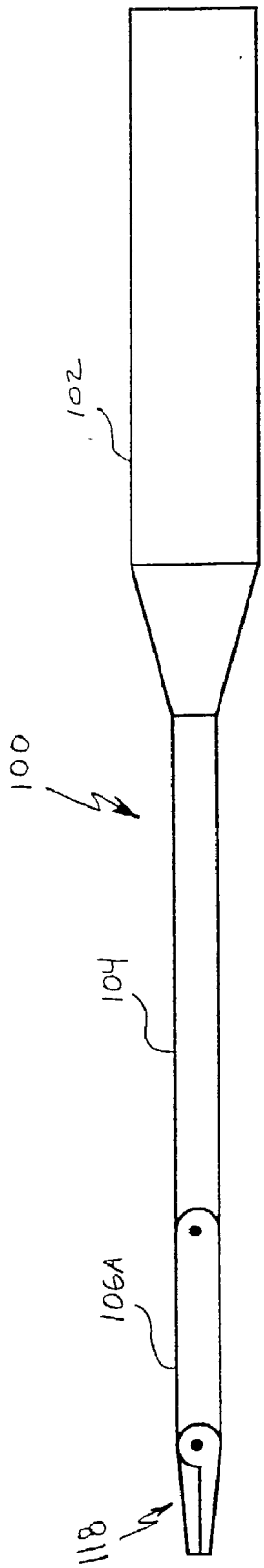

Fig. 23E

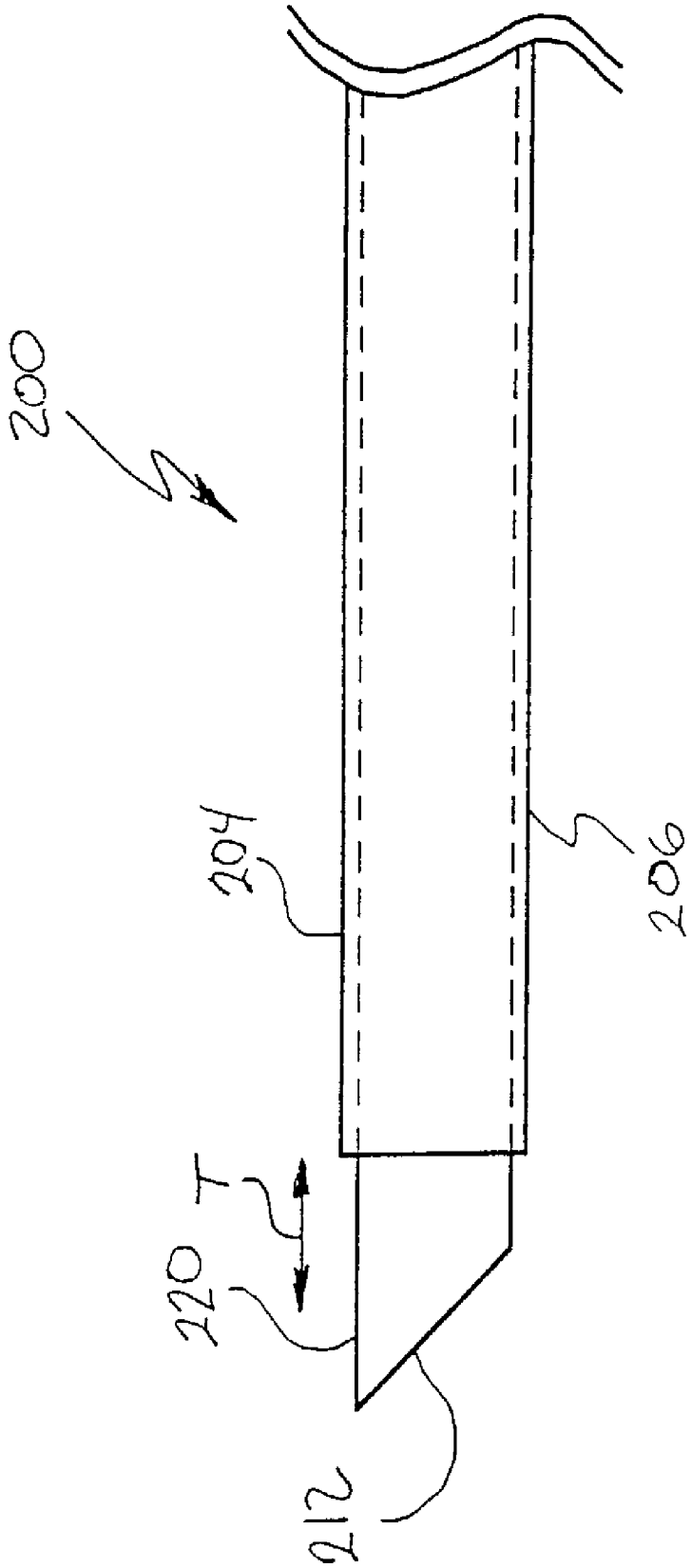

Fig. 24

MEDICAL INSTRUMENT POSITIONING TOOL AND METHOD

[0001] This application is a Continuation of U.S. patent application Ser. No.: 09/872,652, which is a Continuation-in-Part of U.S. patent application Ser. No.: 09/751,472, filed Dec. 29, 2000, each of which is incorporated herein by reference, in their entirety.

BACKGROUND OF THE INVENTION

[0002] 1. Field of Invention

[0003] The present invention relates, generally, to ablation instrument systems that use ablative energy to ablate internal bodily tissues. More particularly, to preformed guide apparatus which cooperate with energy delivery arrangements to direct the ablative energy in selected directions along the guide apparatus.

[0004] 2. Description of the Prior Art

[0005] It is well documented that atrial fibrillation, either alone or as a consequence of other cardiac disease, continues to persist as the most common cardiac arrhythmia.

[0006] According to recent estimates, more than two million people in the U.S. suffer from this common arrhythmia, roughly 0.15% to 1.0% of the population. Moreover, the prevalence of this cardiac disease increases with age, affecting nearly 8% to 17% of those over 60 years of age.

[0007] Atrial arrhythmia may be treated using several methods. Pharmacological treatment of atrial fibrillation, for example, is initially the preferred approach, first to maintain normal sinus rhythm, or secondly to decrease the ventricular response rate. Other forms of treatment include drug therapies, electrical cardioversion, and RF catheter ablation of selected areas determined by mapping. In the more recent past, other surgical procedures have been developed for atrial fibrillation, including left atrial isolation, transvenous catheter or cryosurgical ablation of His bundle, and the Corridor procedure, which have effectively eliminated irregular ventricular rhythm. However, these procedures have for the most part failed to restore normal cardiac hemodynamics, or alleviate the patient's vulnerability to thromboembolism because the atria are allowed to continue to fibrillate. Accordingly, a more effective surgical treatment was required to cure medically refractory atrial fibrillation of the Heart.

[0008] On the basis of electrophysiologic mapping of the atria and identification of macroreentrant circuits, a surgical approach was developed which effectively creates an electrical maze in the atrium (i.e., the MAZE procedure) and precludes the ability of the atria to fibrillate. Briefly, in the procedure commonly referred to as the MAZE III procedure, strategic atrial incisions are performed to prevent atrial reentry circuits and allow sinus impulses to activate the entire atrial myocardium, thereby preserving atrial transport function postoperatively. Since atrial fibrillation is characterized by the presence of multiple macroreentrant circuits that are fleeting in nature and can occur anywhere in the atria, it is prudent to interrupt all of the potential pathways for atrial macroreentrant circuits. These circuits, incidentally, have been identified by intraoperative mapping both experimentally and clinically in patients.

[0009] Generally, this procedure includes the excision of both atrial appendages, and the electrical isolation of the pulmonary veins. Further, strategically placed atrial incisions not only interrupt the conduction routes of the common reentrant circuits, but they also direct the sinus impulse from the sinoatrial node to the atrioventricular node along a specified route. In essence, the entire atrial myocardium, with the exception of the atrial appendages and the pulmonary veins, is electrically activated by providing for multiple blind alleys off the main conduction route between the sinoatrial node to the atrioventricular node. Atrial transport function is thus preserved postoperatively as generally set forth in the series of articles: Cox, Schuessler, Boineau, Canavan, Cain, Lindsay, Stone, Smith, Corr, Change, and D'Agostino, Jr., *The Surgical Treatment Atrial Fibrillation* (pts. 1-4), 101 THORAC CARDIOVASC SURG., 402-426, 569-592 (1991).

[0010] While this MAZE III procedure has proven effective in ablating medically refractory atrial fibrillation and associated detrimental sequelae, this operational procedure is traumatic to the patient since this is an open-heart procedure and substantial incisions are introduced into the interior chambers of the Heart. Consequently, other techniques have been developed to interrupt atrial fibrillation restore sinus rhythm. One such technique is strategic ablation of the atrial tissues through ablation catheters.

[0011] Most approved ablation catheter systems now utilize radio frequency (RF) energy as the ablating energy source. Accordingly, a variety of RF based catheters and power supplies are currently available to electrophysiologists. However, radio frequency energy has several limitations including the rapid dissipation of energy in surface tissues resulting in shallow "burns" and failure to access deeper arrhythmic tissues. Another limitation of RF ablation catheters is the risk of clot formation on the energy emitting electrodes. Such clots have an associated danger of causing potentially lethal strokes in the event that a clot is dislodged from the catheter. It is also very difficult to create continuous long lesions with RF ablation instruments.

[0012] As such, catheters which utilize other energy sources as the ablation energy source, for example in the microwave frequency range, are currently being developed. Microwave frequency energy, for example, has long been recognized as an effective energy source for heating biological tissues and has seen use in such hyperthermia applications as cancer treatment and preheating of blood prior to infusions. Accordingly, in view of the drawbacks of the traditional catheter ablation techniques, there has recently been a great deal of interest in using microwave energy as an ablation energy source. The advantage of microwave energy is that it is much easier to control and safer than direct current applications and it is capable of generating substantially larger and longer lesions than RF catheters, which greatly simplifies the actual ablation procedures. Such microwave ablation systems are described in the U.S. Pat. Nos. 4,641,649 to Walinsky; 5,246,438 to Langberg; 5,405,346 to Grundy, et al.; and 5,314,466 to Stern, et al, each of which is incorporated herein by reference.

[0013] Most of the existing microwave ablation catheters contemplate the use of longitudinally extending helical antenna coils that direct the electromagnetic energy in all

radial directions that are generally perpendicular to the longitudinal axis of the catheter. Although such catheter designs work well for a number of applications, such radial output is inappropriate when the energy needs to be directed toward the tissue to ablate only.

[0014] Consequently, microwave ablation instruments have recently been developed which incorporate microwave antennas having directional reflectors. Typically, a tapered directional reflector is positioned peripherally around the microwave antenna to direct the waves toward and out of a window portion of the antenna assembly. These ablation instruments, thus, are capable of effectively transmitting electromagnetic energy in a more specific direction. For example, the electromagnetic energy may be transmitted generally perpendicular to the longitudinal axis of the catheter but constrained to a selected radial region of the antenna, or directly out the distal end of the instrument. Typical of these designs are described in the U.S. patent application Ser. Nos.: 09/178,066, filed Oct. 23, 1998; and 09/333,747, filed Jun. 14, 1999, each of which is incorporated herein by reference.

[0015] In these designs, the resonance frequency of the microwave antenna is preferably tuned assuming contact between the targeted tissue or blood and a contact region of the antenna assembly extending longitudinally adjacent to the antenna longitudinal axis. Hence, should a portion of, or substantially all of, the exposed contact region of the antenna not be in contact with the targeted tissue or blood during ablation, the resonance frequency will be adversely changed and the antenna will be untuned. As a result, the portion of the antenna not in contact with the targeted tissue or blood will radiate the electromagnetic radiation into the surrounding air. The efficiency of the energy delivery into the tissue will consequently decrease which in turn causes the penetration depth of the lesion to decrease.

[0016] This is particularly problematic when the microwave antenna is not in the blood pool, or when the tissue surfaces are substantially curvilinear, or when the targeted tissue for ablation is difficult to access, such as in the interior chambers of the Heart. Since these antenna designs are generally relatively rigid, it is often difficult to maneuver substantially all of the exposed contact region of the antenna into abutting contact against the targeted tissue. In these instances, several ablation instruments, having antennas of varying length and shape, may be necessary to complete just one series of ablations.

SUMMARY OF THE INVENTION

[0017] Accordingly, a system for ablating a selected portion of a contact surface of biological tissue is provided. The system is particularly suitable to ablate cardiac tissue, and includes an elongated ablation sheath having a preformed shape adapted to substantially conform a predetermined surface thereof with the contact surface of the tissue. The ablation sheath defines an ablation lumen extending therethrough along an ablation path proximate to the predetermined surface. An elongated ablative device includes a flexible ablation element which cooperate with an ablative energy source which is sufficiently strong for tissue ablation. The ablative device is formed and dimensioned for longitudinal sliding receipt through the ablation lumen of the ablation sheath for selective placement of the ablative device along the ablation path created by the ablation sheath. The ablation lumen and the ablative device cooperate to position the ablative device proximate to the ablation sheath predetermined surface for selective ablation of the selected portion.

[0018] Accordingly, the ablation sheath in its preshaped form functions as a guide device to guide the ablative device along the ablation path when the predetermined surface of the ablation sheath properly contacts the biological tissue. Further, the cooperation between the ablative device and the ablation lumen, as the ablative device is advanced through the lumen, positions the ablative device in a proper orientation to facilitate ablation of the targeted tissue during the advancement. Thus, once the ablation sheath is stationed relative the targeted contact surface, the ablative device can be easily advanced along the ablation path to generate the desired tissue ablations.

[0019] In one embodiment, the ablative device is a microwave antenna assembly which includes a flexible shield device coupled to the antenna substantially shield a surrounding area of the antenna from the electromagnetic field radially generated therefrom while permitting a majority of the field to be directed generally in a predetermined direction toward the ablation sheath predetermined surface. The microwave antenna assembly further includes a flexible insulator disposed between the shield device and the antenna. A window portion of the insulator is defined which enables transmission of the directed electromagnetic field in the predetermined direction toward the ablation sheath predetermined surface. The antenna, the shield device and the insulator are formed for manipulative bending thereof, as a unit, to one of a plurality of contact positions to generally conform the window portion to the ablation sheath predetermined surface as the insulator and antenna are advanced through the ablation lumen.

[0020] In another embodiment, to facilitate alignment of the ablative device assembly in the ablation lumen, the ablative device provides a key device which is slidably received in a mating slot portion of the ablation lumen. In still another embodiment, the system includes a guide sheath defining a guide lumen formed and dimensioned for sliding receipt of the ablation sheath therethrough. The guide sheath is pre-shaped to facilitate positioning of the ablation sheath toward the selected portion of the contact surface when the ablation sheath is advanced through guide lumen.

[0021] The ablation sheath includes a bendable shape retaining member extending longitudinally therethrough which is adapted to retain the preformed shape of the ablation sheath once positioned out of the guide lumen of the guide sheath.

[0022] The ablative energy is preferably provided by a microwave ablative device. Other suitable tissue ablation devices, however, include cryogenic, ultrasonic, laser and radiofrequency, to name a few.

[0023] In another aspect of the present invention, a method for treatment of a Heart includes forming a penetration through a muscular wall of the Heart into an interior chamber thereof; and positioning a distal end of an elongated ablation sheath through the penetration. The ablation sheath defines an ablation lumen extending along an ablation path therethrough. The method further includes contacting,

or bringing close enough, a predetermined surface of the elongated ablation sheath with a first selected portion of an interior surface of the muscular wall; and passing a flexible ablative device through the ablation lumen of the ablation sheath for selective placement of the ablative device along the ablation path. Once these events have been performed, the method includes applying the ablative energy, using the ablative device and the ablation energy source, which is sufficiently strong to cause tissue ablation.

[0024] In one embodiment, the passing is performed by incrementally advancing the ablative device along a plurality of positions of the ablation path to produce a substantially continuous lesion. Before the positioning event, the method includes placing a distal end of a guide sheath through the penetration, and then positioning the distal end of the ablation sheath through the guide lumen of the guide sheath.

[0025] In still another embodiment, before the placing event, piercing the muscular wall with a piercing sheath. The piercing sheath defines a positioning passage extending therethrough. The placing the distal end of a guide sheath is performed by placing the guide sheath distal end through the positioning passage of the piercing sheath.

[0026] In yet another configuration, the positioning the distal end event includes advancing the ablation sheath toward the first selected portion of the interior surface of the muscular wall through a manipulation device extending through a second penetration into the Heart interior chamber independent from the first named penetration.

[0027] In another embodiment, a system for ablating tissue within a body of a patient is provided including an elongated rail device and an ablative device. The radial device is adapted to be positioned proximate and adjacent to a selected tissue region to be ablated within the body of the patient. The ablative device includes a receiving passage configured to slideably receive the rail device longitudinally therethrough. This enables the ablative device to be slideably positioned along the rail substantially adjacent to or in contact with the selected tissue region. The ablative device, having an energy delivery portion which is adapted to be coupled to an ablative energy source, can then be operated to ablate the selected tissue region.

[0028] In this configuration, the ablative device is adapted to directionally emit the ablative energy from the energy delivery portion. A key assembly cooperates between the ablative device and the rail member, thus, to properly align the directionally emitted ablative energy toward the tissue region to be ablated. This primarily performed by providing a rail device with a non-circular transverse cross-sectional sectional dimension. The receiving passage of the ablative device further includes a substantially similarly shaped non-circular transverse cross-section dimension to enable sliding of the ablative device in a manner continuously aligning the directionally emitted ablative energy toward the tissue region to be ablated as the ablative device advances along the rail device.

BRIEF DESCRIPTION OF THE DRAWINGS

[0029] The assembly of the present invention has other objects and features of advantage which will be more readily apparent from the following description of the best mode of carrying out the invention and the appended claims, when taken in conjunction with the accompanying drawing, in which:

[0030] **FIGS. 1A and 1B** are fragmentary, top perspective views, partially broken-away, of the ablation system constructed in accordance with the present invention, and illustrating advancement of a bendable directional reflective microwave antenna assembly through an ablation lumen of a ablation sheath.

[0031] FIGS. 2A-2D is series of fragmentary, side elevation views, in partial cross-section, of the Heart, and illustrating advancement of the ablation system of present invention into the left atrium for ablation of the targeted tissue.

[0032] **FIG. 3** is a fragmentary, side elevation view, in partial cross-section, of the Heart showing a pattern of ablation lesions to treat atrial fibrillation.

[0033] **FIGS. 4A and 4B** are a series of enlarged, fragmentary, top perspective view of a pigtail ablation sheath of the ablation system of **FIGS. 2C and 2D**, and exemplifying the ablation sheath being advanced into one of the pulmonary vein orifices.

[0034] **FIG. 5** is a front schematic view of a patient's cardiovascular system illustrating the positioning of a trans-septal piercing sheath through the septum wall of the patient's Heart.

[0035] **FIG. 6** is a fragmentary, side elevation view, in partial cross-section, of another embodiment of the ablation sheath of the present invention employed for lesion formation.

[0036] **FIG. 7** is a fragmentary, side elevation view, in partial cross-section, of yet another embodiment of the ablation sheath of the present invention employed for another lesion formation.

[0037] **FIG. 8** is an enlarged, front elevation view, in cross-section, of the ablation system of **FIG. 1** positioned through the trans-septal piercing sheath.

[0038] **FIG. 9** is an enlarged, front elevation view, in cross-section, of the ablation sheath and the antenna assembly of the ablation system in **FIG. 8** contacting the targeted tissue.

[0039] **FIG. 10** is an enlarged, front elevation view, in cross-section, of the antenna assembly taken substantially along the plane of the line **10-10** in **FIG. 9**.

[0040] **FIG. 11** is a diagrammatic top plan view of an alternative embodiment microwave ablation instrument system constructed in accordance with one embodiment of the present invention.

[0041] **FIG. 12** is an enlarged, fragmentary, top perspective view of the ablation instrument system of **FIG. 11** illustrated in a bent position to conform to a surface of the tissue to be ablated.

[0042] FIGS. 13A-13D is a series of side elevation views, in cross-section, of the ablation sheath of the present invention illustrating advancement of the ablation device incrementally through the ablation sheath to form plurality of overlapping lesions.

[0043] **FIG. 14A** is a fragmentary, side elevation view of a laser-type ablation device of the present invention.

[0044] **FIG. 14B** is a front elevation view of the laser-type energy delivery portion taken along the plane of the line 14B-14B in **FIG. 14A**.

[0045] **FIG. 15A** is a fragmentary, side elevation view of a cryogenic-type ablation device of the present invention.

[0046] **FIG. 15B** is a front elevation view of the cryogenic-type energy delivery portion taken along the plane of the line **15B-15B** in **FIG. 15A**.

[0047] **FIG. 16** is a fragmentary, side elevation view, in cross-section, of an ultrasonic-type ablation device of the present invention.

[0048] **FIG. 17** is an enlarged, fragmentary, top perspective view of an alternative embodiment ablation sheath having an opened window portion.

[0049] **FIG. 18** is a fragmentary, side elevation view of an alternative embodiment ablation assembly employing a rail system.

[0050] **FIG. 19** is a front elevation view of the energy delivery portion of the ablation rail system taken along the plane of the line **19-19** in **FIG. 18**.

[0051] FIGS. **20A-20C** are cross-sectional views of alternative key systems in accordance with the present invention.

[0052] **FIG. 21** is a fragmentary, diagrammatic, front elevation view of a torso applying one embodiment of the present invention through a minimally invasive technique.

[0053] **FIG. 22** is a top plan view, in cross-section of the fragmentary, diagrammatic, top plan view of the torso of **FIG. 21** applying the minimally invasive technique.

[0054] FIGS. **23A-B** are side elevation views of a positioning tool used in accordance with the present invention.

[0055] **FIG. 23C** is an end elevation view of a positioning tool used in accordance with the present invention.

[0056] **FIG. 23D** is an end elevation view of an alternative embodiment of a positioning tool used in accordance with the present invention.

[0057] **FIG. 23E** is a side elevation view of an alternative embodiment of a positioning tool used in accordance with the present invention.

[0058] **FIG. 24** is a side view of another alternative embodiment of a positioning tool used in accordance with the present invention.

DETAILED DESCRIPTION OF THE INVENTION

[0059] While the present invention will be described with reference to a few specific embodiments, the description is illustrative of the invention and is not to be construed as limiting the invention. Various modifications to the present invention can be made to the preferred embodiments by those skilled in the art without departing from the true spirit and scope of the invention as defined by the appended claims. It will be noted here that for a better understanding, like components are designated by like reference numerals throughout the various Figures.

[0060] Turning generally now to FIGS. **1A-2D**, an ablation system, generally designated **20**, is provided for transmurally ablating a targeted tissue **21** of biological tissue. The system **20** is particularly suitable to ablate the epicardial or endocardial tissue **40** of the heart, and more particularly, to treat medically refractory atrial fibrillation of the Heart. The ablation system **20** for ablating tissue within a body of a patient includes an elongated flexible tubular member **22** having at least one lumen **25** (**FIGS. 1A, 1B, 8** and **9**) and including a pre-shaped distal end portion (E.g., **FIGS. 2C, 6** and **7**) which is shaped to be positioned adjacent to or in contact with a selected tissue region **21** within the body of the patient. An ablative device, generally designated **26**, is configured to be slidably received longitudinally within the at least one lumen **25**, and includes an energy delivery portion **27** located near a distal end portion of the ablative device **26** which is adapted to be coupled to an ablative energy source (not shown).

[0061] The ablative device is preferably provided by a microwave ablation device **26** formed to emit microwave energy sufficient to cause tissue ablation. As will be described in greater detail below, however, the ablative device energy may be provided by a laser ablation device, a Radio Frequency (RF) ablation device, an ultrasound ablation device or a cryoablation device.

[0062] The tubular member **22** is in the form of an elongated ablation sheath having, in a preferred embodiment, a resiliently preformed shape adapted to substantially conform a predetermined contact surface **23** of the sheath with the targeted tissue region **21**. In another embodiment, the ablation sheath is malleable. Yet, in another embodiment, the ablation sheath is flexible. The lumen **25** of the tubular member extends therethrough along an ablation path proximate to the predetermined contact surface. Preferably, as will be described in more detail below, the ablative device **26** includes a flexible energy delivery portion **27** selectively generating an electromagnetic field which is sufficiently strong for tissue ablation. The energy delivery portion **27** is formed and dimensioned for longitudinal sliding receipt through the ablation lumen **25** of the ablation sheath **22** for selective placement of the energy delivery portion along the ablation path. The ablation lumen **25** and the ablative device **26** cooperate to position the energy delivery portion **27** proximate to the ablation sheath **22** predetermined contact surface **23** of the sheath for selective transmural ablation of the targeted tissue **21** within the electromagnetic field when the contact surface **23** strategically contacts or is positioned close enough to the targeted tissue **21**.

[0063] Accordingly, in one preferred embodiment, the pre-shaped ablation sheath **22** functions to unidirectionally guide or position the energy delivery portion **27** of the ablative device **26** properly along the predetermined ablation path **28** proximate to the targeted tissue region **21** as the energy delivery portion **27** is advanced through the ablation lumen **25**. By positioning the energy delivery portion **27**, which is preferably adapted to emit a directional ablation field, at one of a plurality of positions incrementally along the ablation path (**FIGS. 1A and 1B**) in the lumen **25**, a single continuous or plurality of spaced-apart lesions can be formed. In other instances, the antenna length may be sufficient to extend along the entire ablation path **28** so that only a single ablation sequence is necessary.

[0064] While the method and apparatus of the present invention are applicable to ablate any biological tissue which requires the formation of controlled lesions (as will be described in greater detail below), this ablation system is particularly suitable for ablating endocardial or epicardial tissue of the Heart. For example, the present invention may

be applied in an intra-coronary configuration where the ablation procedure is performed on the endocardium of any cardiac chamber. Specifically, such ablations may be performed on the isthmus to address atrial flutter, or around the pulmonary vein ostium, electrically isolating the pulmonary veins, to treat medically refractory atrial fibrillation (**FIG. 3**). This procedure requires the precise formation of strategically placed endocardial lesions **30-36** which collectively isolate the targeted regions. By way of example, any of the pulmonary veins may be collectively isolated to treat chronic atrial fibrillation. The annular lesion isolating one or more than one pulmonary vein can be linked with another linear lesion joining the mitral valve annulus. In another example, the annular lesion isolating one or more than one pulmonary vein can be linked with another linear lesion joining the left atrium appendage.

[**0065**] In a preferred embodiment, the pre-shaped ablation sheath **22** and the sliding ablative device **26** may applied to ablate the epicardial tissue **39** of the Heart **40** as well (**FIG. 12**). An annular ablation, for instance, may be formed around the pulmonary vein for electrical isolation from the left atrium. As another example, the lesions may be created along the transverse sinus and oblique sinus as part of the collective ablation pattern to treat atrial fibrillation for example.

[**0066**] The application of the present invention, moreover, is preferably performed through minimally invasive techniques. It will be appreciated, however, that the present invention may be applied through open chest techniques as well.

[**0067**] Briefly, to illustrate the operation of the present invention, a flexible pre-shaped tubular member (i.e., ablation sheath **22**) in the form of a pigtail is shown in **FIGS. 2C and 2*d*** which is specifically configured to electrically isolate a pulmonary vein of the Heart **40**. The isolating lesions are preferably made on the posterior wall of the left atrium, around the ostium of one, or more than one of a pulmonary vein.

[**0068**] In this example and as illustrated in **FIGS. 4A and 4B**, a distal end of the pigtail-shaped ablation sheath or tubular member **22** is positioned into the left superior pulmonary vein orifice **37** from the left atrium **41**. As the ablation sheath **22** is further advanced, a predetermined contact surface **23** of the ablation sheath is urged adjacent to or into contact with the endocardial surface of the targeted tissue region **21** (**FIGS. 2D and 4B**). Once the ablation sheath **22** is properly positioned and oriented, the ablative device **26** is advanced through the ablation lumen **25** of the ablation sheath **22** (**FIGS. 1A and 1B**) which moves the energy delivery portion **27** of the ablative device along the ablation path. When the energy delivery portion **27** is properly oriented and positioned in the ablation lumen **25**, the directional ablation field may be generated to incrementally ablate (FIGS. **13**A-**13**D) the epicardial surface of the targeted tissue **21** along the ablation path to isolate the Left Superior Pulmonary Vein (LIPV)

[**0069**] Accordingly, as shown in FIGS. **13**A-**13**D, as the energy delivery portion **27** is incrementally advanced through the lumen **25**, overlapping lesion sections **44-44'''** are formed by the ablation field which is directional in one preferred embodiment. Collectively, a continuous lesion or series of lesions can be formed which essentially three-dimensionally "mirror" the shape of the contact surface **23** of the ablation sheath **22** which is positioned adjacent to or in contact with the targeted tissue region. These transmural lesions may thus be formed in any shape on the targeted tissue region such as rectilinear, curvilinear or circular in shape. Further, depending upon the desired ablation lines pattern, both opened and closed path formation can be constructed.

[**0070**] Referring now to **FIGS. 2A, 2D** and **5**, a minimal invasive application of the present invention is illustrated for use in ablating Heart tissue. By way of example, a conventional trans-septal piercing sheath **42** is introduced into the femoral vein **43** through a venous cannula **45** (**FIG. 5**). The piercing sheath is then intravenously advanced into the right atrium **46** of the Heart **40** through the inferior vena cava orifice **47**. These piercing sheaths are generally resiliently pre-shaped to direct a conventional piercing device **48** toward the septum wall **50**. The piercing device **48** and the piercing sheath **42** are manipulatively oriented and further advanced to pierce through the septum wall **50**, as a unit, of access into the left atrium **41** of the Heart **40** (**FIG. 2A**).

[**0071**] These conventional devices are commonly employed in the industry for accessing the left atrium or ventricle, and have an outer diameter in the range of about 0.16 inch to about 0.175 inch, while having an inner diameter in the range of about 0.09 inch to about 0.135 inch.

[**0072**] Once the piercing device **48** is withdrawn from a positioning passage **51** (**FIG. 8**) of the piercing sheath **42**, a guide sheath **52** of the ablation system **20** is slidably advanced through the positioning passage and into a cardiac chamber such as the left atrium **41** thereof (**FIG. 2B**). The guide sheath **52** is essentially a pre-shaped, open-ended tubular member which is inserted into the coronary circulation to direct and guide the advancing ablation sheath **22** into a selected cardiac chamber (i.e., the left atrium, right atrium, left ventricle or right ventricle) and toward the general direction of the targeted tissue. Thus, the guide sheath **52** and the ablation sheath **22** telescopically cooperate to position the predetermined contact surface **23** thereof substantially adjacent to or in contact with the targeted tissue region.

[**0073**] Moreover, the guide sheath and the ablation sheath cooperate to increase the structural stability of the system as the ablation sheath is rotated and manipulated from its proximal end into ablative contact with the targeted tissue **21** (FIG. **2**A). As the distal curved portions of the ablation sheath **22**, which is inherently longer than the guide sheath, is advanced past the distal lumen opening of the guide sheath, these resilient curved portions will retain their original unrestrained shape.

[**0074**] The telescopic effect of these two sheaths is used to position the contact surface **23** of the ablation sheath **22** substantially adjacent to or in contact with the targeted tissue. Thus, depending upon the desired lesion formation, the same guide sheath **52** may be employed for several different procedures. For example, the lesion **30** encircling the left superior pulmonary vein ostium and the Left Inferior Pulmonary Vein Ostium (RIPVO) lesion **31** (**FIG. 3**) may be formed through the cooperation of the pigtail ablation sheath **22** and the same guide sheath **52** of **FIG. 2B and 2D**, while the same guide sheath may also be utilized with a different ablation sheath **22** (**FIG. 4**) to create the long linear lesion **34** as shown in **FIG. 3**.

[0075] In contrast, as illustrated in **FIG. 7**, another guide sheath **52** having a different pre-shaped distal end section may be applied to direct the advancing ablation sheath **22** back toward the in the left and right superior pulmonary vein orifices **53**, **55**. Thus, several pre-shaped guide sheaths, and the corresponding ablation sheaths, as will be described, cooperate to create a predetermined pattern of lesions (E.g., a MAZE procedure) on the tissue.

[0076] In the preferred embodiment, the guide sheath **52** is composed of a flexible material which resiliently retains its designated shape once external forces urged upon the sheath are removed. These external forces, for instance, are the restraining forces caused by the interior walls **56** of the trans-septal piercing sheath **42** as the guide sheath **52** is advanced or retracted therethrough. While the guide sheath **52** is flexible, it must be sufficiently rigid so as to substantially retain its original unrestrained shape, and not to be adversely influenced by the ablation sheath **22**, as the ablation sheath is advanced through the lumen of the guide sheath. Such flexible, biocompatible materials may be composed of braided Pebax or the like having an outer diameter formed and dimensioned for sliding receipt longitudinally through the positioning passage **51** of the trans-septal piercing sheath **42**. The outer dimension is therefore preferably cylindrical having an outer diameter in the range of about 0.09 inch to about 0.145 inch, and more preferably about 0.135", while having an inner diameter in the range of about 0.05 inch to about 0.125 inch, and more preferably about 0.115". This cylindrical dimension enables longitudinal sliding receipt, as well as axial rotation, in the positioning passage **51** to properly place and advance the guide sheath **52**. Thus, the dimensional tolerance between the cylindrical-shaped, outer peripheral wall of the guide sheath **52** and the interior walls **56** of the trans-septal piercing sheath **42** should be sufficiently large to enable reciprocal movement and relative axial rotation therebetween, while being sufficiently small to substantially prevent lateral displacement therebetween as the ablation sheath **22** is urged into contact with the targeted tissue **21**. For example, the dimensional tolerance between the transverse cross-sectional periphery of the interior walls **56** of the positioning passage **51** and that of the substantially conforming guide sheath **52** should be in the range of about 0.005 inches to about 0.020 inches.

[0077] To increase the structural integrity of the guide sheath **52**, metallic braids **57** are preferably incorporated throughout the sheath when the guide sheath is molded to its preformed shape. These braids **57** are preferably provided by 0.002" wires composed of 304 stainless steel evenly spaced about the sheath.

[0078] Once the guide sheath **52** is properly positioned and oriented relative the trans-septal sheath **42**, the ablation sheath **22** is advanced through a guide lumen **54** (**FIG. 8**) of the guide sheath **52** toward the targeted tissue. Similar to the pre-shaped guide sheath **52**, the ablation sheath **22** is pre-shaped in the form of the desired lesions to be formed in the endocardial surface of the targeted tissue **21**. As best viewed in **FIGS. 2D, 6** and **7**, each ablation sheath **52** is adapted facilitate an ablation in the targeted tissue **21** generally in the shape thereof. Thus, several pre-shaped ablation sheaths cooperate to form a type of steering system to position the ablation device about the targeted tissue. Collectively, a predetermined pattern of linear and curvilinear lesions (E.g., a MAZE procedure) can be ablated on the targeted tissue region.

[0079] Again, similar to the guide sheath **52**, the ablation sheath **22** is composed of a flexible material which resiliently retains its designated shape once external forces urged upon the sheath are removed. These external forces, for instance, are the restraining forces caused by the interior walls **59** defining the guide lumen **54** of the guide sheath **52** as the ablation sheath **22** is advanced or retracted therethrough. Such flexible, biocompatible materials may be composed of Pebax or the like having an outer diameter formed and dimensioned for sliding receipt longitudinally through the guide lumen **54** of the ablation sheath **22**. As mentioned, the inner diameter of the guide lumen **54** is preferably in the range of about 0.050 inch to about 0.125 inch, and more preferably about 0.115", while the ablation sheath **26** has an outer diameter in the range of about 0.40 inch to about 0.115 inch, and more preferably about 0.105".

[0080] The concentric cylindrical dimensions enable longitudinal sliding receipt, as well as axial rotation, of the ablation sheath **22** in the guide lumen **54** to properly place and advance the it toward the targeted tissue **21**. Thus, the dimensional tolerance between the cylindrical-shaped, outer peripheral wall of the ablation sheath **22** and the interior walls **59** of the guide lumen **54** of the guide sheath **52** should be sufficiently large to enable reciprocal movement and relative axial rotation therebetween, while being sufficiently small to substantially prevent lateral displacement therebetween as the ablation sheath **22** is urged into contact with the targeted tissue **21**. For example, the dimensional tolerance between the transverse cross-sectional periphery of the guide lumen **54** and that of the substantially conforming energy delivery portion **27** should be in the range of about 0.001 inches to about 0.005 inches.

[0081] As above-indicated, the pre-shaped ablation sheath **22** facilitates guidance of the ablative device **26** along the predetermined ablation path **28**. This is primarily performed by advancing the energy delivery portion **27** of the ablative device **26** through the ablation lumen **25** of the ablation sheath **22** which is preferably off-set from the longitudinal axis **78** thereof. As best viewed in **FIGS. 8 and 9**, this off-set positions the energy delivery portion **27** relatively closer to the predetermined contact surface **23** of the ablation sheath **22**, and hence the targeted tissue **21**. Moreover, when using directional fields such as those emitted from their energy delivery portion **27**, it is important to provide a mechanism for continuously aligning the directional field of the energy delivery portion **27** with the tissue **21** targeted for ablation. Thus, in this design, the directional field must be continuously aligned with the predetermined contact surface **23** of the ablation sheath **22** as the energy delivery portion **27** is advanced through the ablation lumen **25** since the ablation sheath contact surface **23** is designated to contact or be close enough to the targeted tissue.

[0082] If the directional field is not aligned correctly, for example, the energy may be transmitted into surrounding fluids and tissues designated for preservation rather than into the targeted tissue region. Therefore, in accordance with another aspect of the present invention, a key structure **48** (**FIGS. 1, 8** and **9**) cooperates between the ablative device **26** and the ablation lumen **25** to orient the directive energy

delivery portion **27** of the ablative device continuously toward the targeted tissue region **21** as it is advanced through the lumen. This key structure **48**, thus, only allows receipt of the energy delivery portion **27** in the lumen in one orientation. More particularly, the key structure **48** continuously aligns a window portion **58** of the energy delivery portion **27** substantially adjacent the predetermined contact surface **23** of the ablation sheath **22** during advancement. This window portion **58**, as will be described below, enables the transmission of the directed ablative energy from the energy delivery portion **27**, through the contact surface **23** of the ablation sheath **22** and into the targeted tissue region. Consequently, the directional ablative energy emitted from the energy delivery portion will always be aligned with the contact surface **23** of the ablation sheath **22**, which is positioned adjacent to or in contact with the targeted tissue region **21**, to maximize ablation efficiency. By comparison, the ablation sheath **22** is capable of relatively free rotational movement axially in the guide lumen **54** of the guide sheath **52** for maneuverability and positioning of the ablation sheath therein.

[**0083**] As mentioned, the transverse cross-sectional dimension of the energy delivery portion **27** is configured for sliding receipt in the ablation lumen **25** of the ablation sheath **22** in a manner positioning the directional ablative energy, emitted by the energy delivery portion, continuously toward the predetermined contact surface **23** of the ablation sheath **22**. In one example, as shown in **FIGS. 8 and 9**, the transverse peripheral dimensions of the energy delivery portion **27** and the ablation lumen **25** are generally D-shaped, and substantially similar in dimension. Thus, the window portion **58** of the insulator **61**, as will be discussed, is preferably semi-cylindrical and concentric with the interior wall **62** defining the ablation lumen **25** of the ablation sheath **22**. It will be appreciated, however, that any geometric configuration may be applied to ensure unitary or aligned insertion. As another example, one of the energy delivery portion and the interior wall of the ablation lumen may include a key member and corresponding receiving groove, or the like. Such key and receiving groove designs, nonetheless, should avoid relatively sharp edges to enable smooth advancement and retraction of the energy delivery portion in the ablation lumen **25**.

[**0084**] This dimension alignment relationship can be maintain along the length of the predetermined contact surface of the ablation sheath **22** as the energy delivery portion **27** is advanced through the ablation lumen whether in the configuration of **FIGS. 2, 6, 7** or **12**. In this manner, a physician may determine that once the predetermined contact surface **23** of the ablation sheath **22** is properly oriented and positioned adjacent or in contact against the targeted tissue **21**, the directional component (as will be discussed) of the energy delivery portion **27** will then be automatically aligned with the targeted tissue as it is advanced through the ablation lumen **25**. Upon selected ablation by the ablative energy, a series of overlapping lesions **44-44'''** (FIGS. **13A-13D**) or a single continuous lesion can then be generated.

[**0085**] It will further be appreciated that the dimensional tolerances therebetween should be sufficiently large to enable smooth relative advancement and retraction of the energy delivery portion **27** around curvilinear geometries, and further enable the passage of gas therebetween. Since the ablation lumen **25** of the ablation sheath **22** is closed ended, gases must be permitted to flow between the energy delivery portion **27** and the interior wall **62** defining the ablation lumen **25** to avoid the compression of gas during advancement of the energy delivery portion therethrough. Moreover, the tolerance must be sufficiently small to substantially prevent axial rotation of the energy delivery portion in the ablation lumen **25** for alignment purposes. The dimensional tolerance between the transverse cross-sectional periphery of the ablation lumen and that of the substantially conforming energy delivery portion **27**, for instance, should be in the range of about 0.001 inches to about 0.005 inches.

[**0086**] To further facilitate preservation of the fluids and tissues along the backside of the ablation sheath **22** (i.e., the side opposite the contact surface **23** of the sheath), a thermal isolation component (not shown) is disposed longitudinally along, and substantially adjacent to, the ablation lumen **25**. Thus, during activation of the ablative device, the isolation component and the directive component **73** of the energy ablation portion **27** cooperate to form a thermal barrier along the backside of the ablation sheath.

[**0087**] For instance, the isolation component may be provided by an air filled isolation lumen extending longitudinally along, and substantially adjacent to, the ablation lumen **25**. The cross-sectional dimension of the isolation lumen may be C-shaped or crescent shaped to partially surround the ablation lumen **25**. In another embodiment, the isolation lumen may be filled with a thermally refractory material.

[**0088**] In still another embodiment, a circulating fluid, which is preferably biocompatible, may be disposed in the isolation lumen to provide to increase the thermal isolation. Two or more lumens may be provided to increase fluid flow. One such biocompatible fluid providing suitable thermal properties is saline solution.

[**0089**] Similar to the composition of the guide sheath **52**, the ablation sheath **22** is composed of a flexible bio-compatible material, such as PU Pellethane, Teflon or polyethylent, which is capable of shape retention once external forces acting on the sheath are removed. By way of example, when the distal portions of the ablation sheath **22** are advanced past the interior walls of the guide lumen **54** of the guide sheath **52**, the ablation sheath **22** will return to its preformed shape in the interior of the Heart.

[**0090**] To facilitate shape retention, the ablation sheath **22** preferably includes a shape retaining member **63** extending longitudinally through the distal portions of the ablation sheath where shape retention is necessary. As illustrated in **FIGS. 1, 8** and **9**, this retaining member **63** is generally extends substantially parallel and adjacent to the ablation lumen **25** to reshape the predetermined contact surface **23** to its desired pre-shaped form once the restraining forces are removed from the sheath. While this shape-memory material must be sufficiently resilient for shape retention, it must also be sufficiently bendable to enable insertion through the guide lumen **54** of the guide sheath **52**. In the preferred form, the shape retaining member is composed of a superelastic metal, such as Nitinol (NiTi). Moreover, the preferred diameter of this material should be in the range of 0.020 inches to about 0.050 inches, and more preferably about 0.035 inches.

[**0091**] When used during a surgical procedure, the ablation sheath **22** is preferably transparent which enables a

surgeon to visualize the position of the energy delivery portion **27** of the ablative device **26** through an endoscope or the like. Moreover, the material of ablation sheath **22** must be substantially unaffected by the ablative energy emitted by the energy delivery portion **27**. Thus, as will be apparent, depending upon the type of energy delivery portion and the ablative source applied, the material of the tubular sheath must exhibit selected properties, such as a low loss tangent, low water absorption or low scattering coefficient to name a few, to be unaffected by the ablative energy.

[**0092**] As previously indicated, the ablation sheath **22** is advanced and oriented, relative to the guide sheath **52**, adjacent to or into contact with the targeted tissue region **21** to form a series of over-lapping lesions **44-44'''**, such as those illustrated in **FIGS. 3 and 13**A-13D. Preferably, the contact surface **23** of the pre-shaped ablation sheath **22** is negotiated into physical contact with the targeted tissue **21**. Such contact increases the precision of the tissue ablation while further facilitating energy transfer between the ablation element and the tissue to be ablated, as will be discussed.

[**0093**] To assess proper contact and positioning of the contact surface **23** of the ablation sheath **22** against the targeted tissue **21**, at least one positioning electrode, generally designated **64**, is disposed on the exterior surface of the ablation sheath for contact with the tissue. Preferably a plurality of electrodes are positioned along and adjacent the contact surface **23** to assess contact of the elongated and three dimensionally shaped contact surface. These electrodes **64** essentially measure whether there is any electrical activity (or electrophysiological signals) to one or the other side of the ablation sheath **22**. When a strong electrical activation signal is detected, or inter-electrode impedance is measured when two or more electrodes are applied, contact with the tissue can be assessed. Once the physician has properly situated and oriented the sheath, they may commence advancement of the energy delivery portion **27** through the ablation lumen **25**. Additionally, these positioning electrodes may be applied to map the biological tissue prior to or after an ablation procedure, as well as be used to monitor the patient's condition during the ablation process.

[**0094**] To facilitate discussion of the above aspects of the present invention, **FIG. 10** illustrates two side-by-side electrodes **64, 65** configured for sensing electrical activity in substantially one direction, in accordance with one aspect of the present invention. This electrode arrangement generally includes a pair of longitudinally extending electrode elements **66, 67** that are disposed on the outer periphery of the ablation sheath **22**. The pair of electrode elements **66, 67** are positioned side by side and arranged to be substantially parallel to one another. In general, splitting the electrode arrangement into a pair of distinct elements permits substantial improvements in the resolution of the detected electrophysiological signals.

[**0095**] Therefore, the pair of electrode elements **66, 67** are preferably spaced apart and electrically isolated from one another. It will be appreciated, however, that only one electrode may be employed to sense proper tissue contact. It will also be appreciated that ring or coiled electrodes can also be used.

[**0096**] The pair of electrode elements **66, 67** are further arranged to be substantially parallel to the longitudinal axis of the ablation sheath **22**. In order to ensure that the electrode elements are sensing electrical activity in substantially the same direction, the space between electrodes should be sufficiently small. It is generally believed that too large space may create problems in determining the directional position of the catheter and too small a space may degrade the resolution of the detected electrophysiological signals. By way of example, the distance between the two pair of electrode elements may be between about 0.5 and 2.0 mm.

[**0097**] The electrode elements **66, 67** are preferably positioned substantially proximate to the predetermined contact surface **23** of the ablation sheath **22**. More preferably, the electrode elements **66, 67** are positioned just distal to the distal end of the predetermined contact surface **23** since it is believed to be particularly useful to facilitate mapping and monitoring as well as to position the ablation sheath **22** in the area designated for tissue ablation. For example, during some procedures, a surgeon may need to ascertain where the distal end of the ablation sheath **22** is located in order to ablate the appropriate tissues. In another embodiment, the electrode elements **66, 67** may be positioned substantially proximate the proximal end of the predetermined contact surface **23**, at a central portion of the contact surface **23** or a combination thereof. For instance, when attempting to contact the loop-shaped ablation sheath **22** employed to isolate each of left and inferior pulmonary vein orifices **37, 38**, a central location of the electrodes along the looped-shape contact surface **23** may best sense contact with the targeted tissue. Moreover, while not specifically illustrated, a plurality of electrode arrangements may be disposed along the ablation sheath as well. By way of example, a first set of electrode elements may be disposed distally from the predetermined contact surface, a second set of electrode elements may be disposed proximally to the contact surface, while a third set of electrode elements may be disposed centrally thereof. These electrodes may also be used with other types of mapping electrodes, for example, a variety of suitable mapping electrode arrangements are described in detail in U.S. Pat. No. 5,788,692 to Campbell, et al., which is incorporated herein by reference in its entirety. Although only a few positions have been described, it should be understood that the electrode elements may be positioned in any suitable position along the length of the ablation sheath.

[**0098**] The electrode elements **66, 67** may be formed from any suitable material, such as stainless steel and iridium platinum. The width (or diameter) and the length of the electrode may vary to some extent based on the particular application of the catheter and the type of material chosen. Furthermore, in the preferred embodiment where microwave is used as the ablative energy, the electrodes are preferably dimensioned to minimize electromagnetic field interference, for example, the capturing of the microwave field produced by the antenna. In most embodiments, the electrodes are arranged to have a length that is substantially larger than the width, and are preferably between about 0.010 inches to about 0.025 inches and a length between about 0.50 inch to about 1.0 inch.

[**0099**] Although the electrode arrangement has been shown and described as being parallel plates that are substantially parallel to the longitudinal axis of the ablation sheath **22** and aligned longitudinally (e.g., distal and proximal ends match up), it should be noted that this is not a limitation and that the electrodes can be configured to be

angled relative to the longitudinal axis of the ablation sheath **22** (or one another) or offset longitudinally. Furthermore, although the electrodes have been shown and described as a plate, it should be noted that the electrodes may be configured to be a wire or a point such as a solder blob.

[**0100**] Each of the electrode elements **66**, **67** is electrically coupled to an associated electrode wire **68**, **70** and which extend through ablation sheath **22** to at least the proximal portion of the flexible outer tubing. In most embodiments, the electrode wires **68**, **70** are electrically isolated from one another to prevent degradation of the electrical signal, and are positioned on opposite sides of the retaining member **63**. The connection between the electrodes **64**, **65** and the electrode wires **68**, **70** may be made in any suitable manner such as soldering, brazing, ultrasonic welding or adhesive bonding. In other embodiments, the longitudinal electrodes can be formed from the electrode wire itself. Forming the longitudinal electrodes from the electrode wire, or out of wire in general, is particularly advantageous because the size of wire is generally small and therefore the longitudinal electrodes elements may be positioned closer together thereby forming a smaller arrangement that takes up less space. As a result, the electrodes may be positioned almost anywhere on a catheter or surgical tool. These associated electrodes are described in greater detail in U.S. patent application Ser. No.: 09/548,331, filed Apr. 12, 2000, and entitled "ELECTRODE ARRANGE-MENT FOR USE IN A MEDICAL INSTRUMENT", and incorporated by reference.

[**0101**] Referring now to **FIGS. 1, 8, 9** and **11**, the ablative device **26** is preferably in the form of an elongated member, which is designed for insertion into the ablation lumen **25** of the ablation sheath **22**, and which in turn is designed for insertion into a vessel (such as a blood vessel) in the body of a patient. It will be understood, however, that the present invention may be in the form of a handheld instrument for use in open surgical or minimally invasive procedures (**FIG. 12**).

[**0102**] The ablative device **26** typically includes a flexible outer tubing **71** (having one or several lumens therein), a transmission line **72** that extends through the flexible tubing **71** and an energy delivery portion **27** coupled to the distal end of the transmission line **72**. The flexible outer tubing **71** may be made of any suitable material such as medical grade polyolefins, fluoropolymers, or polyvinylidene fluoride. By way of example, PEBAX resins from Autochem of Germany have been used with success for the outer tubing of the body of the catheter.

[**0103**] In accordance with another aspect of the present invention, the ablative energy emitted by the energy delivery portion **27** of the ablative device **26** may be one of several types. Preferably, the energy delivery portion **27** includes a microwave component which generates a electromagnetic field sufficient to cause tissue ablation. As mentioned, as will be discussed in greater detail below, the ablative energy may also be derived from a laser source, a cryogenic source, an ultrasonic source or a radiofrequency source, to name a few.

[**0104**] Regardless of the source of the energy, a directive component cooperates with the energy source to control the direction and emission of the ablative energy. This assures that the surrounding tissues of the targeted tissue regions will be preserved. Further, the use of a directional field has several potential advantages over conventional energy delivery structure that generate uniform fields about the longitudinal axis of the energy delivery portion. For example, in the microwave application, by forming a more concentrated and directional electromagnetic field, deeper penetration of biological tissues is enabled, and the targeted tissue region may be ablated without heating as much of the surrounding tissues and/or blood. Additionally, since substantial portions the radiated ablative energy is not emitted in the air or absorbed in the blood or the surrounding tissues, less power is generally required from the power source, and less power is generally lost in the microwave transmission line.

[**0105**] In the preferred form, the energy delivery portion **27** of the ablative device **26** is an antenna assembly configured to directionally emit a majority of an electromagnetic field from one side thereof. The antenna assembly **27**, as shown in **FIGS. 9 and 11**, preferably includes a flexible antenna **60**, for generating the electromagnetic field, and a flexible reflector **73** as a directive component, for redirecting a portion of the electromagnetic field to one side of the antenna opposite the reflector.

[**0106**] Correspondingly, the resultant electromagnetic field includes components of the originally generated field, and components of the redirected electromagnetic field.

[**0107**] During aligned insertion of the antenna assembly **27** into the ablation lumen **25**, via the key structure **48**, the directional field will thus be continuously aligned toward the contact surface **23** of the ablation sheath **22** as the antenna assembly is incrementally advanced through the ablation lumen **25**.

[**0108**] **FIG. 11** illustrates that the proximal end of the antenna **60** is preferably coupled directly or indirectly to the inner conductor **75** of a coaxial transmission line **72**. A direct connection between the antenna **60** and the inner conductor **75** may be made in any suitable manner such as soldering, brazing, ultrasonic welding or adhesive bonding. In other embodiments, antenna **60** can be formed from the inner conductor **75** of the transmission line **72** itself. This is typically more difficult from a manufacturing standpoint but has the advantage of forming a more rugged connection between the antenna and the inner conductor. As will be described in more detail below, in some implementations, it may be desirable to indirectly couple the antenna to the inner conductor through a passive component, such a capacitor, an inductor or a stub tuner for example, in order to provide better impedance matching between the antenna assembly and the transmission line, which is a coaxial cable in the preferred embodiment.

[**0109**] Briefly, the transmission line **72** is arranged for actuating and/or powering the antenna **60**. Typically, in microwave devices, a coaxial transmission line is used, and therefore, the transmission line **72** includes an inner conductor **75**, an outer conductor **76**, and a dielectric material **77** disposed between the inner and outer conductors. In most instances, the inner conductor **75** is coupled to the antenna **60**. Further, the antenna **60** and the reflector **73** are enclosed (e.g., encapsulated) in a flexible insulative material thereby forming the insulator **61**, to be described in greater detail below, of the antenna assembly **27**.

[**0110**] The power supply (not shown) includes a microwave generator which may take any conventional form.

When using microwave energy for tissue ablation, the optimal frequencies are generally in the neighborhood of the optimal frequency for heating water. By way of example, frequencies in the range of approximately 800 MHz to 6 GHz work well. Currently, the frequencies that are approved by the Federal Communication Commission (FCC) for experimental clinical work includes 915 MHz and 2.45 GHz. Therefore, a power supply having the capacity to generate microwave energy at frequencies in the neighborhood of 2.45 GHz may be chosen. A conventional magnetron of the type commonly used in microwave ovens is utilized as the generator. It should be appreciated, however, that any other suitable microwave power source could be substituted in its place, and that the explained concepts may be applied at other frequencies like about 434 MHz or 5.8 GHz (ISM band).

[0111] In the preferred embodiment, the antenna assembly **27** includes a longitudinally extending antenna wire **60** that is laterally offset from the transmission line inner conductor **75** to position the antenna closer to the window portion **58** of the insulator **61** upon which the directed electric field is transmitted. The antenna **60** illustrated is preferably a longitudinally extending exposed wire that extends distally (albeit laterally offset) from the inner conductor. However it should be appreciated that a wide variety of other antenna geometries may be used as well. By way of example, helical coils, flat printed circuit antennas and other antenna geometries will work as well.

[0112] Briefly, the insulator **61** is preferably provided by a good, low-loss dielectric material which is relatively unaffected by microwave exposure, and thus capable of transmission of the electromagnetic field therethrough. Moreover, the insulator material preferably has a low water absorption so that it is not itself heated by the microwaves. Incidentally, when the emitted ablative energy is microwave in origin, the ablation sheath must also include these material properties. Finally, the insulation material must be capable of substantial flexibility without fracturing or breaking. Such materials include moldable TEFLON®, silicone, or polyethylene, polyimide, etc.

[0113] As will be appreciated by those familiar with antenna design, the field generated by the illustrated antenna will be generally consistent with the length of the antenna. That is, the length of the electromagnetic field is generally constrained to the longitudinal length of the antenna. Therefore, the length of the field may be adjusted by adjusting the length of the antenna. Accordingly, microwave ablation elements having specified ablation characteristics can be fabricated by building them with different length antennas. Additionally, it should be understood that longitudinally extending antennas are not a requirement and that other shapes and configurations may be used.

[0114] The antenna **60** is preferably formed from a conductive material. By way of example, copper or silver-plated metal work well. Further, the diameter of the antenna **60** may vary to some extent based on the particular application of the catheter and the type of material chosen. In microwave systems using a simple exposed wire type antenna, for instance, wire diameters between about 0.010 to about 0.020 inches work well. In the illustrated embodiment, the diameter of the antenna is about 0.013 inches.

[0115] In a preferred embodiment, the antenna **60** is positioned closer to the area designated for tissue ablation in order to achieve effective energy transmission between the antenna **60** and the targeted tissue **21** through the predetermined contact surface **23** of the ablation sheath **22**. This is best achieved by placing the antenna **60** proximate to the outer peripheral surface of the antenna insulator **61**. More specifically, a longitudinal axis of the antenna **60** is preferably off-set from, but parallel to, a longitudinal axis **78** of the inner conductor **75** in a direction away from the reflector **73** and therefore towards the concentrated electromagnetic field (**FIGS. 8 and 9**). By way of example, placing the antenna between about 0.010 to about 0.020 inches away from the outer peripheral surface of the antenna insulator works well. In the illustrated embodiment, the antenna is about 0.013 inches away from the outer peripheral surface of the antenna insulator **61**. However, it should be noted that this is not a requirement and that the antenna position may vary according to the specific design of each catheter.

[0116] Referring now to the directive component or reflector **73**, it is positioned adjacent and generally parallel to a first side of the antenna, and is configured to redirect those components of the electromagnetic field contacting the reflector back towards and out of a second side of the antenna assembly **27** opposite the reflector. A majority of the electromagnetic field, consequently, is directed out of the window portion **58** of the insulator **61** in a controlled manner during ablation.

[0117] To reduce undesirable electromagnetic coupling between the antenna and the reflector **73**, the antenna **60** is preferably off-set from the reflector **73** (**FIGS. 8 and 9**). This off-set from the longitudinal axis **78** further positions the antenna **60** closer to the window portion **58** to facilitate ablation by positioning the antenna **60** closer to the targeted tissue region. It has been found that the minimum distance between the reflector and the antenna may be between about 0.020 to about 0.030 inches, in the described embodiment, in order to reduce the coupling. However, the distance may vary according to the specific design of each ablative device.

[0118] The proximal end of the reflector **73** is preferably coupled to the outer conductor **76** of the coaxial transmission line **72**. Connecting the reflector to the outer conductor serves to better define the electromagnetic field generated during use. That is, the radiated field is better confined along the antenna, to one side, when the reflector is electrically connected to the outer conductor of,the coaxial transmission line. The connection between the reflector **73** and the outer conductor **76** may be made in any suitable manner such as soldering, brazing, ultrasonic welding or adhesive bonding. In other embodiments, the reflector can be formed from the outer conductor of the transmission line itself. This is typically more difficult from a manufacturing standpoint but has the advantage of forming a more rugged connection between the reflector and the outer conductor.

[0119] In one embodiment, to improve flexibility at the electrical connection with the outer conductor **76** and entirely along the energy delivery device, the proximal end of the reflector **73** is directly contacted against the outer conductor without applying solder or such conductive adhesive bonding. In this design, the insulator material of the insulator **61** functions as the adhesive to maintain electrical continuity. This is performed by initially molding the antenna wire in the silicone insulator. The reflector **73** is subsequently disposed on the molded silicone tube, and is

extended over the outer conductor **76** of coaxial cable transmission line **72**. A heat shrink tube is then applied over the assembly to firmly maintain the electrical contact between the reflector **73** and the coaxial cable outer conductor **76**. In other embodiments, the reflector may be directly coupled to a ground source or be electrically floating.

[**0120**] As previously noted, the antenna **60** typically emits an electromagnetic field that is fairly well constrained to the length of the antenna. Therefore, in some embodiments, the distal end of the reflector **73** extends longitudinally to at about the distal end of the antenna **60** so that the reflector can effectively cooperate with the antenna. This arrangement serves to provide better control of the electromagnetic field during ablation. However, it should be noted that the actual length of the reflector may vary according to the specific design of each catheter. For example, catheters having specified ablation characteristics can be fabricated by building catheters with different length reflectors.

[**0121**] Furthermore, the reflector **73** is typically composed of a conductive, metallic material or foil. However, since the antenna assembly **27** must be relatively flexible in order to negotiate the curvilinear ablation lumen **25** of the ablation sheath **22** as the ablative device it is advanced therethrough, the insulator **61**, the antenna wire and the reflector must collectively be relatively flexible. Thus, one particularly material suitable for such a reflector is a braided conductive mesh having a proximal end conductively mounted to the distal portion of the outer conductor of the coaxial cable. This conductive mesh is preferably thin walled to the shield assembly yet provide the appropriate microwave shielding properties, as well as enable substantial flexibility of the shield device during bending movement. For example, a suitable copper mesh wire should have a diameter in the range of about 0.005 inches to about 0.010 inches, and more preferably about 0.007 inches. A good electrical conductor is generally used for the shield assembly in order to reduce the self-heating caused by resistive losses. Such conductors includes, but are not restricted to copper, silver and gold.

[**0122**] Another suitable arrangement may be thin metallic foil reflector **73** which is inherently flexible. However, to further increase flexibility, the foil material can be pleated or folded which resists tearing during bending of the antenna assembly **27**. These foils can be composed of copper that has a layer of silver plating formed on its inner peripheral surface. Such silver plating, which can also be applied to the metallic mesh material, is used to increase the conductivity of the reflector. It should be understood, however, that these materials are not a limitation. Furthermore, the actual thickness of the reflector may vary according to the specific material chosen.

[**0123**] Referring back to **FIG. 11**, the reflector **73** is preferably configured to have an arcuate or meniscus shape (e.g., crescent), with an arc angle that opens towards the antenna **60**. Flaring the reflector towards the antenna serves to better define the electromagnetic field generated during use. Additionally, the reflector functions to isolate the antenna **60** from the restraining member **63** of the ablation sheath **22** during ablation. Since the restraining member **63** is preferably metallic in composition (most preferably Nitinol), it is desirable minimize electromagnetic coupling with the antenna. Thus, the reflector **73** is preferably configured to permit at most a 180° circumferential radiation pattern from the antenna. In fact, it has been discovered that arc angles greater than about 180° are considerably less efficient. More preferably, the arc angle of the radiation pattern is in the range of about 90° to about 120°.

[**0124**] While the reflector is shown and described as having an arcuate shape, it will be appreciated that a plurality of forms may be provided to accommodate different antenna shapes or to conform to other external factors necessary to complete a surgical procedure. For example, any flared shape that opens towards the antenna may work well, regardless of whether it is curvilinear or rectilinear.

[**0125**] Further still, it should be noted that the shape of the reflector need not be uniform.

[**0126**] For example, a first portion of the reflector (e.g., distal) may be configured with a first shape (e.g., 90° arc angle) and a second portion (e.g., proximal) of the reflector may be configured with a second shape (e.g., 120° arc angle). Varying the shape of the reflector in this manner may be desirable to obtain a more uniform radiated field. It is believed that the energy transfer between the antenna and the tissue to be ablated tends to increase by decreasing the coverage angle of the reflector, and conversely, the energy transfer between the antenna and the tissue to be ablated tends to decrease by increasing the coverage angle of the reflector. Accordingly, the shape of the reflector may be altered to balance out non-uniformities found in the radiated field of the antenna arrangement.

[**0127**] In another configuration, the directive component **73** for the microwave antenna assembly **27** can be provided by another dielectric material having a dielectric constant different than that of the insulator material **67**. Indeed, a strong reflection of electromagnetic wave is observed when the wave reaches an interface created by two materials with a different dielectric constant. For example, a ceramic loaded polymer can have a dielectric constant comprised between 15 and 55, while the dielectric of a fluoropolymer like Teflon or is comprised between 2 and 3. Such an interface would create a strong reflection of the wave and act as a semi-reflector.

[**0128**] It should also be noted that the longitudinal length of the reflector need not be uniform. That is, a portion of the reflector may be stepped towards the antenna or a portion of the reflector may be stepped away from the antenna. Stepping the reflector in this manner may be desirable to obtain a more uniform radiated field. While not wishing to be bound by theory, it is believed that by placing the reflector closer to the antenna, a weaker radiated field may be obtained, and that by placing the reflector further away from the antenna, a stronger radiated field may be obtained. Accordingly, the longitudinal length of the reflector may be altered to balance out non uniformities found in the radiated field of the antenna arrangement. These associated reflectors are described in greater detail in U.S. patent application Ser. No.: 09/178,066, entitled "DIRECTIONAL REFLECTOR SHIELD ASSEMBLY FOR A MICROWAVE ABLATION INSTRUMENT, and Ser. No. 09/484,548 entitled "A MICROWAVE ABLATION INSTRUMENT WITH FLEXIBLE ANTENNA ASSEMBLY AND METHOD", each of which is incorporated by reference.

[**0129**] In a typical microwave ablation system, it is important to match the impedance of the antenna with the imped-

ance of the transmission line. As is well known to those skilled in the art, if the impedance is not matched, the catheter's performance tends to be well below the optimal performance. The decline in performance is most easily seen in an increase in the reflected power from the antenna toward the generator. Therefore, the components of a microwave transmission system are typically designed to provide a matched impedance. By way of example, a typical set impedance of the microwave ablation system may be on the order of fifty (50) ohms.

[0130] Referring back to **FIGS. 10 and 11**, and in accordance with one embodiment of the present invention, an impedance matching device **80** may be provided to facilitate impedance matching between the antenna **60** and the transmission line **72**. The impedance matching device **80** is generally disposed proximate the junction between the antenna **60** and the inner conductor **75**. For the most part, the impedance match is designed and calculated assuming that the antenna assembly **27**, in combination with the predetermined contact surface **23** of the ablation sheath **22**, is in resonance to minimize the reflected power, and thus increase the radiation efficiency of the antenna structure.

[0131] In one embodiment, the impedance matching device is determined by using a Smith Abacus Model. In the Smith Abacus Model, the impedance matching device may be ascertained by measuring the impedance of the antenna with a network analyzer, analyzing the measured value with a Smith Abacus Chart, and selecting the appropriate device. By way of example, the impedance matching device may be any combination of a capacitor, resistor, inductor, stub tuner or stub transmission line, whether in series or in parallel with the antenna. An example of the Smith Abacus Model is described in Reference: David K. Cheng, "Field and Wave Electromagnetics," second edition, Addison-Wesley Publishing, 1989, which is incorporated herein by reference. In one preferred implementation, the impedance matching device is a serial capacitor having a capacitance in the range of about 0.6 to about 1.0 Pico Farads. In the illustration shown, the serial capacitor has a capacitance of about 0.8 Pico Farads.

[0132] As above-mentioned, the impedance will be matched assuming flush contact between the antenna assembly **27** and the ablation sheath **(FIG. 9)**. In accordance with the present invention, as the antenna assembly **27** is advanced through the ablation lumen **25**, before selective ablation, it is desirable to position the window portion **58** of the flexible antenna insulator **61** in flush contact against the interior wall **62** of the ablation lumen **25**, opposite the predetermined contact surface **23**. This arrangement may substantially reduce the impedance variance caused by the interface between insulator **61** and the ablation sheath **22** as the directional field is transmitted therethrough. In comparison, if the window portion **58** were not required to be positioned in flush contact against the interior wall **62** of the ablation lumen, pockets of air or fluid, or the like, may be disposed intermittently therebetween which would result in a greater degree of impedance variations at this interface. Consequently, the above-indicated impedance matching techniques would be less effective.

[0133] To assure such flush contact during selective directional ablation and advancement along the sheath ablation lumen, the ablation system **20** preferably incorporates a forcing mechanism **81 (FIGS. 8 and 9)** adapted to urge the window portion **58** of the antenna assembly **27** into flush contact against the interior wall **62** of the ablation sheath. Preferably, the forcing mechanism cooperates between a support portion **82** of the interior wall **62** of the ablation lumen **25** and the forcing wall portion **83** of the antenna assembly.

[0134] When not operational, the forcing mechanism permits relative axial displacement between the ablative device **26** and the ablation sheath for repositioning of the antenna assembly **27** along the ablation path **28 (FIG. 8)**. Upon selective operation, the forcing mechanism **81** contacts the forcing wall portion **83** to urge window portion **58** flush against the interior wall **62** opposite the predetermined contact surface **23**. Consequently, the impedance match between the antenna and the transmission line is properly achieved and stable even when the antenna is moving in the ablation sheath.

[0135] In one embodiment, the forcing mechanism may be provided by an inflatable structure acting between the support portion **82** of the interior wall **62** of the ablation lumen **25** and the forcing wall portion **83** of the antenna assembly device. Upon selective inflation of forcing mechanism **81 (FIG. 9)**, the window portion **58** will be urged into flush contact with the interior wall **62** of the ablation lumen.

[0136] Upon selective deflation of the forcing mechanism **81 (FIG. 8)**, relative axial displacement between the antenna assembly **27** and the ablation sheath may commence. The forcing mechanism can be provided by other techniques such as spring devices or the like.

[0137] In accordance with another aspect of the present invention, the ablative energy may be in the form of laser energy sufficient to ablate tissue. Example of such laser components include CO_2 or Nd: YAG lasers. To transmit the beams, the transmission line **72** is preferably in the form of a fiber optic cable or the like.

[0138] In this design, as shown in **FIGS. 14A and 14B**, the directive component **73** may be provided by a reflector having a well polished smooth reflective or semi-reflective surface. This preferably metallic reflective surface is configured to reflect the emitted laser energy toward the targeted tissue region. By way of example, functional metallic materials include silver or platinum. In another configuration, similar to the difference in dielectric constants of the microwave ablation device **26**, the directive component of the laser ablative device may be provided between two layers of dielectric materials with a sufficient difference between the refractory indexes. Here, at least one dielectric directive component layer functions like the outer dielectric layer of the fiber optic transmission line **72** to obtain "total internal reflection". Consequently, the laser energy can be emitted away from the dielectric layer. By providing more than one dielectric layer, "total internal reflection" may be attained at several angles of incidence. Again, the reflection of the electromagnetic wave is caused by the interface between two media having different dielectric constants. Generally speaking, the higher is the difference between the dielectric constants, the more significant is the internal reflection. In addition, when more than one dielectric layer are involved, interference can be used to direct the laser energy in a preferred direction.

[0139] Moreover, when the ablative energy is laser based, it will be appreciated that it is desirable that both the ablation

sheath **22** and the ablation device be composed of materials which have a low scattering coefficient and a low factor of absorption. In addition, it is also preferable to use material with low water absorption.

[**0140**] It will be appreciated that a plurality of designs can be used for the laser energy delivery portion. For example, the laser energy delivery portion can consist of multiple reflective particles embedded in a laser transparent material. The laser wave is propagating from the laser generator to the optic fiber transmission line and enter in the laser energy delivery portion. The embedded reflective particles diffracts the light, which is reflected toward the tissue to be ablated by the directive component **73**.

[**0141**] In yet another alternative embodiment, cryogenic energy may be employed as an ablative energy. Briefly, as shown in **FIGS. 15A and 15B**, in these cryogenic ablation device designs, a cryogenic fluid, such as a pressurized gas (like Freon for example) is passed through an inflow lumen **90** in the ablation device transmission line **72**. The distal ablative device **26** is preferably provided by a decompression chamber which decompresses the pressurized gas from the inflow lumen **90** therein. Upon decompression or expansion of the pressurized gas in the decompression chamber **91**, the temperature of the exterior surface **92** of the decompression chamber is sufficiently reduced to cause tissue ablation upon contact thereof The decompressed gas is then exhausted through the outflow lumen **93** of the transmission line **72**.

[**0142**] **FIG. 15B** illustrates that the directive component **73** is in the form of a thermal insulation layer extending longitudinally along one side of the energy delivery portion **27**. By forming a good thermal insulator with a low thermal conductivity, the C-shaped insulation layer **73** will substantially minimize undesirable cryogenic ablation of the immediate tissue surrounding of the targeted tissue region. In one configuration, the isolation layer may define a thin, elongated gap **95** which partially surrounds the decompression chamber **91**. This gap **95** may then be filled with air, or an inert gas, such as CO_2, to facilitate thermal isolation. The isolation gap **95** may also be filled with a powder material having relatively small solid particulates or by air expended polymer. These materials would allow small air gaps between the insulative particles or polymeric matrix for additional insulation thereof. The isolation layer may also be provided by a refractory material. Such materials forming an insulative barrier include ceramics, oxides, etc.

[**0143**] Referring now to **FIG. 16**, an ultrasound ablation device may also be applied as another viable source of ablation energy. For example, a piezoelectric transducer **96** may be supplied as the ablative element which delivers acoustic waves sufficient to ablate tissue. These devices emit ablative energy which can be directed and shaped by applying a directive echogenic component to reflect the acoustic energy. Moreover, a series or array of piezoelectric transducers **96**, **96'** and **96"** can be applied to collectively form a desired radiation pattern for tissue ablation. For example, by adjusting the delay between the electrical exciting signal of one transducer and its neighbor, the direction of transmission can be modified. Typical of these transducers include piezoelectric materials like quartz, barium oxides, etc.

[**0144**] In this configuration, the directive component **73** of the ultrasonic ablation device may be provided by an echogenic material (**73-73"**) positioned proximate the piezoelectric transducers. This material reflects the acoustic wave and which cooperates with the transducers to direct the ablative energy toward the targeted tissue region. By way of example, such echogenic materials are habitually hard. They include, but are not restricted to metals and ceramics for example.

[**0145**] Moreover, when the ablative energy is ultrasonic based, it will be appreciated that it is desirable that both the ablation sheath **22** and the ablation device be composed of materials which have low absorption of the acoustic waves, and that provide a good acoustic impedance matching between the tissue and the transducer. In that way, the thickness and the material chosen for the ablation sheath play in important role to match the acoustic properties of the tissue to be ablated and the transducer. An impedance matching jelly can also be used in the ablation sheath to improve the acoustic impedance matching.

[**0146**] Lastly, the ablation device may be provided by a radiofrequency (RF) ablation source which apply RF conduction current sufficient to ablate tissue. These conventional ablation instruments generally apply conduction current in the range of about 450 kHz to about 550 kHz. Typical of these RF ablation devices include ring electrodes, coiled electrodes or saline electrodes.

[**0147**] To selectively direct the RF energy, the directive component is preferably composed of an electrically insulative and flexible material, such as plastic or silicone. These biocompatible materials perform the function of directing the conduction current toward a predetermined direction.

[**0148**] In an alternative embodiment, as best viewed in **FIG. 17**, the window portion **58** of the ablation sheath **22** is provided by an opening in the sheath along the ablation path, as opposed to being merely transparent to the energy ablation devices. In this manner, when the ablation sheath **22** is properly positioned with the window portion placed proximate and adjacent the targeted tissue, the energy delivery portion **27** of the ablation device **26** may be slidably positioned into direct contact with the tissue for ablation thereof. Such direct contact is especially beneficial when it is technically difficult to find a sheath that is merely transparent to the used ablative energy. For example, it would be easier to use a window portion when RF energy is used. The ablative RF element could directly touch the tissue to be ablated while the directive element would be the part of the ablation sheath **22** facing away the window portion **58**. Furthermore, during surgical ablation, the window portion could be used by the surgeon to indicate the area where an ablation can potentially be done with the energy ablation device.

[**0149**] In yet another embodiment, the ablation system **20** may be in the form of a rail system including a rail device **96** upon which the ablation device **26** slides therealong as compared to therethrough. **FIGS. 18 and 19** illustrate the rail device **96** which is preferably pre-shaped or bendable to proximately conform to the surface of the targeted tissue. Once the rail device **96** is positioned, the ablation device can be advanced or retracted along the path defined by the rail device for ablation of the targeted tissue **21**.

[**0150**] The ablation device **26** in this arrangement includes a body portion **98** housing the energy delivery portion **27** therein. The window portion **58** is preferably extend longi-

tudinally along the outer surface of one side of the housing. An opposite side of the housing, and longitudinally oriented substantially parallel to the window portion **58** is a rail receiving passage **97** formed and dimensioned to slidably receive and slide over the rail device **96** longitudinally therethrough. In one configuration, the energy delivery portion **27** may be advanced by pushing the body portion **98** through the transmission line **72**. Alternatively, the energy delivery portion **27** may be advanced by pulling the body portion **98** along the path of the rail system **20**.

[**0151**] As best viewed in **FIG. 19**, the directive component **73** of the ablation device **26** is integrally formed with the body portion **98** of the ablation device. This preferably C-shaped component extends partially peripherally around the energy delivery portion **27** to shield the rail device **96** from exposure to the ablative energy. Depending upon the type of ablative energy employed, the material or structure of the directive component **73** can be constructed as set forth above.

[**0152**] To assure the directional position and orientation of the window portion **58** of the ablative device toward the targeted tissue, a key structure **48** is employed. Generally, the transverse cross-sectional dimension of the rail device **96** and matching rail receiving passage **97** is shaped to assure proper directional orientation of the ablative energy. Examples of such key forms are shown in FIGS. **20**A-**20**B.

[**0153**] As with the previous embodiments, the open window embodiment and the rail system embodiment may employ multiple ablative element technology. These include microwave, radiofrequency, laser, ultrasound and cryogenic energy sources.

[**0154**] In accordance with another aspect of the present invention, the tissue ablation system further includes a temperature sensor which is applied to measure the temperature of the ablated tissue during the ablation. In one embodiment, the temperature sensor is mounted to the ablation device proximate the energy delivery portion **27** so that the sensor moves together with the energy delivery portion as it is advanced through the ablation sheath. In another embodiment, the temperature sensor is attached on the ablation sheath.

[**0155**] To determine the temperature of the ablated tissue, a mathematical relationship is used to calculate the tissue temperature from the measured temperature. Typical of such temperature sensors include a metallic temperature sensor, a thermocouple, a thermistor, or a non-metallic temperature sensor such as fiber optic temperature sensor.

[**0156**] In accordance with the present invention, the guide sheath **52** and the ablation sheath **22** can be designed and configured to steer the ablative device along any three dimensional path. Thus, the tissue ablation system of present invention may be adapted for an abundance of uses. For instance, the distal end portion of the ablation sheath can be configured to form a closed ablation path for the ablation device. This design may be employed to ablate around an ostium of an organ, or to electrically isolate one or several pulmonary veins to treat atrial fibrillation. A closed ablation path may also utilized to ablate around an aneurysm, such as a cardiac aneurysm or tumor, or any kink of tumor. In other example, the ablation sheath can be inserted in an organ in order to ablate a deep tumor or to perform any surgical treatment where a tissue ablation is required.

[**0157**] In other instances, the distal end portion of the ablation sheath **22** may define a rectilinear or curvilinear open ablation path for the ablation device. Such open ablation paths may be applied to ablate on the isthmus between the inferior vena cava vein (IVC) and the tricuspid valve (TV), to treat regular flutter, or to generate a lesion between the IVC and the SVC, to avoid macro-reentry circuits in the right atrium. Other similar ablation lesions can be formed between: any of the pulmonary vein ostium to treat atrial fibrillation; the mitral valve and one of the pulmonary veins to avoid macro-reentry circuit around the pulmonary veins in the left atrium; and the left appendage and one of the pulmonary veins to avoid macro-reentry circuit around the pulmonary veins in the left atrium.

[**0158**] The ablation apparatus may be applied through several techniques. By way of example, the ablation apparatus may be inserted into the coronary circulation to produce strategic lesions along the endocardium of the cardiac chambers (i.e., the left atrium, the right atrium, the left ventricle or the right ventricle). Alternatively, the ablation apparatus may be inserted through the chest to produce epicardial lesions on the heart. This insertion may be performed through open surgery techniques, such as by a sternotomy or a thoracotomy, or through minimally invasive techniques, applying a cannula and an endoscope to visualize the location of the ablation apparatus during a surgery.

[**0159**] The ablation apparatus is also suitable for open surgery applications such as ablating the exterior surfaces of an organ as well, such as the heart, brain, stomach, esophagus, intestine, uterus, liver, pancreas, spleen, kidney or prostate. The present invention may also be applied to ablate the inside wall of hollow organs, such as heart, stomach, esophagus, intestine, uterus, bladder or vagina. When the hollow organ contains bodily fluid, the penetration port formed in the organ by the ablation device must be sealed to avoid a substantial loss of this fluid. By way of example, the seal may be formed by a purse string, a biocompatible glue or by other conventional sealing devices.

[**0160**] As mentioned, the present invention may be applied in an intra-coronary configuration where the ablation device is used to isolate the pulmonary vein from the left atrium. **FIG. 2C** illustrates that a distal end of the ablation sheath **22** is adapted for insertion into the pulmonary vein. In this embodiment, the distal end of the ablation device may include at least one electrode used to assess the electrical isolation of the vein. This is performed by pacing the distal electrode to "capture" the heart. If pacing captures the heart, the vein is not yet electrically isolated, while, if the heart cannot be captured, the pulmonary vein is electrically isolated from the left atrium. As an example, a closed annular ablation on the posterior wall of the left atrium around the ostium of the pulmonary vein by applying the pigtail ablation sheath **22** of **FIGS. 2 and 4**.

[**0161**] In yet another configuration, the ablation device may include a lumen to inject a contrasting agent into the organ. For instance, the contrasting agent facilitates visualization of the pulmonary vein anatomy with a regular angiogram technique. This is important for an intra-coronary procedure since fluoroscopy is used in this technique. The premise, of course, is to visualize the shape and the distal extremity of the sheaths, as well as the proximal and distal part of the sliding energy delivery portion during an ablative

procedure under fluoroscopy. It is essential for the electrophysiologist to be able to identify not only the ablative element but also the path that the ablation sheath will provide to guide the energy delivery portion **27** therealong.

[**0162**] Another visualization technique may be to employ a plurality of radio-opaque markers spaced-apart along the guide sheath to facilitate location and the shape thereof. By applying the radio-opaque element that will show the shape of the sheath. This element can be a metallic ring or soldering such as platinum which is biocompatible and very radio-opaque. Another example of a radio-opaque element would be the application of a radio-opaque polymer such as a beryllium loaded material. Similarly, radio-opaque markers may be disposed along the proximal, middle and distal ends of the energy delivery portion **27** to facilitate the visualization and the location of the energy delivery portion when the procedure is performed under fluoroscopy.

[**0163**] To facilitate identification of the distal end portion of the ablation sheath, a fluoro-opaque element may be placed at the distal extremity. Another implementation of this concept would be to have different opacities for the ablation sheath and the energy delivery portion **27**. For example, the energy delivery portion may be more opaque than that of the ablation sheath, and the ablation sheath may be more opaque than the trans-septal sheath, when the later is used.

[**0164**] The surgical ablation device of the present invention may also be applied minimally invasively to ablate the epicardium of a beating heart through an endoscopic procedure. As viewed in **FIGS. 21 and 22**, at least one intercostal port **85** or access port is formed in the thorax. A dissection tool (not shown) or the like may be utilized to facilitate access to the pericardial cavity. For instance, the pericardium may be dissected to enable access to the epicardium of a beating heart. The pericardial reflections may be dissected in order to allow the positioning of the ablation device **26** around the pulmonary veins. Another dissection and positioning tool **100**, described in more detail below, may also be utilized to puncture the pericardial reflection located in proximity to a pulmonary vein and assist in positioning the ablation device housed therein. After the puncture of the pericardial reflection, the ablation sheath can be positioned around one, or more than one pulmonary vein in order to produce the ablation pattern used to treat the arrhythmia, atrial fibrillation in particular.

[**0165**] For example, a guide sheath **52** may be inserted through the access port **85** while visualizing the insertion process with an endoscopic device **86** positioned in another access port **87**. Once the guide sheath **52** is properly positioned by handle **88**, the ablation sheath **22** may be inserted through the guide sheath, while again visualizing the insertion process with the endoscopic system to position the ablation sheath on the targeted tissue to ablate. The ablation device may then be slid through the ablation lumen of the ablation sheath and adjacent the targeted tissue. Similar to the previous ablation techniques, the ablative element of the ablation device may be operated and negotiated in an overlapping manner to form a gap free lesion or a plurality of independent lesions. The ablation sheath may also be malleable or flexible. The surgeon can use a surgical instrument, like a forceps, to manipulate, bend and position the ablation sheath.

[**0166**] With reference also made to FIGS. **23**A-C, a dissection and positioning tool **100** will now be described, in accordance with the present invention. As stated above, the dissection and positioning tool **100** allows a surgeon to gain access to, and further position medical instruments, such as the ablation system described herein, at various surgical sites throughout the body, especially during minimally invasive surgical procedures on the beating heart. More specifically, tool **100** further enables a surgeon to place the ablation device of an ablation instrument, or other medical instrument, adjacent to the outer surfaces of bodily structures along a predetermined lesion path, surrounding the structure for example. For illustration purposes only, the positioning tool **100** provides better access to the pulmonary truck and, more specifically, the individual pulmonary veins, during minimally invasive procedures facilitating placement of an ablation device adjacent to one or more pulmonary veins.

[**0167**] As shown in **FIGS. 23A and 23B**, positioning tool **100** comprises a handle **102** and a guide sheath **104** having a deflectable tip **106** operably attached to the distal end of sheath **104**. Guide sheath **104** and tip **106** may be made from any suitable biocompatible material, such as those materials described herein with respect to sheath **52**.

[**0168**] As will become readily apparent, an attachment point **108** may be utilized to permit the deflection of tip **106** along at least one plane allowing the distal end of tip **106** to more readily engage specific tissue at predetermined locations throughout the patients body. Attachment point **108** may be comprised of any suitable system allowing deflection of tip **106**. For illustration purposes only, attachment point **108** may be formed by a matching node/recess pair. In this example, with reference also made to **FIG. 23**C, the distal end of sheath **104** comprises one or more nodes **114**, preferably two, protruding from the external surface of the distal end of sheath **104**. In turn, tip **106** comprises on or more matching recesses **116** which accept nodes **114** providing retention and holding tip **106** in a rotatably fixed position relative to sheath **104**.

[**0169**] Alternatively, with reference to **FIG. 23**D, attachment point **108** could be achieved by one or more pins or rods passing through the distal portion of sheath **104** and the proximal portion of tip **106** at attachment point **108**, defining a fulcrum about which tip **106** rotates. For example, attachment point **108** may comprise two rods **120**, each passing through only the sheath **104** and tip **106** material, allowing for medical instruments to pass through sheath **104** and tip **106**.

[**0170**] The tip portion **106** is deflectable with respect to sheath **104** through activation of a deflection means (not shown) as part of tool **100**. **FIGS. 23A & 23B** depict tip **106** in an un-deflected and a deflected position, respectively, along one plane, with the distal end of tip **106** rotating about the attachment point **108** as indicated by arrow R. The deflection means may be any suitable means including, but not limited to, systems comprising one or more pull wires, springs of various shapes and configurations, sliders, switches, or motors, alone or in combination, allowing for the deflection of tip **106** in at least one plane. For example, tip **106** can be held in an un-deflected position relative to sheath **104** by a spring as part of a deflection means located at attachment point **108**. Tension force applied to the distal end of tip **106**, via one or more pull cables, overcomes the

spring force and results in the deflection of tip **106**. As the tension force is removed, the spring force acts to return tip **106** to its un-deflected position.

[**0171**] With reference also to **FIG. 23**C, tip **106** may be U-shaped along its longitudinal axis and may further comprise a retractable sharp distal tip **112** which further aides in dissection of bodily membranes, the pericardial reflection for example. While the distal tip **106** may be used to dissect or otherwise advance through tissue, sharp tip **112** encourages and assists with such advancement. For example, sharp tip **112** may assist in the dissection of the pericardial reflection allowing a medical instrument, ablation instrument **20** for example, to be positioned around the pulmonary veins for creation of a continuous transmural lesion, as described in more detail above. As should be readily understood, the recess defined by the U-shaped tip **106** acts to deflect medical instruments to facilitate proper placement with respect to a target tissue site. It should be apparent that if tool **100** is incorporated into and part of a medical instrument, as discussed in more detail below, tip **106** may comprise at least one lumen, accepting a slidably disposed medical instrument which passes from within sheath **104** and tip **106**.

[**0172**] Deflectable tip **206** may also comprise an illumination means (not shown) operably attached to tip **206** such that light energy emitting therefrom aides in positioning of tip **206**, especially during minimally invasive procedures. For example, when the tip **206** is advanced behind and around a bodily structure, the light energy provides an indication of where tip **206** is located. The illumination means may be any suitable source of light energy including, but not limited to, light emitting diodes, incandescent light sources, or any other sources which fluoresce and are compatible with corresponding light sensing systems utilized. The illumination means may provide light energy in the visible or non-visible range.

[**0173**] Sharp tip **112** is slidably disposed within tip **106** such that it can be retracted to a safe position when not in use. The tip **112** may be slidably affixed within the tip **106** itself or may be slidably attached to handle **102**, passing through sheath **104** in an inner lumen (not shown) protecting the sheath **104** from sharp tip **112** translating therein. The tip **112** is controlled through any suitable activation means including, but not limited to, spring activated or pull wire systems. For example, tip **112** may be operably attached to a spring which, when triggered, allows for the instantaneous advancement of sharp tip **112** out from tip **106**, the sharp tip **112** engaging adjacent tissue.

[**0174**] Alternatively, tip **112** activation means may be incorporated within or otherwise part of the deflection means of tip **106** described above. For illustration purposes only, the deflection means may comprise a slider in the handle portion operably attached to a pull wire and the tip **112**. With the slider in a first position, the tip **106** is un-deflected and the sharp tip **112** is retracted to a point at least just within the distal end of tip **106**. When the slider is advanced to a second position, the tip **106** is deflected such that the longitudinal axis of tip **106** defines a predetermined angle, indicated as arrow A in **FIG. 23**B, with the longitudinal axis of sheath **104**. Finally, with the slider advanced to a third position, while the tip **106** remains rotatably fixed relative to the sheath **104**, the sharp tip **112** may protrude from the distal end of the tip **106** a predetermined distance. In this way, the tip **106** of the tool **100** can be positioned at a predetermined location prior to activation of the sharp tip **112**. The predetermined angle may be selected by a second slider, for example, such that operation of the tip **106**, as discussed immediately above, may be performed in one controlled movement of the first slider.

[**0175**] The predetermined angle about which tip **106** is rotated with respect to sheath **104** can be any value between 0° and approximately 180°, 0° being defined as the angle A formed by the longitudinal axes of tip **106** and sheath **104** when tip **106** is in an un-deflected position, as shown in **FIG. 23A**. Further, it should be readily understood that tip **106** and sheath **104** can be of any suitable length with respect to each other allowing for differing configurations of tool **100** enabling tip **106** to engage tissue at any predetermined tissue site within a patient's body. Additionally, as should be readily apparent, sheath **104** may be slidably attached to handle **102** allowing for the extension and retraction of sheath **104** within handle **102** resulting in greater control over the placement of tip **106**.

[**0176**] As is shown in **FIGS. 23A and 23C**, tip **106** may be formed having suitable dimensions allowing for passage of various medical instruments therethrough. Tip **106** may also include different geometric surfaces, such as lobe **110**, which aide to move bodily structures away from sharp tip **112** as tip **106** is advanced and further provide clearance around the bodily structures for passage of the medical instrument. For example, after piercing of the pericardial reflection between a pulmonary vein and the superior vena cava, the tip **106** may be advanced, the lobe **110** slightly displacing the pulmonary vein allowing for passage of a medical instrument, such as ablation system **20**.

[**0177**] Turning back to **FIG. 21**, in operation, tool **100** can be passed through access port **87**A (not shown) and advanced into the body. As discussed above, the tool **100** is manipulated to position the distal tip **106** at a predetermined location and orientation within the body to facilitate positioning of a medical instrument system, such as an ablation system, at a target tissue site. The target tissue site may comprise, for example, a circumferential portion of the external surface of a biological structure, the heart for example.

[**0178**] Additionally, if applicable, tool **100** is manipulated until the distal tip **106** nears or engages tissue to be dissected. At this point tip **106** is positioned at a predetermined angle with respect to sheath **104** and is proximate to the tissue. Sharp tip **112** is then advanced passed the distal end of tip **106** engaging the tissue and creating an opening therethrough. Once the opening is created, tool **100** can be retracted and the medical instrument system advanced therethrough allowing access to target tissue sites beyond the dissected tissue. The medical instrument system, for example, may be an ablation system as described herein which can be passed therethrough and further advanced along an ablation path.

[**0179**] As should be readily apparent, the functionality of tool **100** can be incorporated into the ablation system **20** itself For example, tip **106** may be attached to the distal end of guide sheath **52**, in a manner described above. In this configuration, tip **106** would act to further deflect or otherwise direct the ablation sheath which passes therethrough

such that at least a portion of the ablation element of the ablation system is deflected and positioned at a desired target tissue site. Alternatively, with reference to **FIG. 24**, the deflectable tip can be integral to the guide sheath itself.

[**0180**] **FIG. 24** depicts tool **200** comprising a guide sheath **204** having at least one lumen and a deflectable tip **206**, and an inner sheath **220** slidably disposed within the at least one lumen of sheath **204**. Sheath **204** has at least one lumen passing therethrough and an angled needle tip **212** at its distal end. The medical instrument, ablation system **20** for example, is slidably disposed within the at least one lumen of inner sheath **220**. In operation, as with tool **100**, tool **200** is first advanced within a patient's body, the deflectable tip **206** being positioned adjacent a target tissue site. In this way the medical instrument can be slidably advanced through the inner sheath **220**, at least a portion of the medical instrument being deflected and positioned adjacent to the target tissue site.

[**0181**] As with the sharp tip **112** of tool **100**, inner sheath **220** can be translated within inner sheath **220** such that the distal end of needle tip **212** passes through the distal opening of deflectable tip **206**, engaging and penetrating tissue to be dissected and creating an opening therethrough for at least a portion of the medical instrument to pass. The needle tip **212** of the inner sheath **220** is angled in such a way as to encourage the creation of an opening in the tissue, rather than removal of the tissue itself. As with the tool **100** embodiments above, the deflectable tip **206** may act to deflect and position the medical instrument such that at least a portion of the medical instrument is adjacent to a target tissue site.

[**0182**] Furthermore, it should be understood that tool **100**, **200** may be utilized with any ablation system, as a separate tool or as part of the ablation system itself. For example, tool **100**, **200** could be used along with or as part of the ablation instrument as described in U.S. patent application Ser. No. 09/484,548, which is incorporated herein by reference, in its entirety.

[**0183**] Now with reference to **FIG. 23**D, another embodiment of the dissection and positioning tool **100** is depicted having an alternate tip **106**A. Tip **106**A comprises a grasping means **118** at its distal end. Grasping means **118** allows a surgeon to grasp a surgical instrument during operative procedures enabling the surgeon to place the surgical instrument adjacent to the outer surfaces of bodily structures, surrounding the structure for example.

[**0184**] For illustration purposes only, the positioning tool **100** as depicted in **FIG. 23D** may be passed through the pericardial reflection from an inferior vena cava access point, as discussed above. Once the tip **106**A passes through the pericardial reflection, the grasping means **118** would then grasp the distal tip of a medical instrument, such as the ablation system **20**, and retract the instrument, further guiding and positioning the instrument adjacent to the pulmonary trunk, from the transverse sinus to the inferior pulmonary vein sinus and finally back out to the inferior vena cava access point.

[**0185**] More specifically, the distal end of ablation system **20**, such as the ablation guide **22** for example, incorporates a grasping surface (not shown) suitable for grasping by grasping means **118**. The distal tip of tool **100** is passed through the pericardial reflection as described above, and the grasping means **118** as part of the tip **106**A grasps or otherwise engages and holds onto the grasping surface. The tool **100** is then retracted along with the ablation guide **22**, back out the inferior vena cava access point resulting in the proper positioning of the ablation guide **22** and, ultimately, the ablation device **26** slidably disposed therein. Once positioned, tissue ablation occurs as described in greater detail above.

[**0186**] The grasping means can be any suitable means compatible with the medical instrument. For example, the distal end of the instrument may comprise an opening allowing for placement of a suture thereon. The grasping means **118** of tool **100** as part of tip **106**A may be in the form of a pair of pivoted jaws **120**, at least one of the jaws being movable with respect to the other enabling the jaws **120** to close upon the suture, grasping or otherwise holding onto the suture for retraction by tool **100** as described above. The pivot point of the pivoted jaws **120** may form part of attachment point **108** as described above.

[**0187**] Alternatively, the grasping means **118** may be in the form of a hook and loop system (not shown), the hook disposed on the distal end of tip **106**A and the loop formed as a structural part of the distal end of the ablation device or formed with a suture as described immediately above. Additionally, tip **106** may further comprise a blunt barb (not shown) for grasping a suture or other loop as part of the distal end of an ablation device allowing for retraction of the ablation device as discussed above.

[**0188**] In accordance with yet another aspect of the present invention, the guide sheath, or ablation sheath, or ablation element could be controlled by a robot during a robotic minimally invasive surgical procedure. The robot could indeed telescopically translate or rotate the guide sheath, or the ablation sheath, or the ablation element in order to position the ablation sheath and the ablation element correctly to produce the ablation of tissue. The robot could also perform other tasks to facilitate the access of the ablation sheath to the tissue to be ablated. These tasks include, but are not limited to: performing the pericardial reflection in the area of a pulmonary vein; performing an incision on the pericardial sac; manipulating, bending or shaping the ablation sheath; or performing an incision on an organ to penetrate the ablation sheath through the penetration hole.

[**0189**] In accordance with yet another aspect of the present invention, the concept of using a sliding ablation element in an ablation sheath to ablate from the epicardium of a beating heart can also be applied in open chest surgery. In this procedure, a malleable ablation sheath may be beneficial, as compared to a pre-shaped ablation sheath. For example, a malleable metallic wire (e.g., copper, stainless steel, etc . . .) could be integrated into the ablation sheath. The cardiac surgeon will then shape the ablation sheath to create the ablation path that he wants and will finally produce the ablation line by overlapping several ablations

[**0190**] In this technique, it is important to note that the ablation sheath must be stabilized against the epicardium since the ablation sheath will define the ablation path of the energy delivery portion. Should the ablation sheath be inadvertently moved during the process, the final ablation line may be undesirably discontinuous. Thus, a securing

device may be applied to secure the ablation sheath against the epicardium. Such a securing device may include stitches or the like which may be strung through receiving holes or cracks placed in the ablation sheath. Another device to anchor the ablation sheath to the epicardium may be in the form of a biocompatible adhesive, or a suction device.

[0191] In accordance with yet another aspect of the present invention, a way to visually locate the ablation element within the ablation sheath is provided to the surgeon. In one embodiment of the invention, the ablation sheath is transparent and the ablation element can be directly visualized, or indirectly visualized via an endoscope. In yet another embodiment of the application, a marking element that can be directly visually identify along the ablation sheath, or indirectly visualized via an endoscope, is used to identify the location of the ablation element within the sheath. The marking element is sliding with the ablation element to show the location of the ablation element.

[0192] In accordance with yet another aspect of the present invention, a way to indirectly locate the ablation element within the ablation sheath is provided to the surgeon. A position finding system is incorporated in the handle of the device to indicate the position of the ablation element within the ablation sheath. At least one marker can be directly visually, or indirectly visually identified. These markers can be used in collaboration with the position finding system as reference points to identify the location of the ablation element.

[0193] While the present invention has been primarily described and applied for epicardial tissue ablations, it will be appreciated that the ablation system **20** may just as easily apply to endocardial tissue ablations as well. The tissue ablations may be performed through either open surgery techniques or through minimal invasive techniques.

[0194] Although the foregoing invention has been described in some detail for purposes of clarity of understanding, it will be apparent that certain changes and modifications may be practiced within the scope of the appended claims.

What is claimed is:

1. A device to position a medical instrument during a surgical procedure, comprising:

a handle;

a guide sheath operably attached to the handle and having a deflectable distal end comprising a grasping means for grasping a distal end of the medical instrument; and

a deflection means for deflecting the distal end of the guide sheath.

2. The device of claim 1, wherein the grasping means is a hook configured to grasp the medical device.

3. The device of claim 1, wherein the grasping means is a pair of pivoted jaws operably attached to the deflectable distal end and configured to grasp the medical device.

4. The device of claim 1, wherein the medical instrument is an ablation system.

5. A method of positioning a medical instrument within a patient's body during a surgical procedure, comprising the steps of:

providing a positioning tool comprising a guide sheath having a deflectable distal end, the deflectable distal end comprising a grasping means for grasping the medical instrument;

introducing the guide sheath into the patient's body along a first path;

deflecting the deflectable distal end of the sheath;

introducing the medical instrument into the patient's body along a second path;

grasping the medical instrument with the grasping means;

retracting the guide sheath along the first path,

wherein at least a portion of the medical instrument is operably placed adjacent a target tissue site.

* * * * *