C. F. ROBBINS.

PRINTING MACHINE.

APPLICATION FILED JULY 17, 1913.

1,118,051. Patented Nov. 24, 1914.

Fig. 5.

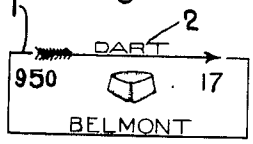

Fig. 6.

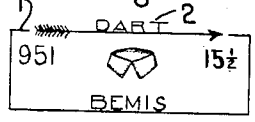

Fig. 1.

Fig. 4.

Fig. 2.

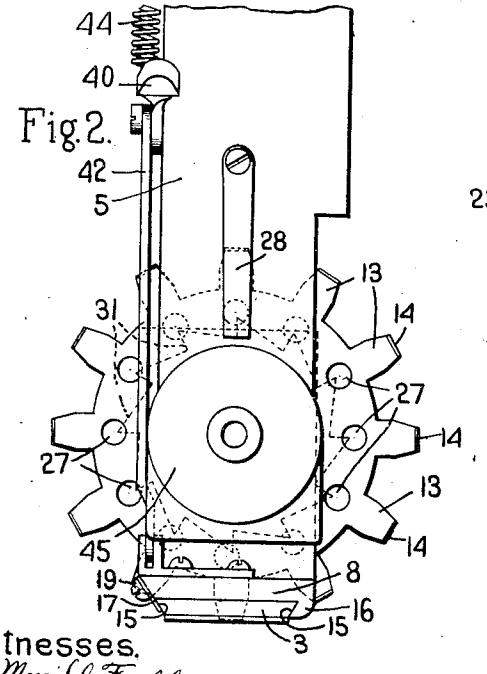

Fig. 3.

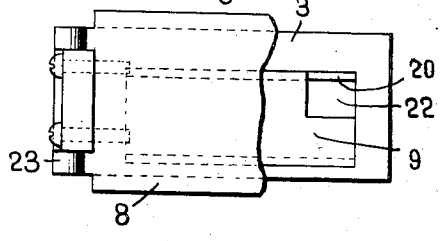

Fig. 7.

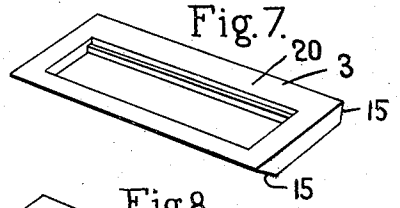

Fig. 8.

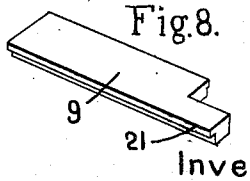

Witnesses.

J. Morrill Fuller

Joseph D. Ashe.

Inventor.

Charles F. Robbins,

by Heard Smith & Tennant.

Atty's.

UNITED STATES PATENT OFFICE.

CHARLES F. ROBBINS, OF ABINGTON, MASSACHUSETTS, ASSIGNOR TO MARKEM MACHINE COMPANY, OF BOSTON, MASSACHUSETTS, A CORPORATION OF MASSACHUSETTS.

PRINTING-MACHINE.

1,118,051. Specification of Letters Patent. Patented Nov. 24, 1914.

Application filed July 17, 1913. Serial No. 779,430.

To all whom it may concern:

Be it known that I, CHARLES F. ROBBINS, a citizen of the United States, residing at Abington, county of Plymouth, State of Massachusetts, have invented an Improvement in Printing-Machines, of which the following description, in connection with the accompanying drawing, is a specification, like characters on the drawing representing like parts.

This invention relates to printing machines and particularly to the head carrying the printing members.

The object of the invention is to provide a novel printing machine having a construction which will permit of the printing of impressions which comprises a permanent or unchangeable portion and another portion which changes or varies and in which the changing or variable parts of the printed impression is situated in close proximity to the unchangeable part. As an illustration of this kind of impression I would refer to the matter which is usually printed on the labels which are commonly used on collar boxes. Some of these labels have printed thereon some characters or marks, such for instance as the name of the manufacturer or trademark which is the same for all brands of collars produced by a certain maker, and a name or number or both to designate the style of collar which, of course, will be different for different styles of collars, and a number to designate the size of the collar which, of course, will vary for different styles. On some labels the non-changeable portion of the printed impression includes a boarder within which the changeable portions of the impression are located.

My invention is designed to make printed impressions of the above type directly on the boxes thus obviating the necessity of first printing labels and then applying the labels to the boxes; and while I have referred to the printed matter usually put on collar boxes as illustrative of the type of impression my invention is especially adapted to print, yet I wish it clearly understood that the invention is equally adaptable for making any printed impression which comprises fixed or unchanging characters and other characters which vary with the style, size, quality or other characteristics of the article designated by the printed impression.

I will first describe a selected embodiment of my invention and then point out the novel features thereof in the appended claims.

Referring to the drawings Figure 1 is a front view of a printing head embodying my invention. Fig. 2 is a side view thereof. Fig. 3 is a top plan view with a part broken out of the holder for the type plates. Fig. 4 is a section on the line x—x, Fig. 1. Figs. 5 and 6 show two different impressions which can be printed by my improved machine. Figs. 7 and 8 are perspective views of the two type plates.

The complete printing machine will include a printing couple by which the desired impression is made, and which comprises a platen and a printing head carrying the type members and suitable mechanism for inking or otherwise supplying a printing compound to the type members. Inasmuch, however, as my invention does not relate to the printing machine as a whole, but only to the printing head, I have not considered that it is necessary to illustrate an entire printing machine, and have therefore, confined the illustration in the drawings to a printing head. This printing head is designed to be supported for movement toward and from the platen and it carries the type members by which the impression is made.

Before describing the invention in detail, I will refer to a selected style of printed impression by means of which the object of the invention can more readily be explained. In Figs. 5 and 6 I have shown two printed impressions as might be used on collar boxes, for instance, these impressions comprise a permanent mark which may be a trademark or the name of the party producing the goods, and which is herein shown as a border 1 having associated therewith some especial designation or mark 2 and also the name of the manufacturer; a style-indicating part which in the impression shown is a word designating the style of the collar, a picture of the collar and a number corresponding to the name of the collar; and a size-indicating part, which in the case of collars, will be numerals indicating the size of the collar. For instance, in Fig. 5, this style-indicating part comprises the number 950 the word "Belmont" with the representation of the

Belmont collar, while in Fig. 6, the style-indicating part of the trademark comprises the number 951, the word "Bemis" and the representation of the Bemis collar. The size-indicating part of the impression is the number indicating the size which in Fig. 5 is "17" while in Fig. 6 it is "15½." It will be understood that in the case of collars, there will be a great variety of sizes of each style so that a complete line of boxes will require the printing of a variety of size-indicating numbers for each of the style-indicating parts of the impression.

I have referred to collars above merely to illustrate the conditions which it is necessary to meet in making these printed impressions but the same conditions would also be met with in printing labels for hose, underwear, shoes and other garments. It will be noted that in the impressions selected to illustrate the invention both the changeable size-indicating part and the changeable style-indicating part of the impression are located within the permanent part thereof, and one of the objects of my invention is to provide a novel printing head capable of making an impression of this kind wherein the changeable parts of the impression are situated within the permanent part and also to provide a printing head in which the printing characters for printing the changeable parts of the impression can be easily and quickly changed.

In the embodiment of the invention herein shown the type for printing the permanent and changeable parts of the impression are supported in the arms 5 of a forked head 6, the latter being sustained by a plunger or holder 7 by which the printing head is moved toward and from the platen, (not shown). The permanent parts of the impression which is the same for all impressions and which in the embodiment herein shown includes the border 1 with the mark 2, is printed from a type plate 3 having a printing face properly cut or formed to make the desired unchangeable impression. This plate is shown as removably sustained in a holder 8 which is secured to a block 4 that is carried by the forked head 6. This holder 8 may be secured to the block in various ways without departing from my invention so long as it is so supported to permit of proper adjustment of the type members for printing the changeable parts of the impression.

The style-indicating part of the impression is shown as being printed by a type plate 9 which is removably sustained by the type plate 3, while the size-indicating part of the impression is shown as being printed by a rotary type carrying members depending on the number and variety of sizes which are to be printed. In the present embodiment of my invention, I have shown two type carrying members 10 and 11 respectively said members being in the form of type wheels which are rotatably mounted on a sleeve 12 carried by the arms 5. Each type wheel is formed with teeth 13 on the faces 14 of which the type are formed. The printing characters of the type wheel 10 are designed to designate whole numbers, while the printing characters of the type wheel 11 are designed to indicate the ½ and ¼ sizes, although this particular arrangement is not essential to the invention.

In order to permit the size-indicating character to be printed within the border 1 and closely adjacent to the style-indicating characters, I have provided a construction whereby the teeth 13 of the size-indicating type wheels can project through an opening in the type plates 3 and 9 and whereby said type plates can be swung into inoperative position to permit the adjustment of the type wheels.

Referring in more detail to the construction of the type plates 3 and 9, it will be seen that the type plate 3 has beveled the edges 15 and that the holder 8 has undercut lips 16 and 17 which engage the beveled edges 15 and retain the plate 3 in position. The undercut lip 16 is shown as integral with the holder 8 while the lip 17 is in the form of a resilient plate which is detachably secured to the holder by screws 19 and which yieldingly holds the type plate 3 in position. The lips 16 and 17 form in effect a dove-tail groove into which the type plate 3 can be slipped from one end of the holder. The type plate 3 is cut out in its central portion to receive the type plate 9, said type plate 3 being herein shown as having the shoulders 20 to receive the wings or extensions 21 on the plate 9. The plate 9 is thus clamped between the shoulders 20 and the holder 8 when the type plate 3 is in position in the said holder. When the type plate 3 is removed from the holder 8, however, then the type plate 9 can be removed and another type plate carrying different style-indicating characters may be inserted in its place. The type plates 3 and 9 are so constructed as to leave an aperture 22 therein of a size to receive one of the teeth 13 of each of the type wheels 10 and 11. This aperture 22 may be placed in any position where it is desired to have the size-indicating character appear and in the embodiment of the invention herein shown, the aperture comes adjacent one corner of the impression and the type plate 9 is cut away at one corner to form said aperture 22. The teeth 13 of the type wheels 10 and 11 are of sufficient length to project down through the holder 8 and both type plates, so as to bring the surfaces 14 thereof in proper position to print.

In order to permit the type wheels 10 and 11 to be turned to bring different printing

characters thereon into operative position it is necessary to remove the teeth of the type wheels from the aperture 22, and I provide for this herein by pivotally connecting the holder 8 to the block 4 as shown at 23, the pivotal point 23 being preferably situated at the opposite end of the holder from that in which the hole 22 will be placed, although this is not essential. Where the holder 8 is thus pivoted to the block 4, said holder can be swung downwardly, thereby carrying the said plate entirely away from the type wheels 10 and 11. When this is done, then the type wheels are free to be turned about the sleeve 12 to bring any type character thereon into adjusted position.

Where the device is designed for use in printing on collar boxes, the various teeth 13 of the type wheel 10 will have printing characters thereon constructed to print numbers such as "13," "14," "15," "16," "17," etc., while the printing wheel 11 will have thereon printing characters constructed to print fractions, such for instance, as "¼", "½", "¾".

With the construction above described it will be observed that when the holder 8 and type plates 3 and 9 are in their operative position, they operate to lock the type wheels 10 and 11 from turning. It will furthermore be noted that the teeth 13 of the wheels 10 and 11 operate to hold the type plates 3 and 9 in their proper position in the holder 8.

Any suitable means for turning the type wheels to bring the different type thereon into adjusted position may be employed. As herein shown the type wheel 11 has secured thereto a handle 25 by which it can be turned whenever the holder 8 is swung downwardly out of locking engagement with the type wheel. I have also shown a resilient locking device in the form of a pin 26 which is slidably mounted in an aperture in one of the arms 5 and is adapted to engage in any one of a number of apertures 27 formed in the side of the type wheel 11, said pin being acted on by a leaf spring 28 secured to the forked head.

For turning the wheel 10, I have provided an actuating finger 29 pivoted to the block 4 at 30 and adapted to engage ratchet teeth 31 formed on the side of the type wheel 10, said ratchet teeth being so disposed that when the handle 32 of the lever 29 is depressed the type wheel 10 will be turned.

33 and 34 are stops which limit the swinging movement of the lever 29 to the distance required to advance the wheel 10 one tooth. The lever 29 is actuated by a spring 35 which normally tends to hold it in the position shown in Fig. 1 and the pivotal connection between said lever and the block 4 is such as to allow the lever to have a lateral movement sufficient to click over the ratchet teeth 31 upon the backward movement of the lever.

36 is a spring-pressed locking pin operating in a housing 37 on the block 4 and adapted to engage in one of a number of recesses in the side of the wheel 10, said pin being acted upon by a leaf spring 38, which is secured to a bracket 39 secured to the head 6. In order to swing the holder 8 from its operative to its inoperative position, I have provided herein an actuating lever 40 pivoted to the head 6 at 41 and connected by a link 42 with the holder 8. By depressing the outer end of the lever 40, the holder 8 will be swung downwardly out of operative locking engagement with the teeth of the wheels 10 and 11 thereby unlocking said wheels so as to permit them to be adjusted. The lever 40 is acted on by a spring 44 which normally holds the holder 8 in its operative position. Sometimes it is desirable to heat the type so as to make a hot impression and when such is the case, I propose to introduce a heating element such, for instance, as an electrically-heated unit 45, into the hollow sleeve 12 by which the type may be maintained hot.

The operation of this device will be readily understood from the above. When the type is properly set the printing is performed in usual manner. If it is desired to adjust either one of the type wheels 10 or 11, the handle 40 will be depressed to unlock the type wheels and then the said type wheels can be adjusted by means of the levers 29 or 25 as the case may be. After the type wheels are adjusted, the holder 8 is returned to its normal position as shown in Fig. 1, in which position it locks the type wheels from movement. If, on the other hand, the printing plate 9 is to be changed then the holder 8 is depressed out of engagement with the type wheels, the type plate 3 is removed from the holder and then the type plate 9 is removed from the type plate 3 and another type plate substituted therefor, when the parts can be replaced into their operative position.

By means of this invention, it is possible to make a series of printed impressions having different style and size-indicating characters thereon but all having the same permanent character and to so arrange the style or size-indicating characters that they will be printed closely adjacent to the permanent part of the impression. Moreover, such printed impressions can be made directly on the collar boxes, thus obviating the necessity of first printing labels and then applying the labels to the boxes.

While in order to illustrate the invention I have described it as it might be used for printing on collar boxes, yet I desire to state that with proper modifications, the in-

vention is equally applicable for printing appropriate impressions on other articles of wear or for printing any labels, cards, etc., where a part of the printed matter is common to all the labels and a part is varied for the different labels. I have herein shown and described an illustrated embodiment of the invention only and do not wish to be limited to the constructional features shown.

Having fully described my invention, what I claim as new and desire to secure by Letters Patent is:

1. In a printing machine, the combination with a head, of a type wheel rotatably mounted thereon, a holder movably secured to the head, a type plate removably carried by the holder, a second type plate removably sustained by the first type plate, said type plates having an opening to receive a tooth of the type wheel thereby to lock the latter from rotation.

2. In a printing machine, the combination with a head, of a type wheel rotatably mounted thereon, a holder movably secured to the head, said holder having ways, a type plate slidably sustained in said ways and provided with an opening to receive a tooth of the type wheel, said tooth locking the type plate in position.

3. In a printing machine, the combination with a head, of a type wheel rotatably mounted thereon, a holder movably secured to the head, said holder having ways, a type plate slidably sustained in said ways and provided with an opening to receive a tooth of the type wheel, said tooth locking the type plate in position, and a handle pivoted to the head and connected to said holder whereby the latter may be moved into a position to carry the type plate out of engagement with the type wheel.

4 In a printing machine, the combination with a head, of a type wheel rotatably mounted thereon, a holder pivotally secured to the head, a type plate removably sustained by the holder and having an opening to receive a tooth of the type wheel, a handle pivoted to the head and connected to the holder whereby the latter may be moved into a position to carry the type plate out of engagement with the type wheels and a spring acting on said handle for yieldingly retaining the holder in operative position.

5. In a printing machine, the combination with a head, of a type wheel rotatably mounted thereon, a holder movably secured to the head and provided with ways, a type plate slidably sustained in said ways, and a second type plate removably sustained by the first type plate, said plates engaging a tooth of the type wheel, thereby locking the latter from rotation and said tooth holding said plates in position in the holder.

6. In a printing machine, the combination with a head, of a type wheel rotatably mounted thereon, a holder movably secured to the head and provided with ways, a type plate slidably sustained in said ways, a second type plate removably sustained by the first type plate, said plates engaging a tooth of the type wheel, thereby locking the latter from rotation and said tooth holding said plates in position in the holder and means to move the holder away from the type wheel to permit the latter to be adjusted.

7. In a printing machine, the combination with a head, of a type wheel rotatably mounted thereon, and provided with ratchet teeth, a lever pivoted to the head and adapted to engage said ratchet teeth for setting the type wheel, a holder pivoted to the head, a type plate removably sustained by the holder, said plate engaging a tooth of the type wheel, thereby locking the latter from rotation and said tooth holding the type plate in position in the holder.

8. In a printing machine, the combination with a head, of a type wheel rotatably mounted thereon a holder movably secured to the head, a type plate removably sustained by the holder, said plate engaging a tooth of the type wheel thereby locking the latter from rotation, said tooth holding said plate in position in the holder.

9. In a printing machine, the combination with a head, of a type wheel rotatably mounted thereon, a holder movably secured to the head, a removable type plate carried by the holder, a second type plate removably sustained by the first type plate, said plates engaging a tooth of the type wheel thereby locking the latter from rotation.

10. In a printing machine, the combination with a head, of a type wheel rotatably sustained thereby, a holder movably secured to the head, a type plate sustained by the holder and having an opening to receive the tooth of the type wheel, the engagement of the type plate with the tooth of the type wheel locking the latter from rotary movement, and said tooth locking the type plate in the holder.

In testimony whereof, I have signed my name to this specification in the presence of two subscribing witnesses.

CHARLES F. ROBBINS.

Witnesses:
LOUIS C. SMITH,
THOMAS J. DRUMMOND.