Nov. 29, 1927. 1,651,061

J. T. JANETTE

MOTOR CONSTRUCTION.

Filed Dec. 15, 1924

Fig. 1.

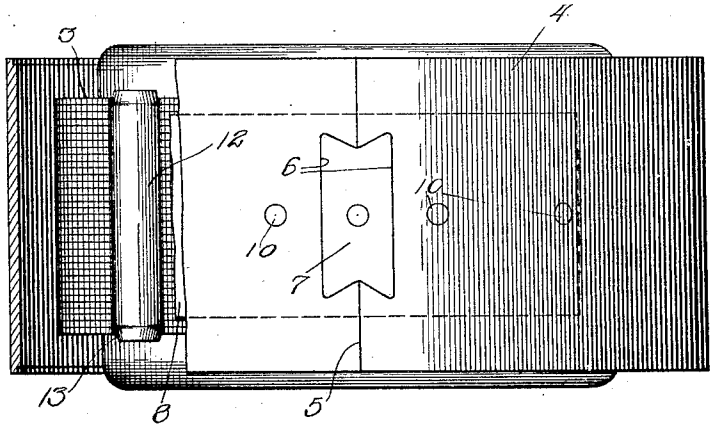

Fig. 2.

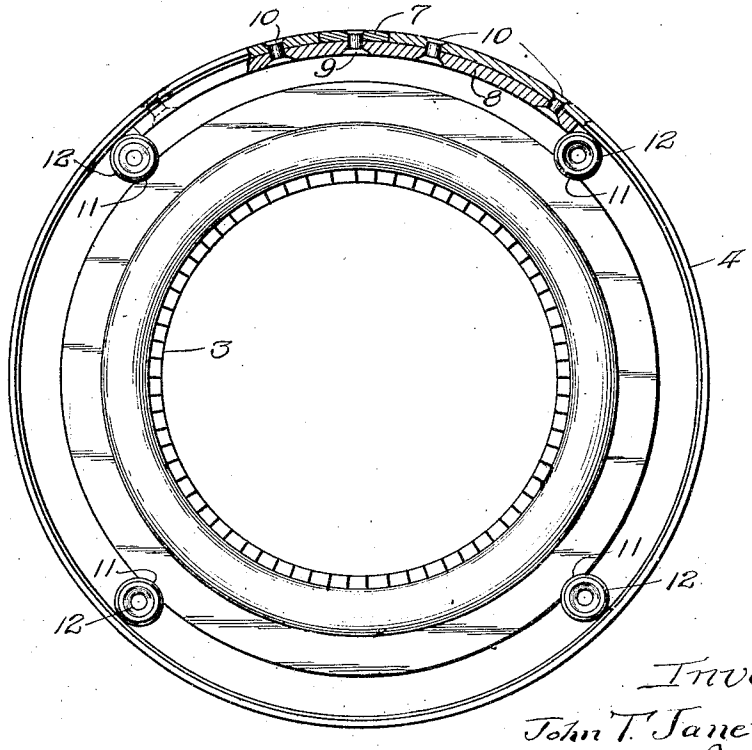

Inventor:
John T. Janette
By Glenn B. Noble
Atty.

Patented Nov. 29, 1927. 1,651,061

UNITED STATES PATENT OFFICE.

JOHN T. JANETTE, OF CHICAGO, ILLINOIS.

MOTOR CONSTRUCTION.

Application filed December 15, 1924. Serial No. 755,959.

While certain features of this invention may be utilized for general purposes, it is more particularly directed to motors of the type operated by alternating current. Heretofore, such motors have usually been constructed with cast frames in which the stators are mounted. These frames must be made comparatively heavy and require a considerable amount of machining in order to properly finish the same and to provide suitable means for attaching the stators. Instead of such cast frame, the present invention provides a frame made of sheet metal or the like and means for readily mounting the stators therein.

Among the objects of this invention are to provide an improved alternating current motor construction; to provide an electric apparatus of the motor or generator type with a frame formed of sheet metal; to provide means for centering and mounting a stator in a tubular frame or support; and in general, to provide such features of construction as will appear more fully hereinafter.

In the accompanying drawings illustrating a preferred form of this invention, Figure 1 is a side view with parts broken away to show the interior construction; and Figure 2 is an end view also with parts broken away.

The stator 3 or non-rotatable portion of the motor may be of any ordinary or preferred form of construction and is shown as being built up of laminations in the usual manner. My improved frame 4 which supports the stator is made of drawn or sheet metal or preferably sheet steel and of tubular or cylindrical shape as shown. In order to cheapen the construction, as well as for other purposes which will presently appear, I prefer to make a frame of a flat strip of steel and punch or roll the same into the form desired.

The ends 5 of the blank from which the frame is formed are provided with undercut recesses 6 for receiving a key 7 which is substantially V-shaped at the ends in order to fit in the adjacent recesses to lock the parts together. The key 7 is secured to a splice or inner strip 8 by means of a rivet 9 or in any other suitable manner. The splice or reenforcing strip 8 engages closely with the adjacent ends of the band or ring 4 and is secured thereto by means of rivets 10.

The stator 3 has longitudinal grooves 11 in its outer surface for receiving studs or spacing members 12 which are used for holding it in position in the frame 4. While I have shown four of these studs, which is sufficient for a small motor, any desired number may be used. These studs or spacing members are conveniently made from cold rolled steel rods and are tapped at the ends for receiving screws for holding the end frames (not shown). The splice plate, or reenforcing strip 8 is made of proper length so that two of the studs or pins 12 will engage with the ends thereof, as clearly shown in Figure 2. It is desirable to have the stators always positioned in the same relative circumferential location with respect to the split in the frame 4 so that the splices 8 serve as a convenient means for properly locating the stators. Furthermore, the ends of these splices provide abutments to prevent any possibility of rotation or circumferential movement of the stators in the frames. The ends of the pins or studs 12 are preferably slightly tapered, as shown at 13, for convenience in driving them into position. The parts may be arranged so that the pins or studs will have a comparatively tight fit and the frame 4, which is comparatively thin, will yield sufficiently to permit the pins to be driven into position and will hold them firmly in place.

It will be seen that my improved motor construction provides an exceedingly light frame which may be cheaply made and which requires no finishing. Furthermore, as the pins or studs 12 occupy but little room, ample ventilating space is provided between the stator and the frame and as the material of the frame is a good conductor of heat, it will assist in keeping the motor properly cooled.

Various changes may be made in the details of construction and arrangement of parts in order to adapt the motor for different conditions or for different sizes and therefore I do not wish to be limited to the exact construction or arrangement herein set forth, except as specified in the following claims:

1. A frame member of the character set forth, comprising a ring formed of a single strip of sheet metal having undercut recesses in the ends thereof, a key fitting in said recesses and a splice engaging with the key and the adjacent ends of the ring.

2. In a motor construction, the combina-

tion with a stator having longitudinal grooves in its outer surface, of a frame comprising a ring formed of sheet steel with a splice connecting the ends thereof and studs interposed between the stator and the ring, said studs fitting in said grooves, two of said studs engaging with the ends of the splice.

3. A motor construction comprising a resilient ring, a stator mounted in said ring, spacing members inserted between the stator and the ring and adapted to centralize the stator within the ring, said ring having an abutment for engagement with one or more of the spacing members for preventing rotary movement thereof, and the stator having recesses for receiving said spacing members.

4. In a motor construction, the combination of a resilient annular frame member having an abutment on its inner surface, a stator, and pins inserted between the stator and frame member for centralizing the stator, one or more of said pins engaging with said abutment to hold the stator from turning in the frame member.

5. The combination of a resilient annular frame member, a splice connecting the ends of said member, a stator having longitudinal grooves therein and pins engaging with the grooves in the stator and the frame member, two of said pins engaging with the ends of said splice for preventing rotation of the stator in the frame, said pins having holes in the ends thereof for securing end frame members thereto, substantially as described.

JOHN T. JANETTE.