Oct. 19, 1954 R. B. LARKIN, JR 2,692,113

AUTOMATIC SOLENOID VALVE CLOSING DEVICE

Filed March 15, 1952

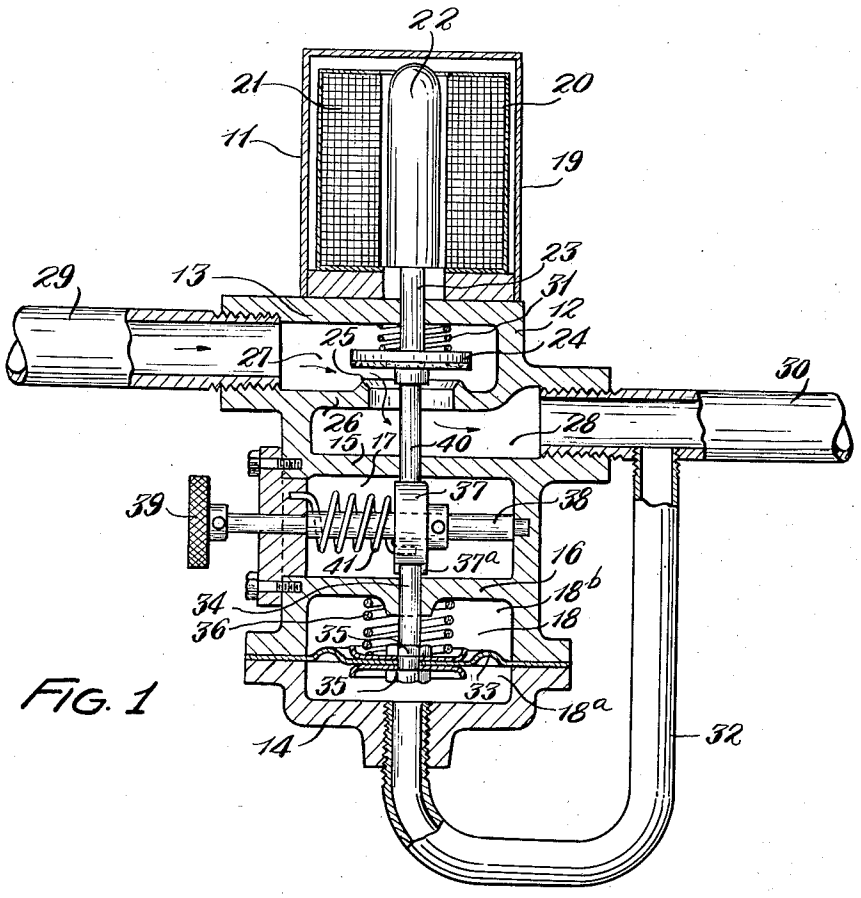

FIG. 1

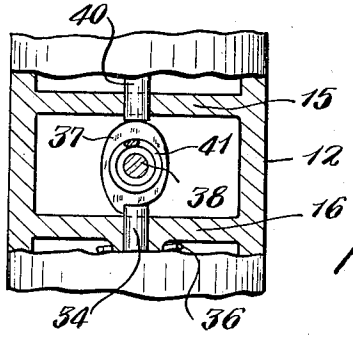

FIG. 2

INVENTOR.
Robert B. Larkin, Jr.
BY Walter C. Kelsey
ATTORNEY

Patented Oct. 19, 1954

2,692,113

UNITED STATES PATENT OFFICE

2,692,113

AUTOMATIC SOLENOID VALVE CLOSING DEVICE

Robert B. Larkin, Jr., Bay Village, Ohio, assignor to The Patrol Valve Company, Cleveland, Ohio

Application March 15, 1952, Serial No. 276,890

7 Claims. (Cl. 251—73)

1

This invention relates to solenoid valves, and more particularly, to a mechanism for automatically restoring the manually-operated mechanism of a solenoid valve, fluid-controlling valve, to its closed position upon termination of the flow of fluid to the device, after the solenoid valve has been opened manually.

The use of solenoid valves for automatically controlling gas flow to gas oven burners and the like is common practice, and such valves, in the event of a power failure, will close and will not open again until current flow is reestablished. Manual control means are frequently used permitting the opening of the valve by hand so that the flow of gas may be continued during the continuation of power failure. When such solenoid valve is used, for example, in a gas oven unit wherein the solenoid valve is responsive to a safety pilot provided with electric ignition means, certain objectionable and dangerous situations may result. The usual procedure, upon power failure in such cases, is to turn the manual gas valve to open position and then lift the valve of the solenoid by mechanical means and then ignite the gas burner with a match. Upon completion of the use of the oven, the manual control valve upstream from the solenoid, is manually shut off, and the solenoid valve must be reset to its off position by manually releasing the mechanism holding the solenoid in its open position.

In most automatic oven control systems the solenoid valve is positioned within the range body, where it may be readily forgotten and left in its open position at the termination of the use of the range. It follows, that if at the time of the next subsequent use of the oven, the solenoid valve has not been reset to its "off" position, gas will be permitted to flow directly to the oven burner the instant the manual oven control valve is opened. In the event that the flow of electric current has not been established to ignite the pilot flame before the subsequent use of the oven, a dangerous quantity of raw gas accumulates in the range oven creating the possibility of an explosion. If the flow of current has been reestablished, the electrical ignition coil will be energized at the same time that gas is admitted to the oven burner, and due to the excessive volume of gas present, ignition may be delayed, and finally when ignition is accomplished, an objectionable concussion may occur.

Therefore, an object of this invention is to provide means for resetting automatically a solenoid gas control valve to its closed position, whenever the flow of gas to a stove or furnace is shut

2

off by the manual control valve regulating the flow of gas to the solenoid valve, in order that, if perchance the solenoid valve has been manually opened during a power failure, and has not been manually closed before the next use of the stove, the solenoid valve will be automatically returned to its closed position and no gas will be permitted to flow to the oven until the burner is ignited by the regular ignition cycle, and the solenoid valve is opened thereby.

Other objects of the invention are to provide a relatively low cost, safety means for automatically closing a solenoid valve whenever the manual gas supply valve is closed, such means being positive in action and requiring few parts requiring adjustment or replacement.

These and other objects will be apparent during the course of the following specification.

In the drawings, forming a part of this specification:

Fig. 1 is a vertical sectional view through an illustrative embodiment of my invention including gas conduits connected thereto; and

Fig. 2 is a sectional view taken on the lines 2—2 of Fig. 1, showing the cam means for opening the solenoid valve.

The device illustrated herein is adapted to be used to regulate the flow of gas to a gas range cooking oven having a solenoid valve responsive to a safety pilot, and ignited electrically. Obviously this invention is adapted to be used to regulate the flow of gas to many devices other than range ovens.

In the drawings the numeral 11 refers generally to a gas control valve comprising an outer valve casing 12, including a top wall 13, bottom wall 14, and two intermediate walls 15 and 16 dividing the casing 12 into an upper chamber 17 and a lower chamber 18, respectively, while a solenoid casing 19 mounted on the top of the valve casing 12 encloses a conventional solenoid structure 20, having a magnetic field 21 and a vertically reciprocable core 22 having a valve stem 23 depending from its lower end. A valve 24, mounted on the valve stem 23 is adapted to close a valve seat 25 provided in a wall 26 dividing the upper half of the valve casing into an inlet chamber 27 and an outlet chamber 28.

A gas supply conduit 29 admits a gaseous fuel mixture to inlet chamber 27 from where it passes through the valve 24 into the outlet chamber 28 and then through fuel conduit 30 leading to an oven burner of a range oven not shown herein. A manually operated control valve, usually lo-

cated at the front of the stove and not shown herein, regulates the flow of gaseous fuel in the supply conduit 29 in an obvious manner. A valve spring 31 mounted around the valve stem 23 serves to urge the valve 24 against the seat 25 so that the valve 24 is closed when no current flows to the solenoid, and no gaseous fuel passes from the inlet chamber 27 to the chamber 28, connected to the oven burner.

A control conduit 32, connecting the fuel supply conduit 30 to the bottom wall 14 of the casing, serves to equalize the pressure in the chamber 18 with the fuel pressure in fuel supply conduit 29, while a diaphragm 33 formed of some suitable material, and extending across the lower chamber 18 divides it into a pressure responsive chamber 18*a* in communication with the control conduit 32 and a sealed chamber 18*b*.

A latch rod 34, secured at its lower end to the diaphragm 33 by nuts 35, is surrounded by a spring 36 urging the diaphragm 33 downwardly. The upper end of the latch rod 34, bearing against a cam 37, having a latch ratchet 37*a*, is mounted on a cam shaft 38, rotatably mounted in chamber 17, while a hand knob 39 mounted on the outer end of the cam shaft 38 is adapted to be rotated by hand. A torsion spring 41 mounted around the cam shaft 38, and having one end mounted in the casing wall 12 and its other end secured to the cam 37, serves to rotate the cam 37 in a counter-clock direction 90° from the position shown in the drawings, wherein the high point of the cam 37 is at the top, to a position wherein the low point of the cam 37 is at the top.

A follower shaft 40, extending through the casing wall 15 and resting on the cam 37 at its lower end, serves to open the valve 24 against the tension of valve spring 31 when it rests on the high point of the cam 37, and permits the valve 24 to close when it rides on the low point of the cam 37. The latch ratchet 37*a* and the latch rod 34 are positioned and arranged in such manner that when the diaphragm 33 is retained in the position shown in Fig. 1, by the pressure of gas in the chamber 18*a*, when the valve 24 is open, the latch ratchet 37*a* retains the cam 37 in the position shown. When however the operator closes the manual valve supplying gas to the fuel conduit 29, the pressure in the chamber 18*a* will drop, thus causing the diaphragm 33 to drop withdrawing the latch ratchet 37*a* from its engagement with the cam 37, whereupon the torsion spring 41 will rotate the cam 90° in a counter-clockwise manner, causing the low point of the cam 37 to be at the top, and thus the follower shaft 40 urged downwardly by the valve spring 31 will close the valve 24, thereby shutting off the flow of gas to the range oven through the conduit 30. The flow of gas to the oven burner may be restored by the normal operation of the solenoid valve 12 lifting the valve 24 from its seat 25 permitting gas to flow to the oven burner, the operation of the solenoid valve being well understood in the art. If desired, the solenoid valve may be one element of an automatic oven burner ignition cycle, including electric pilot ignition means from which the oven burner is ignited.

Should the closing of the solenoid valve 11 be the result of an electric power failure automatically closing the solenoid valve 12, and the operator desires to use the oven during the period of such power failure, the operator turns hand knob 39 in a clockwise direction 90° until the latch ratchet 37*a* is in engagement with the upper end of the latch rod 34, at which time the high point of the cam 37 will lift the follower shaft 40 upwardly, thus forcing the valve 24 from its seat 25 and thereby permit gas to flow to the oven burner through conduit 30. This permits a flow of gas through control conduit 32 to the chamber 18*a* to retain the diaphragm 33 in the position shown in the drawings, which retains the latch rod against the latch ratchet 37*a* of the cam 37. Shutting the main manual gas control valve will cause a pressure drop under the diaphragm 33 permitting it to drop, thus withdrawing the follower shaft 40 from its engagement with the cam ratchet 37*a*, which permits the torsion spring 41 to rotate the cam 37 in a counter-clockwise direction 90° causing the low point of the cam 37 to be at the top. The follower shaft then rides downwardly permitting the valve spring 31 to close the valve 34.

Thus it will be seen that this invention provides means for the normal functioning of a solenoid gas control valve, and also provides means for manually lifting the solenoid control valve during a power failure so that the oven burner may be ignited by a match. In addition thereto, means are provided for automatically closing the solenoid valve, which are caused to function whenever the main gas supply valve is shut off. After the closing of the solenoid valve, as above described, the device is in condition to function through the normal cycle of automatic operations.

It will be apparent to those skilled in the art that the embodiment of my invention disclosed herein is illustrative only and that the invention may be variously changed, used or modified without departing from the spirit of the invention or sacrificing the advantages thereof.

I claim:

1. A combination solenoid and manually operated valve comprising, a solenoid valve normally controlling the flow of fluid from an inlet conduit into an outlet conduit, means for manually opening said valve in the event of failure of the solenoid to operate said valve, a diaphragm in fluid connection with said outlet conduit, and means associated with said diaphragm and said manual control means for retaining said valve in its open position after it has been manually opened as long as there is fluid pressure against said diaphragm, the disposition arrangement of said diaphragm and associated parts permitting said valve to close upon termination of fluid pressure against said diaphragm, thus restoring said valve to its normal solenoid operation.

2. A combination solenoid and manually operated valve comprising, a solenoid valve normally controlling the flow of fluid from an inlet conduit into an outlet conduit, means for manually opening said valve in the event of failure of the solenoid to operate said valve, including a cam and follower and an operating handle, a diaphragm in fluid connection with said outlet conduit, and means associated with said diaphragm and said cam and follower for retaining said valve in its open position after it has been opened manually as long as fluid under pressure is supplied said diaphragm by said outlet opening, the disposition arrangement of said diaphragm and associated parts permitting said valve to close upon termination of fluid pressure against said diaphragm, whereby said valve is restored for normal solenoid operation.

3. A combination solenoid and manually operated valve comprising, a solenoid valve controlling the flow of fluid from an inlet conduit

to an outlet conduit, a diaphragm in fluid connection with said outlet conduit, cam means adapted to be manually operated for opening said valve, means disposed on said cam for locking it in its valve-opening position, means mounted on said diaphragm for engaging said cam locking means, said diaphragm being positioned and arranged in such manner that it retains said cam engaging means in its cam engaging position after it has been manually opened by fluid pressure against said diaphragm supplied through said outlet conduit and upon termination of such fluid pressure against said diaphragm said diaphragm carries said cam engaging means from said cam, and means for returning said cam to its valve closing position upon release of said pressure, whereby said valve is restored to normal solenoid operating position.

4. A combination solenoid and manually operated valve comprising, a solenoid valve controlling the flow of fluid from an inlet conduit to an outlet conduit, a diaphragm in fluid connection with said outlet conduit, cam means adapted to be manually operated for opening said valve, a ratchet on said cam for locking it in its valve opening position, a latch rod mounted on said diaphragm at one end and at its opposite end engaging said cam ratchet, said diaphragm being positioned and arranged in such manner that it retains said rod in its cam engaging position after it has been manually opened by fluid pressure against said diaphragm supplied through said outlet conduit, and upon termination of fluid pressure against said diaphragm said diaphragm carries said latch rod away from said cam, and means for returning said cam to its valve closing position upon release of said pressure, whereby said valve is restored to normal solenoid operating position.

5. A combination solenoid and manually operated valve comprising, a solenoid valve normally controlling the flow of fluid from an inlet conduit into an outlet conduit, a rotatable cam and follower means for manually opening said valve in the event of failure of the solenoid to operate said valve, a diaphragm in fluid connection with said outlet conduit, means mounted on said diaphragm for locking said cam in its valve-opening position after it has been manually opened and retaining it open as long as there is fluid pressure against said diaphragm, the disposition arrangement of said diaphragm and associated parts causing said cam locking means to release said cam upon termination of fluid pressure against said valve after it has been opened manually, thus restoring said valve to its normal solenoid operation.

6. A combination solenoid and manually operated valve comprising, a solenoid valve normally controlling the flow of fluid from an inlet conduit into an outlet conduit, a rotatable cam and follower means for manually opening said valve in the event of failure of the solenoid to operate said valve, a diaphragm in fluid connection with said outlet conduit, means mounted on said diaphragm for locking said cam in its valve-opening position as long as there is fluid pressure against said diaphragm, the disposition arrangement of said diaphragm and associated parts causing said cam locking means to release said cam upon termination of fluid pressure against said valve, and means for returning said cam to its normal non-valve-opening position upon release of said cam locking means, after it has been opened manually, thus restoring said valve to its normal solenoid operation.

7. A combination solenoid and manually operated valve comprising, a solenoid valve normally controlling the flow of fluid from an inlet conduit into an outlet conduit, a cam and follower means for manually opening said valve in the event of failure of the solenoid to operate said valve, a ratchet locking means disposed on said cam, a diaphragm in fluid connection with said outlet conduit, a latch rod mounted on said diaphragm for locking with said cam ratchet and thus retain said cam in its valve-opening position, the construction and arrangement of said diaphragm being such that it retains said latch rod in locked relation with said cam ratchet after the valve has been opened manually only, during that interval when there is appreciable fluid pressure against said diaphragm, whereby upon termination of such fluid pressure said diaphragm moves away from said cam sufficiently to carry said latch rod from its locked relation with said cam ratchet, and means for restoring said cam to its normal non-valve-opening position upon release of said cam ratchet, whereby said manually operated means are inoperative and the valve is restored to normal solenoid operation.

References Cited in the file of this patent

UNITED STATES PATENTS

Number	Name	Date
2,269,016	Gille	Jan. 6, 1942
2,396,815	Blum	Mar. 19, 1946